BOX 06A

BOOK
19 1 OF 2

#211

# JOB TRACKING PRODUCTION ORDER

Company Name: _____ **DATE:** _____

Order #: _____

| | | **INITIALS:** |
|---|---|---|
| ☐ | Hold Drawings & Update Files | _____ |
| ☐ | Print Order | _____ |
| ☐ | Return Superceded Originals | _____ |
| ☐ | Return Originals | _____ |
| ☐ | Packed & Shipped | _____ |

Date Sent: _____

Time Sent: _____ a.m. ☐ p.m. ☐

**COMMENTS:**

_____

_____

_____

Just clipped pages
19-AB-974.1-.3

- type up cover page
- cover page gets copied on cover stock

WTC DRAWING
BOOK 19
AB-1–K-1055

**SKILLING, HELLE, CHRISTIANSEN, ROBERTSON** — **Structural & Civil Engineers**

PROJECT: THE WORLD TRADE CENTER | TITLE: DRAWING BOOK 19 - REVISIONS AFTER FABRICATION | DATE: 5/18/73

SIONS

| DWG. NO. | TITLE | DATE |
|---|---|---|
| 19-AB- 0.1 | INDEX & DATE PAGE | 5/18/73 |
| 19-AB- 0.2 | INDEX & DATE PAGE | 5/18/73 |
| 19-AB- 0.3 | INDEX & DATE PAGE | 5/18/73 |
| 19- AB- 0.4 | INDEX & DATE PAGE | 5/18/73 |
| 19- AB- 0.5 | INDEX & DATE PAGE | 5/18/73 |
| 19-AB- 1 | GEN NOTES | 3/12/69 |
| 19-A -900 | DETAIL 900 | 8/15/68 |
| 19-A -901 | DETAIL 901 | 8/15/68 |
| 19-A -903 | DETAIL 903 | 8/15/68 |
| ~~19-A -904~~ | ~~DETAIL 904~~ | ~~8/15/68~~ |
| 19-A -905 | DETAIL 905 | 8/15/68 |
| 19-A -906 | DETAIL 906 | 8/15/68 |
| 19-A -907 | DETAIL 907 | 8/15/68 |
| 19-A -908 | DETAIL 908 | 8/15/68 |
| 19-A -909 | DETAIL 909 | 8/15/68 |
| 19-A -910 | DETAIL 910 | 8/15/68 |
| 19-A -911 | DETAIL 911 | 8/15/68 |
| 19-AB-912 | DETAIL 912 | 10/ 7/68 |
| 19-B -913 | DETAIL 913 | 10/ 9/68 |
| 19-A -914 | DETAIL 914 | 11/20/68 |
| 19-AB-915 | DETAIL 915 | 11/29/68 |
| 19-B -916 | DETAIL 916 | 1/ 3/69 |
| 19-A -918 | DETAIL 918 | 1/15/69 |
| 19-AB-919 | DETAIL 919 | 1/17/69 |
| 19-AB-920 | DETAIL 920 | 1/17/69 |
| 19-A -921 | DETAIL 921 | 1/27/69 |
| 19-A -922 | DETAIL 922 | 3/19/69 |
| 19-AB-923 | DETAIL 923 | 3/19/69 |
| 19-AB-923.1 | DETAIL 923 | 3/19/69 |
| 19-AB-925 | DETAIL 925 | 3/13/69 |
| 19-A -926 | DETAIL 926 | 3/14/69 |
| 19-AB-927 | DETAIL 927 | 3/21/69 |
| 19- B-928 | DETAIL 928 | 5/ 9/69 |
| 19-A -929 | FL 2 TOWER A | 6/13/69 |
| 19-K -929.1 | REV.TROLLEY BM.SUPPT. | |
| 19-K -929.2 | REV.TROLLEY BM.SUPPT. | |
| 19-AB-930 | DETAIL E 53 | 6/10/69 |
| 19-AB-931 | DETAIL 931 | 6/10/69 |
| 19-J -932 | DETAIL H | 6/20/69 |
| 19-AB-951.1 | HOIST SUPPTS | 12/ 7/70 |
| 19-AB-951.2 | HOIST SUPPTS | 12/ 7/70 |
| 19-AB-951.3 | HOIST SUPPTS | 12/ 7/70 |
| 19-AB-951.4 | HOIST SUPPTS | 12/ 7/70 |
| 19-AB-952 | HOIST SUPPTS | 12/ 7/70 |
| 19-AB-953 | HOIST SUPPTS | 12/ 7/70 |
| 19-AB-954 | HOIST SUPPTS | 12/ 7/70 |
| 19-AB-955 | HOIST SUPPTS | 8/11/69 |
| 19-AB-956 | HOIST SUPPTS | 8/11/69 |
| 19-AB-957 | BEAM SEAT 7&9 | 8/20/69 |
| 19-AB-958 | DAMPER CONN | 8/20/69 |
| 19-AB-959 | EXT. WALL | 9/ 2/69 |
| 19-A -961.1 | STR/RPR.FL25. | 12/ 1/69 |
| 19-A -961.2 | STUD RP.FL25. | 12/ 1/69 |
| 19-A -961.3 | STUD RP.FL25. | 12/ 1/69 |
| 19- B-962 | MODI DK SHF | 7/27/70 |
| 19- B-965 | MODI TO BEAM | 4/28/70 |
| 19- B-966 | FL. TRUSS DET | 5/11/70 |
| 19- B-967 | FL107 BM REINF | 6/17/70 |
| 19- B-968 | BM SEAT REP. | 8/ 3/70 |
| 19-A -969.1 | LOUV SUPPTS | 8/ 7/70 |
| 19-A -969.2 | LOUV SUPPTS | 8/ 7/70 |
| 19-A -970.1 | REP OPNG FL7 | 8/ 7/70 |
| 19-A -970.2 | REP OPNG FL7 | 8/ 7/70 |
| 19-A -971 | REP SEP BEAM | 9/25/70 |
| 19-A -972 | FL.77 CONC. | 8/25/70 |
| 19- B-973.1 | HDR DUCT FL44 | 9/28/70 |
| 19- B-973.2 | HDR DUCT FL44 | 9/28/70 |
| 19-AB-974.1 | CORE COL. REINF. FL. 98-106 | 12/ 1/71 |
| 19-AB-974.2 | CORE COL. REINF. FL. 98-106 | 12/ 1/71 |
| 19-AB-974.3 | CORE COL. REINF. FL. 98-106 | 12/ 1/71 |
| 19- B-975 | BM REP.FL59&92 | 10/28/70 |
| 19-A -980 | TEMP TRUSS | 1/ 7/71 |
| 19-A -981.1 | FL CONN DET | 1/ 7/71 |
| 19-A -981.2 | FL CONN DET | 1/ 7/71 |
| 19-A -981.3 | FL CONN DET | 1/ 7/71 |
| 19-A -982.1 | FL 106 BM CPL | 1/ 7/71 |
| 19-A -982.2 | FL 106 BM CPL | 1/ 7/71 |
| 19-A -983.1 | FL.TRUSS C32T1 | 10/ 6/71 |
| 19-A -983.1A | FL.TRUSS C32T1 | 10/ 6/71 |
| 19-A -983.1B | FL.TRUSS C32T1 | 10/ 6/71 |
| 19-A -983.2 | FL.TRUSS C32T1 | 10/ 6/71 |
| 19-A -983.2A | FL.TRUSS C32T1 | 10/ 6/71 |
| 19-A -983.3 | FL.TRUSS C32T8 | 10/ 6/71 |
| 19-A -983.3A | FL.TRUSS C32T8 | 10/ 6/71 |
| 19-A -983.4 | FL.TRUSS C32T7 | 10/ 6/71 |
| 19-A -983.5 | FL.TRUSS C32T2 | 10/ 6/71 |
| 19-A -983.6 | FL.TRUSS C32T3 | 10/ 6/71 |
| 19-A -983.7 | FL.TRUSS C3/T9 | 10/ 6/71 |
| 19-A -983.8 | FL.TRUSS C32T10 | 10/ 6/71 |
| 19-A -983.9 | FL.TRUSS C32T11 | 10/ 6/71 |
| 19-A -983.10 | FL.TRUSS C32T4 | 10/ 6/71 |
| 19-A -983.11 | FL.TRUSS C32T13&T6 | 10/ 6/71 |
| 19-A -983.12 | FL.TRUSS C32T5&T12 | 10/ 6/71 |
| 19-A -984.1 | FL.TRUSS FL.106 | 10/ 6/71 |
| 19-A -984.2 | FL.TRUSS FL.106 | 10/ 6/71 |
| 19-A -984.3 | FL.TRUSS FL.106 | 10/ 6/71 |
| 19-A -984.4 | FL.TRUSS FL.106 | 10/ 6/71 |
| 19-A -984.5 | FL.TRUSS FL.106 | 10/ 6/71 |
| 19-A -984.6 | FL.TRUSS FL.106 | 10/ 6/71 |
| 19-A -985.1 | TRUSS DET-FL106 | 10/ 6/71 |
| 19-A -985.2 | TRUSS DET-FL106 | 10/ 6/71 |
| 19-A -985.3 | TRUSS DET-FL106 | 10/ 6/71 |
| 19-A -985.4 | TRUSS DET-FL106 | 10/ 6/71 |
| 19-A -985.5 | TRUSS DET-FL106 | 10/ 6/71 |
| 19-A -985.6 | TRUSS DET-FL106 | 10/ 6/71 |
| 19-A -985.7 | TRUSS DET-FL106 | 10/ 6/71 |
| 19-A-981.0 | 11/30/79 | |
| 19-A-981-X | 10/15/79 | |
| 19-A-982.3 | 10/15/79 | |
| 19-A-982.4A | 5/9/79 | |
| 19-A-984.7 | 5/9/79 | |
| 19-A-984.8 | 1/30/80 | |

LICENSED PROFESSIONAL ENGINEER LESLIE E. ROBERTSON No 34360 CITY OF THE STATE OF NEW YORK

**SKILLING, HELLE, CHRISTIANSEN, ROBERTSON** — **Structural & Civil Engineers**

PROJECT: THE WORLD TRADE CENTER | TITLE: DRAWING BOOK 19 - REVISIONS AFTER FABRICATION | DATE: 5/18/73

SIONS

| DWG. NO. | TITLE | DATE |
|---|---|---|
| 19-A -985.8 | TRUSS DET-FL106 | 10/ 6/71 |
| 19-A -985.9 | TRUSS DET-FL106 | 10/ 6/71 |
| 19-A -985.10 | TRUSS DETAILS-FL.106 | VOID |
| 19-A -986 | FL.106 STUD DETAILS | 1/ 7/71 |
| 19-A -987.1 | FL.106 CONN.DETAILS | 10/ 6/71 |
| 19-A -987.2 | FL.106 CONN.DETAILS | 10/ 6/71 |
| 19-A -987.3 | FL.106 CONN.DETAILS | 10/ 6/71 |
| 19-A -987.4 | FL.106 CONN.DETAILS | VOID |
| 19-A -987.5 | FL.106 CONN.DETAILS | VOID |
| 19-A -987.6 | FL.106 CONN.DETAILS | 10/ 6/71 |
| 19-A -988.1 | TRUSS DETAILS FL.106 | VOID |
| 19-A -988.2 | TRUSS DETAILS FL.106 | VOID |
| 19-A -989.1 | TRUSS DETAILS FL.106 | VOID |
| 19-A -989.2 | TRUSS DETAILS FL.106 | VOID |
| 19-A -989.3 | TRUSS DETAILS FL.106 | VOID |
| 19-A -989.4 | TRUSS DETAILS-FL.106 | VOID |
| 19-A -990.1 | TRUSS DETAILS FL.106 | VOID |
| 19-A -990.2 | TRUSS DETAILS FL.106 | VOID |
| 19-A -990.3 | TRUSS DETAILS FL.106 | VOID |
| 19-A -991.1 | LOUVER SUPPORT FL108 | 2/ 5/71 |
| 19-A -991.2 | LOUVER SUPPORT FL108 | 2/ 5/71 |
| 19- B-992 | BM.ST.REP.TWR.B FL107 | 3/15/71 |
| 19- B-993 | BM.ST.REP.TWR.B FL107 | 3/15/71 |
| 19- B-994 | COL.SPLICE REP FL107 | 3/15/71 |

| DWG. NO. | TITLE | DATE |
|---|---|---|
| 19-A -995 | FLD.REP.SPANDL.EL.310 | 3/19/71 |
| 19-AB-996.1 | TRUSS BOT.CHD.BM.CONN | 4/15/71 |
| 19-AB-996.2 | TRUSS BOT.CHD.BM.CONN | 4/15/71 |
| 19-AB-998 | NEW PLK.WALL SUPPT-IL | 6/ 8/71 |
| 19-AB-999 | FLD.INSTL.BMS WW LIFT | 7/ 2/71 |
| 19-A -1001 | 245 A 12-9 | 6/ 5/69 |
| 19-AB-1002 | 245 A 12-9 | 6/ 5/69 |
| 19-AB-1003 | SEAT DETAIL | 6/ 5/69 |
| 19-AB-1004.1 | COL. SPLICE | 6/20/69 |
| 19-AB-1004.2 | COL. SPLICE | 6/20/69 |
| 19-AB-1005 | SPANDREL SPL. | 6/20/69 |
| 19-A -1010 | PUMP PLATFORM | 8/ 7/69 |
| 19-AB-1011 | PUMP PLATFORM | 8/29/69 |
| 19-B -1012 | PUMP PLATFORM | 8/ 7/69 |
| 19-AB-1013 | PUMP PLATFORM | 8/29/69 |
| 19-J -1020 | PATH TUBE | 8/18/69 |
| 19-K -1025 | STR/BM. TO G. | 10/17/69 |
| 19-K -1026 | MODIF.230.00. | 11/11/69 |
| 19-J -1027 | G. J2A & J2F. | 11/24/69 |
| 19-A -1030 | DETAIL KITC. | VOID |
| 19-K -1031 | SUPPORT TELE. | 3/16/70 |
| 19-K -1035 | OPNG THRU BM. | 6/23/70 |
| 19-K -1036 | TEMP SUPPT | 8/25/70 |
| 19-J -1037 | DETNEW HANG . | 10/ 1/70 |
| 19- K-1038 | REM BMS OVER RAMP ELEV.310 | 12/ 4/70 |
| 19- K-1039.1 | STEEL BEAM REPAIR ELEV.310 | 1/15/71 |
| 19- K-1039.2 | STEEL BEAM REPAIR ELEV.310 | 1/15/71 |
| 19-K-1040.1 | REP.TEMP.GDR. EXP JT | 1/14/71 |
| 19-K-1040.2 | REP.TEMP.GDR. EXP JT | 1/14/71 |
| 19-JK-1044 | TEMP.OPNG. 310 LEVEL | VOID |
| 19-JK-1045 | EMERGENCY GENERATOR | 7/26/71 |
| 19-JK-1046 | REV.COL.SUPPORT | 9/16/71 |
| 19- K-1047.1 | PLAZA LEVEL SECTIONS | 10/ 7/71 |

| DWG. NO. | TITLE | DATE |
|---|---|---|
| 19- K-1047.2 | PLAZA LEVEL SECTIONS | 10/ 7/71 |
| 19-J-1048.1 | KEY PLAN FOR LOCATION OF LEGS | 10/ 1/71 |
| 19-J-1048.2 | KEY PLAN FOR LOCATION OF LEGS | 10/ 1/71 |
| 19-J-1048.3 | NOTES &DETAILS-CALDER STABILE | 10/ 1/71 |
| 19- K-1049 | SECTIONS ELEV. 332 STAIR 4 | 10/29/71 |
| 19- K-1050 | SECTIONS ELEV.332 STAIR 4 | 10/29/71 |
| 19-JK-1051.1 | EMRGY.GENRTR.PLTFORM EL246-6 J5&K11 | 2/ 2/71 |
| 19-JK-1051.2 | EMRGY.GENRTR.PLTFORM EL246-6 J5&K11 | 2/ 2/71 |
| 19- K-1052.1 | DETAIL FOR SHEARHEAD REPAIR | 3/10/72 |
| 19- K-1052.2 | BEAM REPAIR AT ELEV. 310 | 12/23/71 |
| 19- K-1053.1 | REINFORCING PLATES OF EXIST.COLS | 12/23/71 |
| 19- K-1053.2 | REINFORCING PLATES OF EXIST.COLS | 12/23/71 |
| 19- K-1053.3 | REINFORCING PLATES OF EXIST.COLS | 12/23/71 |
| 19- K-1054 | BASE PLATE REPAIR | 2/15/72 |
| 19- K-1055.1 | DETAIL FOR SHEARHEAD COL.K43/7&K43/8 | 6/30/72 |
| 19- K-1055.1 | COL.K35/5 | 5/ 4/73 |
| 19- K-1055.1 | COL.K31/5 | 8/31/72 |
| 19- K-1055.1 | COL.K35/4 | 5/ 4/73 |
| 19- K-1055.1 | COL.K35/8 | 8/31/72 |
| 19- K-1055.1 | COL.K35/9 | 8/31/72 |
| 19- K-1055.1 | COL.K37/9&K41/9 | 8/31/72 |
| 19- K-1055.1 | COL.K31/6 | 6/30/72 |
| 19- K-1055.1 | COL.K35/6&K35/7 | 5/ 4/73 |
| 19- K-1055.1 | COL.K35/2 | 5/ 4/73 |
| 19- K-1055.1 | COL.K41/8 | 6/30/72 |
| 19- K-1055.1 | COL.K35/10 | 8/31/72 |
| 19- K-1055.1 | COL.K37/2 | 5/ 4/73 |
| 19- K-1055X | | VOID |

19-A-988.3 5/9/79

**SKILLING, HELLE, CHRISTIANSEN, ROBERTSON** — **Structural & Civil Engineers**

| PROJECT | TITLE | DATE |
|---|---|---|
| THE WORLD TRADE CENTER | DRAWING BOOK 19 - REVISIONS AFTER FABRICATION | 5/18/73 |

REVISIONS

Printed 3-4-74

| DWG. NO. | TITLE | DATE |
|---|---|---|
| 19- K-1055.2 | DETAIL FOR SHEARHEAD REPAIR | 1/15/72 |
| 19- K-1055.2 | COL.K31/3 | 6/30/72 |
| 19- K-1055.2 | COL.K41/8 | 6/30/72 |
| 19- K-1055.2 | COL.K31/6 | 6/30/72 |
| 19- K-1055.2 | COL.K43/7&K43/8 | 6/30/72 |
| 19- K-1055.3 | COL.K43/7&K43/8 | 10/ 5/73 |
| 19- K-1056.1 | BEAM CONNECTIONS MEZZ.EL.320 | 10/10/72 |
| 19- K-1056.2 | BEAM CONNECTIONS MEZZ.EL.320 | 10/10/72 |
| ~~19- K-1056~~ | ~~BEAM CONNECTIONS MEZZ EL.320~~ | ~~1/15/72~~ |
| 19- K-1057 | HANGER DETAILS | 1/15/72 |
| 19- K-1058 | REPAIR DETAIL-EL.310 | 1/15/72 |
| 19- K-1059 | NEW COLUMN BOSOM & BEARING PLATES | 1/15/72 |
| 19- K-1060 | BEAM COVER PLATE-EL. 332 | 1/15/72 |
| 19-J -1061 | NEW OPENING-EL.279'3* | 3/ 3/72 |
| 19-K-1062.1 | EL332-ZONE K3-ELEVTRS K3,K4&K5 | 3/10/72 |
| 19-K-1062.2 | EL332-ZONE K3-ELEVTRS K3,K4&K5 | 3/10/72 |
| 19-K-1062.3 | EL332-ZONE K3-ELEVTRS K3,K4&K5 | 2/11/72 |
| 19- K-1063 | TEMP.PLANKED AREA-EL. 332-ZONE K1 | 2/16/72 |
| 19-J-1064.1 | PATH-NEW STAIR | 2/25/72 |
| 19-J-1064.2 | PATH-NEW STAIR | 2/25/72 |
| 19-J -1065 | PATH-NEW STAIR | 2/25/72 |
| 19-J -1066 | DET.OF WALL REPAIR IN FAN ROOM | 3/ 7/72 |
| 19- K-1067 | PARK.ELEVATORS ZONE K-3-EL.310 | 3/10/72 |
| 19-K-1068.1 | NEW SLAB OPNGS ZONE K1-ELEV.274 | 6/23/72 |
| 19-K-1068.2 | NEW SLAB OPNGS ZONE K1-ELEV.274 | 6/23/72 |
| 19- K-1069 | OPNGS IN BMS.STORM SEWER PIPES | 5/12/72 |
| 19- K-1070 | NEW OPNGS.EL.294 | 11/ 7/72 |
| 19- K-1073 | NEW OPNGS.WALLS ZONE K1,EL242 | 10/10/72 |
| 19- K-1074 | WALL OPENING-EL284 ZONE K6 | 1/ 8/73 |
| 19- K-1075.1 | RELOCATED PIT ZONE J6 290/294 | 4/12/73 |
| 19- K-1075.2 | RELOCATED PIT ZONE J6 290/294 | 4/12/73 |
| 19- K-1076.1 | EL.274,ZONE J4,RAMP J REINF. | 9/ 7/73 |
| 19- K-1076.2 | EL.274,ZONE J4,RAMP J REINF. | 5/ 8/73 |
| 19- K-1076.3 | EL.274,ZONE J4,RAMP J REINF. | 5/ 8/73 |
| 19- K-1076.4 | ZONE J2,RAMPJ,REINF | 9/ 7/73 |
| 19- K-1076.5 | EL.274,ZONE J4,RAMP J REINF. | 5/24/73 |
| 19- K-1076.6 | EL.274,ZONE J4,RAMP J REINF. | 5/ 8/73 |
| 19-J -1077 | NEW OPNG.IN SLOPING SLAB | 5/15/73 |
| 19- K-1078 | SHIMS AT STAIR PL2-SO TWR A-310/332 | 7/10/73 |
| 19- K-1079 | HOLES IN BEAM-EL.320 MEZZ.ZO.K1 | 8/16/73 |
| 19- K-1080 | REPAIR AT SLURRY WALL AT SEPB COL/BA | 1/10/74 |
| 19- K-1081 | REPAIR AT BMENDS-332 ZONE K-3 | 1/ 9/74 |
| 19- K-1082 | EL.332,ZONE K-5,REPR. E.FACE COL.K57 | 1/ 9/74 |
| 19- K-1083 | EL.332,ZONE K-5,REPR. W.FACE COL.K55 | 1/ 9/74 |
| 19- K-1084 | EL.294,ZONE K5,REPAIR AT BEAM | 1/ 9/74 |
| 19- K-1085 | REPAIR DETAIL FOR MIS LOCATED HANGER | 1/29/74 |
| 19- K-1086 | REPAIR AT TOP OF 14WF 202 DIAGONALS | 1/31/74 |
| 19- K-1087 | REPAIR AT SOUTH END OF 24WF100 | 1/31/74 |
| 19- K-1088 | REPAIR AT CRACKED PL N.END OF GIRD | 1/31/74 |
| 19-J -1089 | NEW CURB AND BUMPER RAMP J | 2/ 1/74 |
| 19- K-1090 | REPAIR BASE PL-COLH4/ 9,EL332 | 2/28/74 |
| 19- K-1091 | ZONE K3,EL332 TOP FLG PL BTWN GIRDS | 2/28/74 |
| 19-K-1092 | | 3/11/74 |
| 19-K-1093.1 | | 4/8/74 |
| 19-K-1093.2 | | 4/8/74 |
| 19-K-1094.1 | | 10/21/74 |
| 19-K-1094.2 | | 10/21/74 |
| 19-K-1094.3 | | 10/21/74 |
| 19-K-1095 | | 4/14/75 |
| 19-J-1096.1 | | 4/14/75 |
| 19-J-1096.2 | | 4/14/75 |
| 19-J-1096.3 | | 4/14/75 |
| 19-J-1097.1 | | 12/4/75 |
| 19-J-1097.2 | | 12/4/75 |
| 19-J-1097.3 | | 9/4/75 |
| 19-K-1098 | | 11/20/75 |

LICENSED PROFESSIONAL ENGINEER
LESLIE E. ROBERTSON
No. 34860
UNIVERSITY OF THE STATE OF NEW YORK

**SKILLING, HELLE, CHRISTIANSEN, ROBERTSON** — *Structural & Civil Engineers*

PROJECT: THE WORLD TRADE CENTER

TITLE: DRAWING BOOK 19 - REVISIONS AFTER FABRICATION

DATE: 7/27/73

REVISIONS

Printed 8-4-74

| DWG. NO. | TITLE | DATE |
|---|---|---|
| 19- B-1100 | TEL/CO REV. TWR.B FLOORS 11&12 | 7/ 9/71 |
| 19- B-1101 | TEL/CO REV. TWR.B EL.264-294 | 7/ 9/71 |
| 19- B-1102 | TEL/CO REV. TWR.B FLOOR 7 | 1/12/72 |
| 19- B-1103 | FLOOR 105B BUFFER BEAM | 10/25/71 |
| 19-A-1104.1 | TOWER A FLOOR 44-PLAN | 12/10/71 |
| 19-A-1104.2 | TOWER A FLOOR 44-SECTION | 12/10/71 |
| 19-A-1104.3 | TOWER A FLOOR 44-SECTION | 12/10/71 |
| 19-A-1105.1 | HEAT EXCHANGER & PUMP BASE-TWRA-43 | 2/18/72 |
| 19-A-1105.2 | HEAT EXCHANGER & PUMP BASE-TWRA-43 | 2/18/7 |
| 19-B-1106.1 | TELCO REVISIONS-TWR B FL.9&10 | 1/12/72 |
| 19-B-1106.2 | TELCO REVISIONS-TWR B FL.11&12 | 1/12/72 |
| 19-B-1107 | ENLARGE BEAM OPENING TWR B-FL.108 | 12/13/71 |
| 19-B-1108.1 | TOWER B-PH-SHAFT 50 EXTENSION | 1/10/72 |
| 19-B-1108.2 | TOWER B-PH-SHAFT 50 EXTENSION | 1/10/72 |
| 19-B-1108.3 | TOWER B-PH-SHAFT 50 EXTENSION | 1/10/72 |
| 19-B-1108.4 | TOWER B-PH-SHAFT 50 EXTENSION | 1/10/72 |
| 19-B-1108.5 | TOWER B-PH-SHAFT 50 EXTENSION | 1/10/72 |
| 19-B-1108.6 | TOWER B-PH-SHAFT 50 EXTENSION | 1/10/72 |
| 19-B-1108.7 | TOWER B-PH-SHAFT 50 EXTENSION | 1/10/72 |
| 19-B-1108.8 | TOWER B-PH-SHAFT 50 EXTENSION | 1/10/72 |
| 19-B-1108.9 | TOWER B-PH-SHAFT 50 EXTENSION | 1/10/72 |
| 19-B-1108.10 | TOWER B-PH-SHAFT 50 EXTENSION | 1/10/72 |
| 19-B-1108.11 | TOWER B-PH-SHAFT 50 EXTENSION | 1/10/72 |
| 19-B-1108.12 | TOWER B-PH-SHAFT 50 EXTENSION | 1/10/72 |
| 19-B-1108.13 | TOWER B-PH-SHAFT 50 EXTENSION | 1/10/72 |
| 19-B-1108.14 | TOWER B-PH-SHAFT 50 EXTENSION | 1/10/72 |
| 19-B-1108.15 | TOWER B-PH-SHAFT 50 EXTENSION | 1/10/72 |
| 19-B-1108.16 | TEMP.RELOCATION OF ELEV.50 MACH. | 2/28/72 |
| 19-B-1108.17 | TEMP.RELOCATION OF ELEV.50 MACH. | 2/28/72 |
| 19-B-1108.18 | TEMP.RELOCATION OF ELEV.50 MACH. | 2/28/72 |
| 19-B-1108.19 | TEMP.RELOCATION OF ELEV.50 MACH. | 2/28/72 |
| 19-B-1108.20 | TEMP.RELOCATION OF ELEV.50 MACH. | 2/28/72 |
| 19-B-1108.21 | TEMP.RELOCATION OF ELEV.50 MACH. | 2/28/72 |
| 19-B-1108.22 | TEMP.RELOCATION OF ELEV.50 MACH. | 2/28/72 |
| 19-B-1109.1 | STRAP ANCHORS-KEYPLAN EL.264 TWR.B | 1/25/72 |
| 19-B-1109.2 | STRAP ANCHORS-KEYPLAN EL.274 TWR.B | 1/25/72 |
| 19-B-1109.3 | STRAP ANCHOR DETS. EL 264&274 TWR.B | 1/25/72 |
| 19-B-1110 | TEMP.DET. BASE PL.TWR B-COL.607&907 | 1/25/72 |
| 19-B-1111 | TEMP.BRACING TWR.B-EL 277&260'9* | 1/25/72 |
| 19-B-1112.1 | TOWER B-FL.106 SECTION | 3/ 3/72 |
| 19-B-1112.2 | TOWER B-FL.106 SECTION | 3/ 3/72 |
| 19- B-1113 | WINDOW WASHER DETAIL | 4/19/72 |
| 19- B-1114 | TOWER B FLOOR 10 NEW OPENING | 4/20/72 |
| 19-B-1115.1 | TOWER B EL.284 NEW SLAB OPENING | 6/12/72 |
| 19-B-1115.2 | TOWER B EL.294 NEW SLAB OPENING | 6/12/72 |
| 19-AK-1116 | NEW OPENING PATH KE | 12/21/72 |
| 19-AK-1117.1 | NEW OPENING PATH KE | 12/21/72 |
| 19-AK-1117.2 | NEW OPENING PATH KE | 12/21/72 |
| 19-AK-1117.3 | NEW OPENING PATH KE | 12/21/72 |
| 19-A -1119 | NEW SLAB TOWER A FL. 48 | 5/15/72 |
| 19-A -1120 | ENLARGED UPNG TV TRANSMISSION | 5/15/72 |
| 19- B-1121 | PH ROOF UPPER PERIMETER BEAM | 7/17/72 |
| 19-A 1122.1 | VOID | 7/27/73 |
| 19-A 1122.2 | VOID | 7/27/73 |
| 19-A -1123 | VOID | 7/27/73 |
| 19-A-1124.1 | VOID | 7/27/73 |
| 19-A-1124.2 | VOID | 7/27/73 |
| 19-A-1125.1 | VOID | 7/27/73 |
| 19-A-1125.2 | VOID | 7/27/73 |
| 19-A -1127 | VOID | 7/27/73 |
| 19-A -1122 | DUMBWAITER PIT SUPPY. FLOOR 106 | 11/ 9/73 |
| 19-AB1128.1 | TWRB&B LOBB.CEIL.WASH SUPPT.CORE | 1/ 8/74 |
| 19-AB1128.2 | TWRB&B LOBB.CEIL.WASH SUPPT.PERIMET. | 1/ 8/74 |
| 19-AB1128.3 | TWRB&B LOBB.CEIL.WASH SUPPT.CORNER | 1/ 8/74 |
| 19-AB1130.1 | SLAB REPAIR-FLOOR 107 TOWER A | 7/31/73 |
| 19-AB1130.2 | SLAB REPAIR-FLOOR 107 TOWER B | 7/31/73 |
| 19-AB-1131 | TWRS. A&B-FL.45 SLAB OVER OPNGS | 8/ 3/73 |
| 19-AB1132.1 | INSTALL.OMITTED SLAB TWR B/EL253 | 8/ 7/73 |
| 19-AB1132.2 | INSTALL.OMITTED SLAB TWR B/EL253 | 8/ 7/73 |
| 19-AB-1133 | CORNER SLOPNG PARAPET PH-TWR A&B | 8/17/73 |
| 19-AB-1135 | BEAM DET/CONN.AT ESCALATOR FL.110 | 8/16/73 |
| 19- B-1136 | SHAFT WALL ANCHORAGE DETAIL | 9/24/73 |
| 19-A -1137 | DUMBWAITER MACHINE SUPPORT-FL.108 | 1/ 3/74 |
| 19- B-1138 | NEW BEAM OPNG.TOWER B FL.107 | 1/15/74 |
| 19- B-1140 | REPAIR TWR B OBSERVAT DECK ESCALATOR | 2/27/74 |
| 19-A-1141 | | 2/28/74 |
| 19-A-1142 | | 11/14/74 |
| 19-A-1143.1 | | 12/16/74 |
| 19-A-1143.2 | | 12/16/74 |
| 19-A-1144 | | 12/16/74 |
| 19-A-1145 | | 2/25/75 |
| 19-A-1146 | | 2/20/75 |
| 19-A-1147.1 | | 3/20/75 |
| 19-A-1147.2 | | 3/20/75 |
| 19-A-1147.3 | | 2/24/75 |
| 19-A-1147.4 | | 2/24/75 |
| 19-A-1147.5 | | 2/24/75 |
| 19-A-1147.6 | | 2/24/75 |
| 19-A-1147.7 | | 2/24/75 |
| 19-A-1147.8 | | 3/20/75 |
| 19-A-1147.9 | | 2/24/75 |
| 19-A-1148 | | 4/15/75 |
| 19-A-1149 | | 4/15/75 |
| 19-A-1150.1 | | 8/8/75 |
| 19-A-1150.2 | | 5/23/75 |
| 19-A-1150.3 | | 5/23/75 |
| 19-A-1150.4 | | 5/23/75 |
| 19-A-1150.5 | | 5/23/75 |
| 19-A-1150.6 | | 8/8/75 |
| 19-A-1151 | | 9/4/75 |
| 19-A-1152 | | 3/30/77 |

LICENSED PROFESSIONAL ENGINEER
LESLIE E. ROBERTSON
No. 34360
STATE OF NEW YORK

19-AB-0.4

**SKILLING, HELLE, CHRISTIANSEN, ROBERTSON** — **Structural & Civil Engineers**

| PROJECT | TITLE | DATE |
|---|---|---|
| THE WORLD TRADE CENTER | DRAWING BOOK 19 - REVISIONS AFTER FABRICATION | 5/18/73 |

REVISIONS

| DWG. NO. | TITLE | DATE |
|---|---|---|
| 19-E -2001 | NE BLDG.FIELD REPAIR | 3/15/71 |
| 19-E -2002 | NE BLDG.FIELD REPAIR | 3/22/71 |
| 19-E -2003 | NE BLDG.FIELD REPAIR | 4/10/72 |
| 19-E -2004 | NE BLDG TEMP. OPENING | 7/ 9/71 |
| 19-E -2005.1 | TEMP. SUPPORT FOR PIPING | 11/10/71 |
| 19-E -2005.1 | ALT. TEMP. SUPPORT FOR PIPING | VOID |
| 19-E -2005.2 | TEMP. SUPPORT FOR PIPING | 11/10/71 |
| 19-E -2005.2 | ALT. TEMP. SUPPORT FOR PIPING | VOID |
| 19-E -2005.3 | TEMP. SUPPORT FOR PIPING | 12/20/71 |
| 19-E -2006 | REPAIR FL.10 SOUTH | 12/29/71 |
| 19-E -2007.1 | PIPING THRU BEAM | 11/ 1/71 |
| 19-E -2007.2 | PIPING THRU BEAM | 11/ 1/71 |
| 19-E -2008 | PIPING THRU BEAM | 11/ 1/71 |
| 19-E -2009 | PIPING THRU BEAM | 11/ 1/71 |
| 19-E -2010.1 | BEAM OPENINGS ELEV. 332 | 11/ 1/71 |
| 19-E -2010.2 | BEAM OPENINGS ELEV. 332 | 11/ 1/71 |
| 19-E -2011 | CONC. OPENINGS ELEV. 332 | 11/ 1/71 |
| 19-E -2012.1 | PLAZA SECT.AT BLDG. EDGE | 1/21/72 |
| 19-E -2012.2 | PLAZA SECT.AT BLDG. EDGE | 1/21/72 |
| 19-E -2012.3 | PLAZA SECT.AT BLDG. EDGE | 1/21/72 |
| 19-E -2012.4 | PLAZA SECT.AT BLDG. EDGE | 1/21/72 |
| 19-E -2013.1 | BASE PAD/TURNTABLE & CHARGE CHMBR. | 2/29/72 |
| 19-E -2013.2 | BASE PAD/TURNTABLE & CHARGE CHMBR. | 2/29/72 |
| 19-E -2014 | NEW OPENING-EL332 NE BUILDING | 2/18/72 |
| 19-E -2015 | NEW OPENINGS EL.332 | 4/10/72 |
| 19-E -2016 | NEW OPENINGS EL.332 | 3/24/72 |
| 19-E -2017 | NE BLDG.EL.332 CANT. SLAB SUPPORT | 5/22/72 |
| 19-E -2018 | CONCRETE OPENING | 9/18/72 |
| 19-E-2019 | | 7/6/73 |
| 19-B-2100.1 | MODIF.TO P.H. ROOF FRAMING PLAN | 9/27/71 |
| 19-B-2100.2 | MODIF.TO P.H. ROOF FRAMING PLAN | 9/27/71 |
| 19-B-2100.3 | MODIF.TO P.H. ROOF FRAMING PLAN | 9/27/71 |
| 19-B-2100.4 | MODIF.TO P.H. ROOF FRAMING PLAN | 9/27/71 |
| 19-K-2200 | | 10/4/71 |
| 19-X3-1 | | 6/29/73 |
| -2.1 | | |
| -2.2 | | |
| -2.3 | | |
| -2.4 | | |
| -3.1 | | |
| -3.2 | | |
| -3.3 | | |
| -3.4 | | |
| -3.5 | | |
| 19-X3-3.6 | | |
| 19-X4-1 | | |
| -2.1 | | |
| -2.2 | | |
| -2.3 | | |
| -2.4 | | |
| -3.1 | | |
| -3.2 | | |
| 19-X4-3.3 | | 6/29/73 |

REVISIONS

3-12-69

## GENERAL NOTES

1. The details given in Book 19 define revisions to be made to previously fabricated steel members, or to members under fabrication.

2. The location of such revisions and the detail number are shown in Structural Steel Plans, using the following symbol:

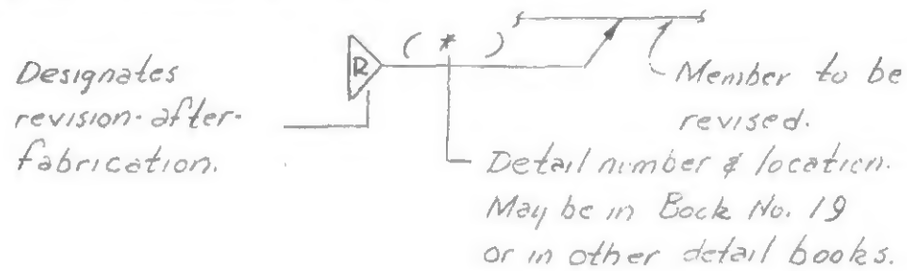


Details of revisions-after-fabrication may be given in Book 19, or in other detail books. When details are in Book 19, the symbol shown in plans reads:

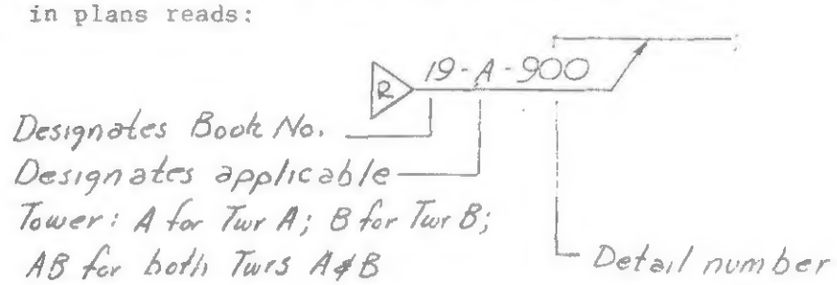


3. Member numbers used in the details of Book 19 are the member numbers shown in Erection Plans and other shop drawings using the system:

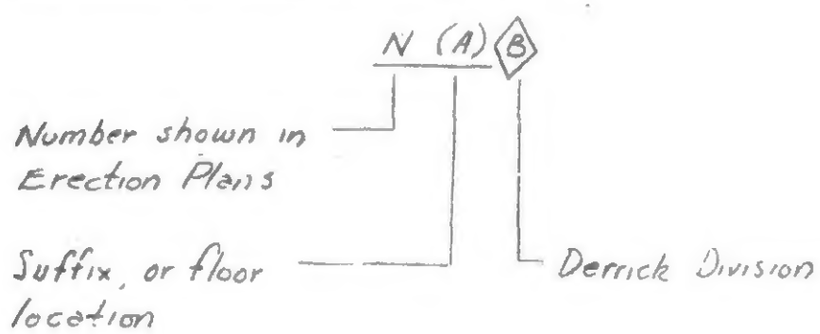


4. Revisions after fabrication shall conform to current AISC and AWS specifications for building construction, and to project drawings and specifications for the fabricated members being revised.

5. Standard AISC connections shall be used where shown in the drawings, or where member reactions are given in kips, or where connection details are not otherwise shown. Bolted connections shall have a minimum of two 3/4" Ø A325 bolts, unless otherwise shown.

6. All bolts shall be ASTM A325, friction-type, unless otherwise shown in the drawings.

7. All manual welding electrodes shall be E70XX low hydrogen, unless otherwise shown in the drawings.

8. All steel parts shall be ASTM A36, unless otherwise shown in the drawings.

9. The requirements and general notes given in the following drawings apply to the details of Book 19 when pertinent:

   1-A2-44
   5-AB1-0
   6-AB1-1

10. Permanent members which are gouged, cut or otherwise damaged during revision work shall be restored to their original condition. Gouges and cuts shall be repaired by filling with weld metail and grinding smooth.

11. The Contractor may propose alternate connection details using bolts in lieu of welds shown in drawings, by submitting a drawing of the alternate detail for approval. No deviation from the details originally shown in the drawings is permitted without the approval of alternate drawings.

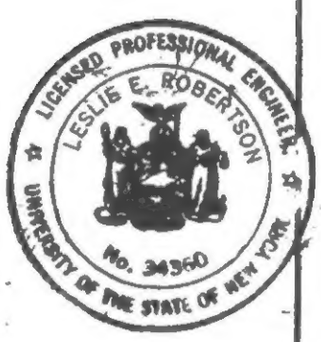

SKILLING, HELLE, CHRISTIANSEN, ROBERTSON — Structural & Civil Engineers

PROJECT: THE WORLD TRADE CENTER | TITLE: REVISION AFTER FABRICATION DETAIL 900 | DATE: 8-15-68

REVISIONS

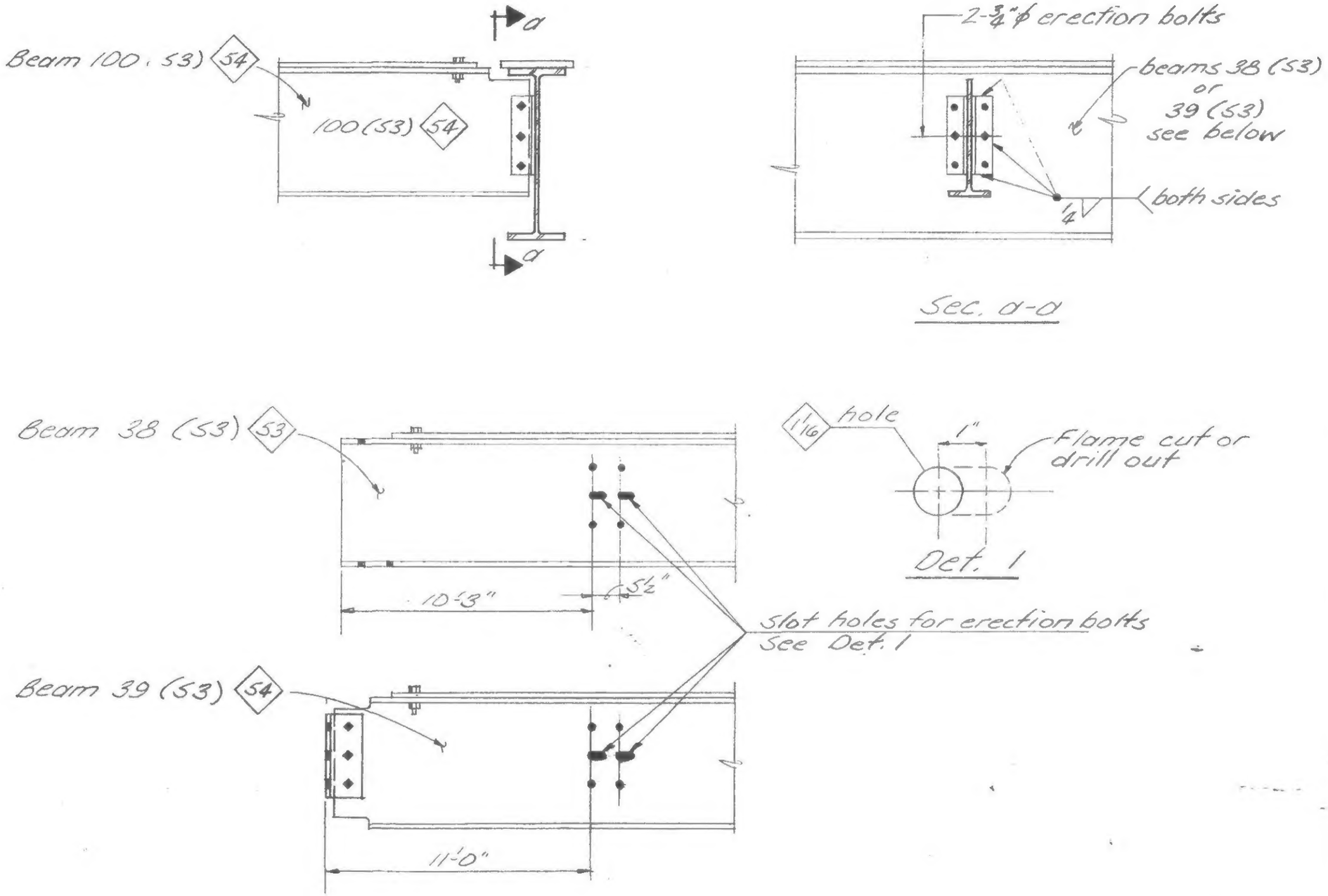


LICENSED PROFESSIONAL ENGINEER — LESLIE E. ROBERTSON — No. 34360 — UNIVERSITY OF THE STATE OF NEW YORK

DESIGNED

DRAWN

REVIEWED

19-A-900

SKILLING, HELLE, CHRISTIANSEN, ROBERTSON — Structural & Civil Engineers

PROJECT: THE WORLD TRADE CENTER | TITLE: REVISION AFTER FABRICATION DETAIL 901 | DATE: 8-15-68

REVISIONS

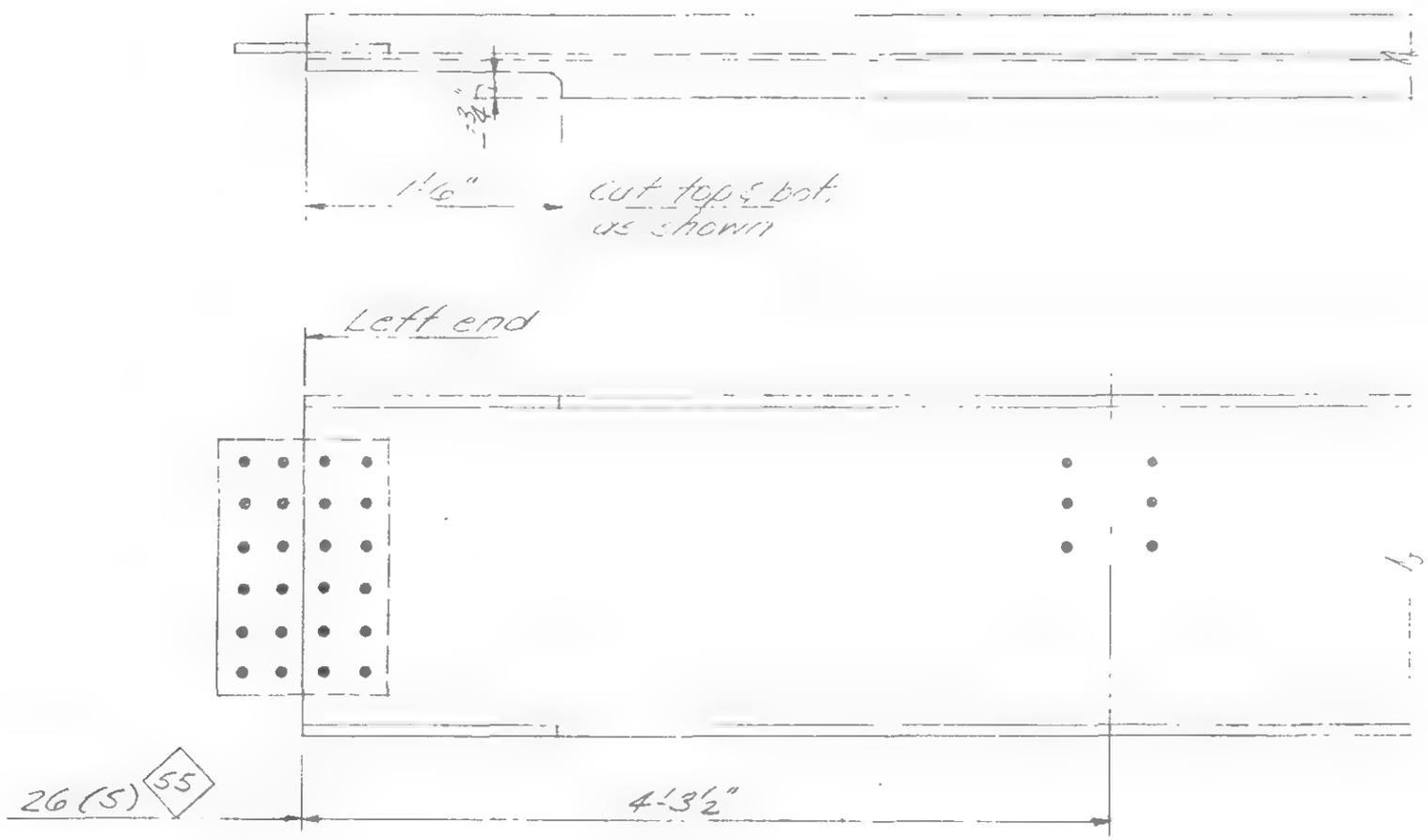


LICENSED PROFESSIONAL ENGINEER
LESLIE E. ROBERTSON
No. 34360
UNIVERSITY OF THE STATE OF NEW YORK

DESIGNED

DRAWN

REVIEWED

19-A-901

SKILLING, HELLE, CHRISTIANSEN, ROBERTSON — Structural & Civil Engineers

PROJECT: THE WORLD TRADE CENTER | TITLE: REVISION AFTER FABRICATION DETAIL 903 | DATE: 8-15-68

REVISIONS

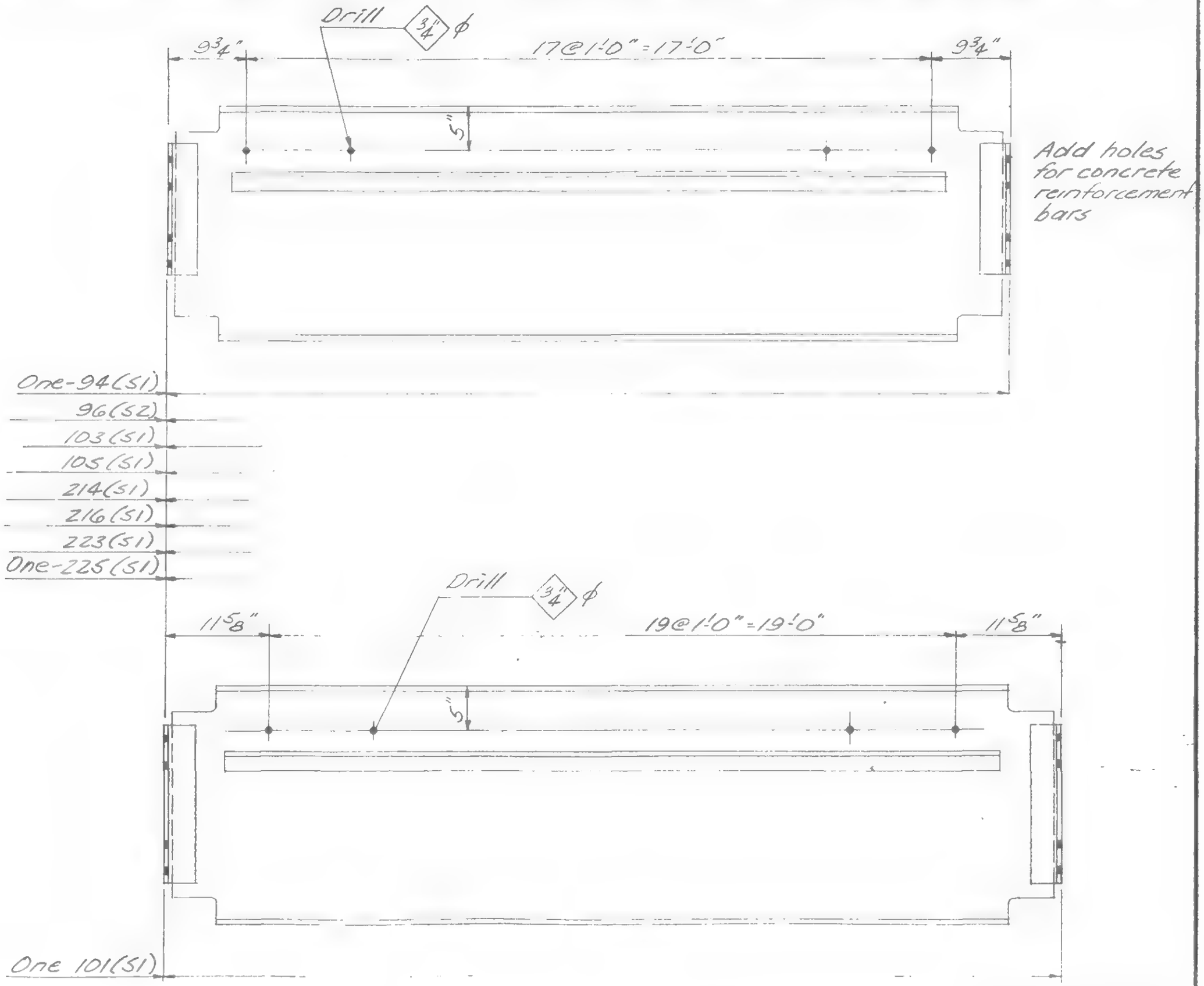


DESIGNED

DRAWN

REVIEWED

19-A-903

SKILLING, HELLE, CHRISTIANSEN, ROBERTSON — Structural & Civil Engineers

PROJECT: THE WORLD TRADE CENTER | TITLE: REVISION AFTER FABRICATION DETAIL 904 | DATE: 8-15-68

REVISIONS

deleted from set before 1st issue - change shop drawing not by WIL approval WB

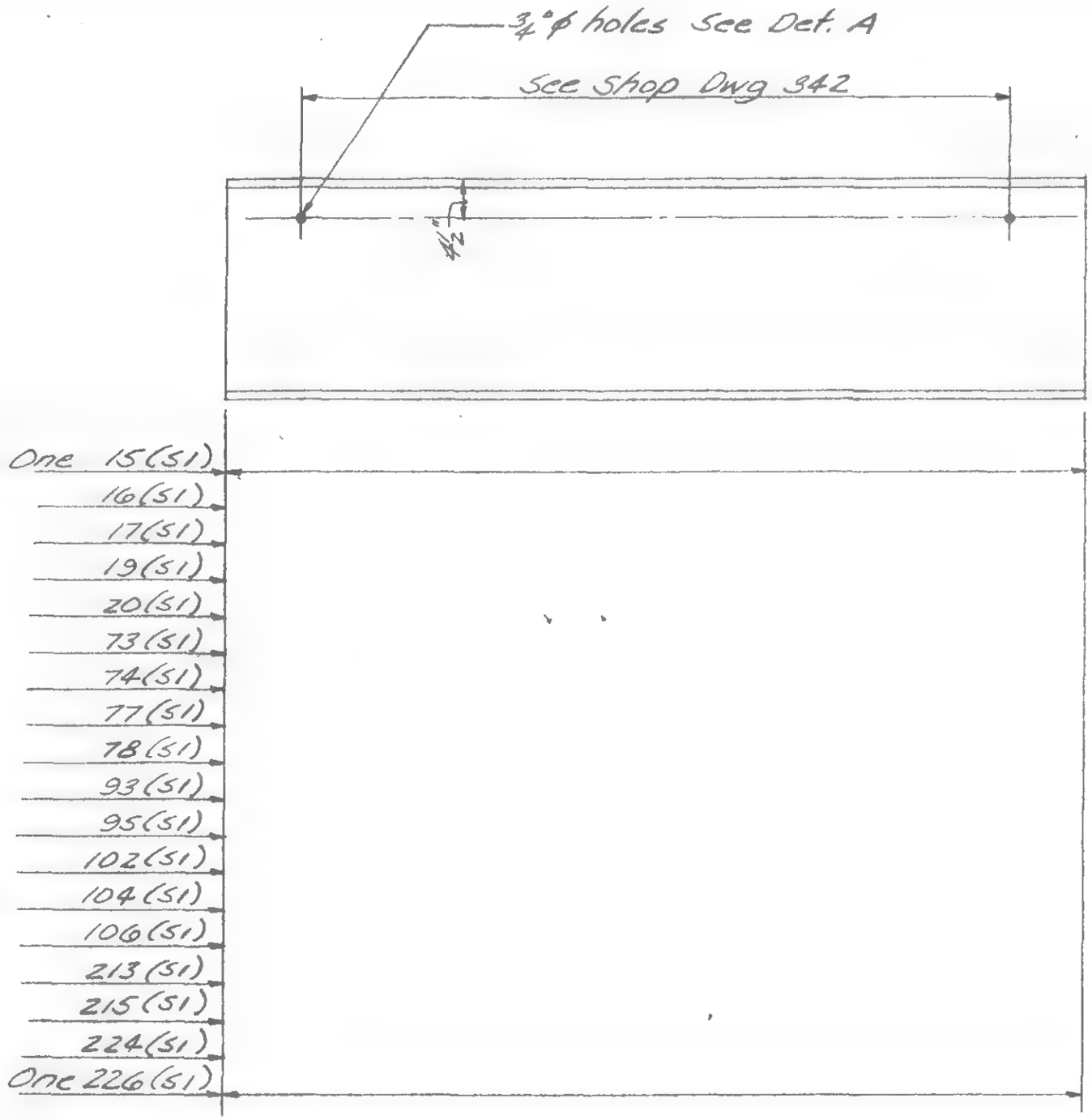


Section Y-Y on SA-6 schedules 3/4"ϕ holes at 5" from top flange

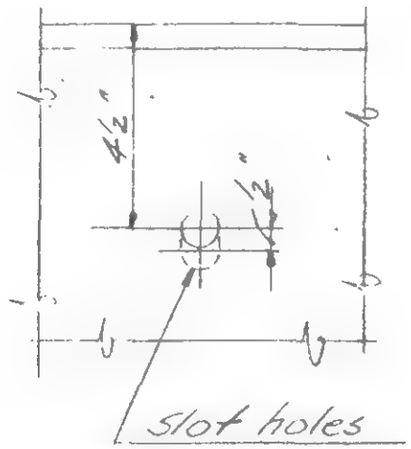


Det. A (typ.)

LICENSED PROFESSIONAL ENGINEER — LESLIE E. ROBERTSON — No. 34360 — UNIVERSITY OF THE STATE OF NEW YORK

Deleted (see letter)

SIGNED

DRAWN

REVIEWED

19-A-904

SKILLING, HELLE, CHRISTIANSEN, ROBERTSON — Structural & Civil Engineers

PROJECT: THE WORLD TRADE CENTER | TITLE: REVISION AFTER FABRICATION DETAIL 905 | DATE: 8-15-68

REVISIONS

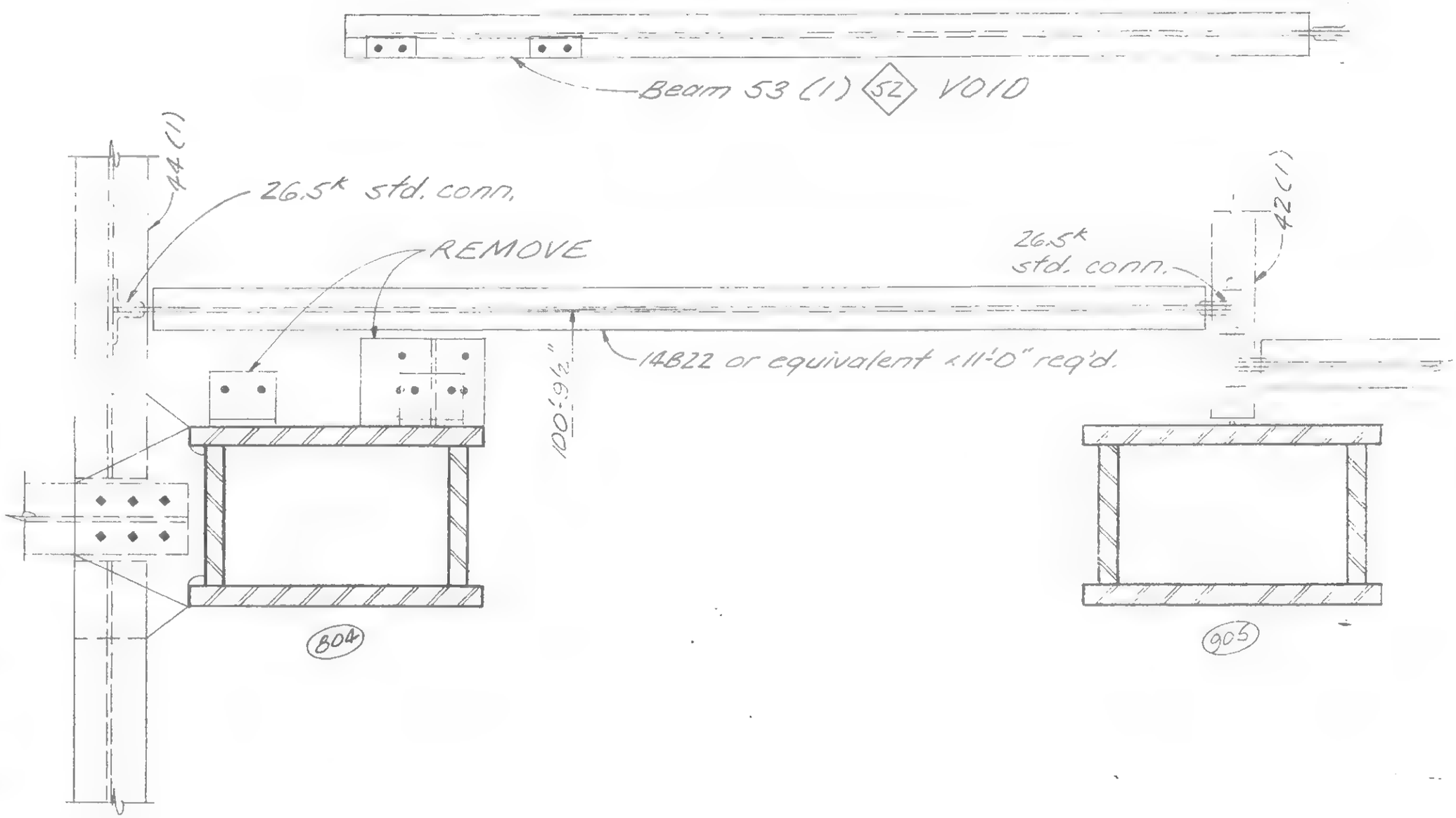


LICENSED PROFESSIONAL ENGINEER
LESLIE E. ROBERTSON
No. 34360
UNIVERSITY OF THE STATE OF NEW YORK

DESIGNED

DRAWN

REVIEWED

19-A-905

SKILLING, HELLE, CHRISTIANSEN, ROBERTSON — Structural & Civil Engineers

PROJECT: THE WORLD TRADE CENTER | TITLE: REVISION AFTER FABRICATION DETAIL 906 | DATE: 8-18-68

REVISIONS

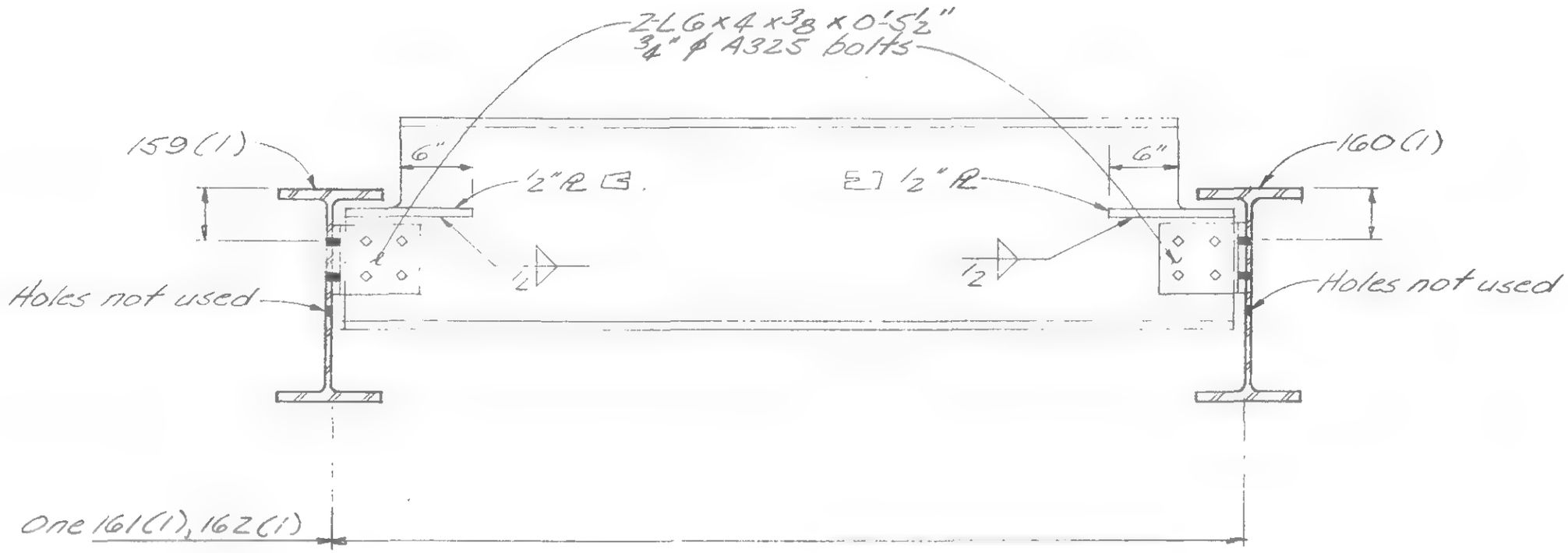


Remove present angle details, block, drill, and add new details as shown.

LICENSED PROFESSIONAL ENGINEER
LESLIE E. ROBERTSON
No. 34360
UNIVERSITY OF THE STATE OF NEW YORK

DESIGNED

DRAWN

REVIEWED

19-A-906

SKILLING, HELLE, CHRISTIANSEN, ROBERTSON — Structural & Civil Engineers

PROJECT: THE WORLD TRADE CENTER | TITLE: REVISION AFTER FABRICATION DETAIL 907 | DATE: 8-15 68

REVISIONS

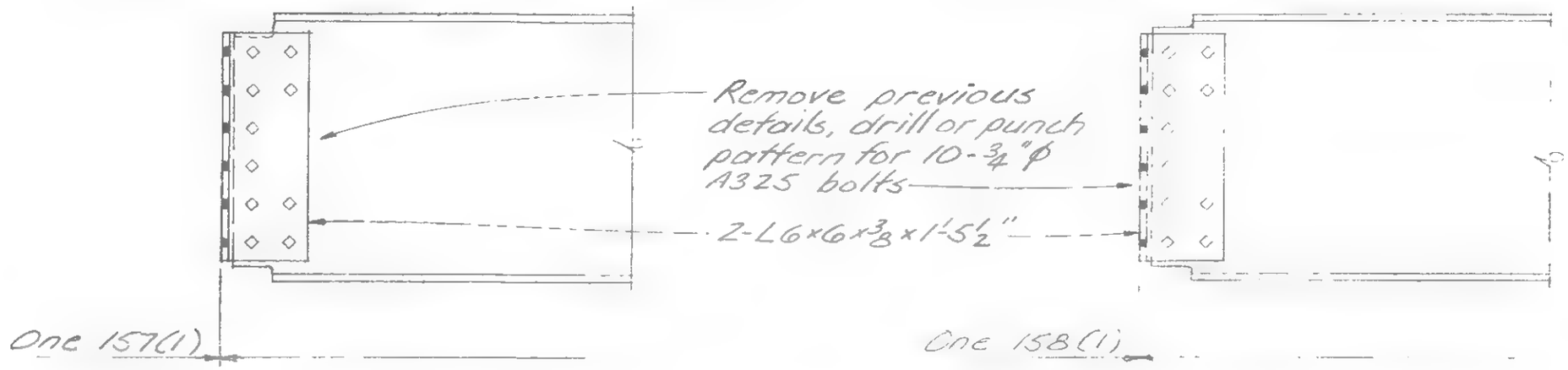


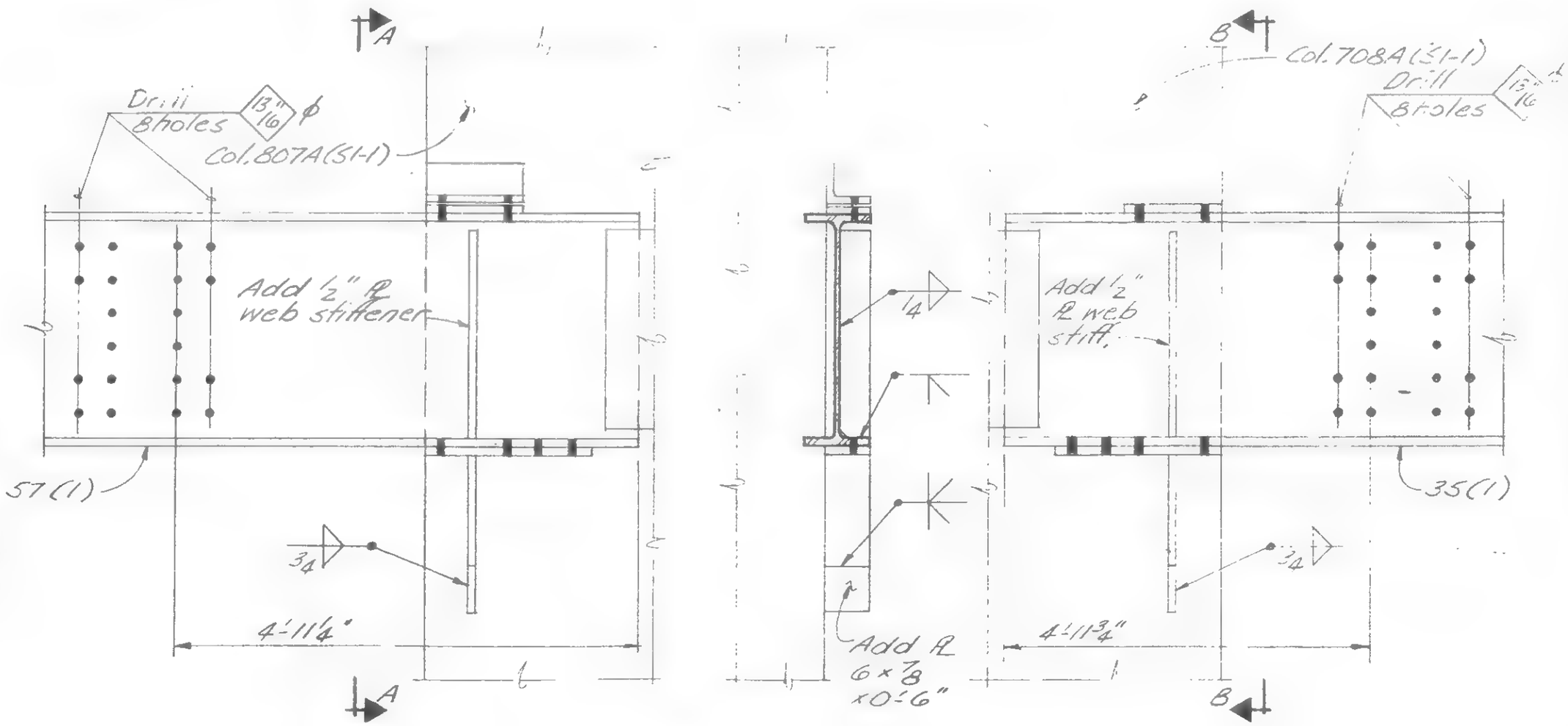


Sec. A-A
Sec B-B opp. hand

LICENSED PROFESSIONAL ENGINEER — LESLIE E. ROBERTSON — No. 34360 — UNIVERSITY OF THE STATE OF NEW YORK

DESIGNED

DRAWN

REVIEWED

19-A-907

SKILLING, HELLE, CHRISTIANSEN, ROBERTSON — Structural & Civil Engineers

PROJECT: THE WORLD TRADE CENTER | TITLE: REVISION AFTER FABRICATION DETAIL 908 | DATE: 8-15-68

REVISIONS

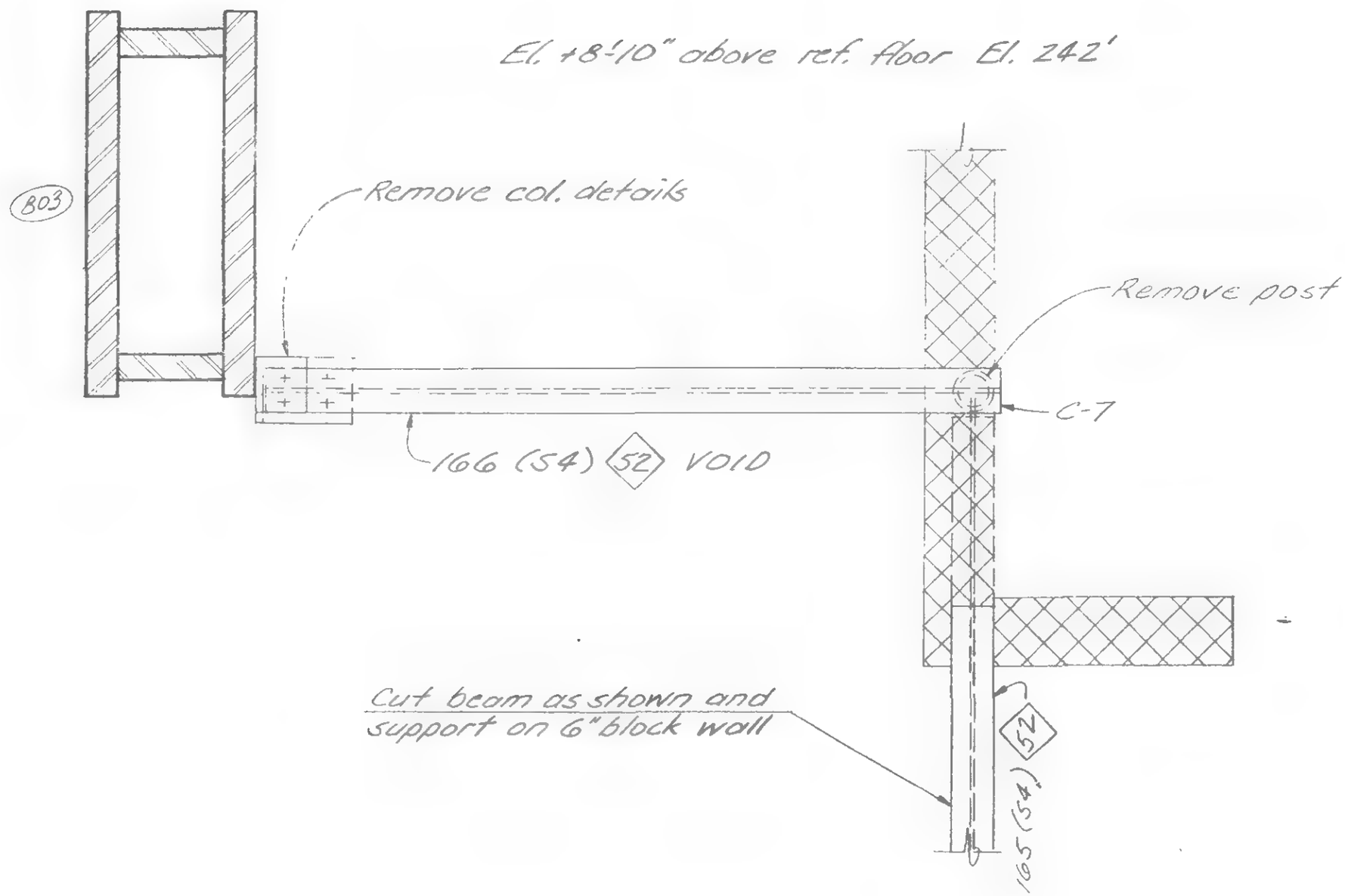


LICENSED PROFESSIONAL ENGINEER
LESLIE E. ROBERTSON
No. 34360
UNIVERSITY OF THE STATE OF NEW YORK

DESIGNED

DRAWN

REVIEWED

19-A-908

SKILLING, HELLE, CHRISTIANSEN, ROBERTSON — Structural & Civil Engineers

PROJECT: THE WORLD TRADE CENTER | TITLE: REVISION AFTER FABRICATION DETAIL 909 | DATE: 8-15-68

REVISIONS

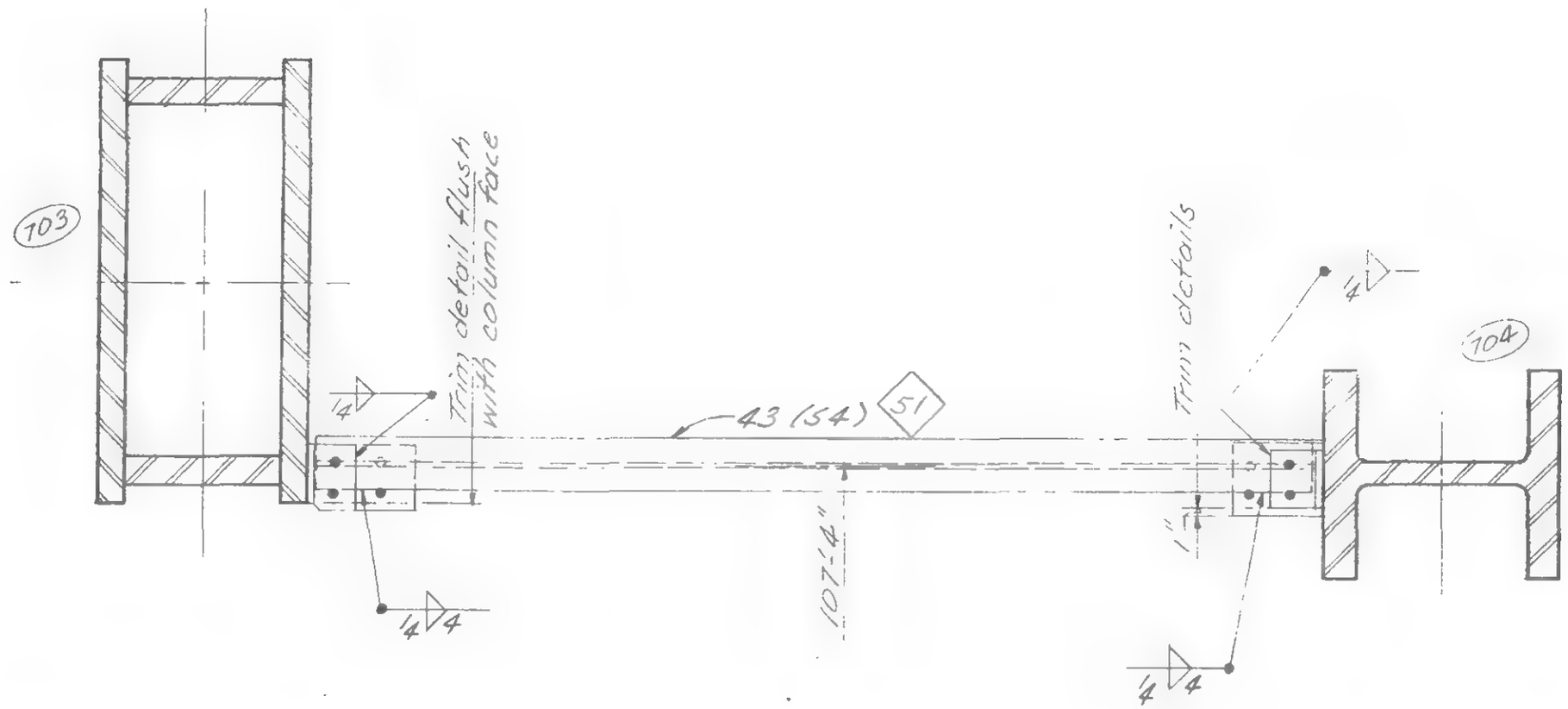


At +13'-2" above El. 242

DESIGNED

DRAWN

19-A-909

SKILLING, HELLE, CHRISTIANSEN, ROBERTSON — Structural & Civil Engineers

PROJECT: THE WORLD TRADE CENTER | TITLE: REVISION AFTER FABRICATION DETAIL 910 | DATE: 8-15-68

REVISIONS

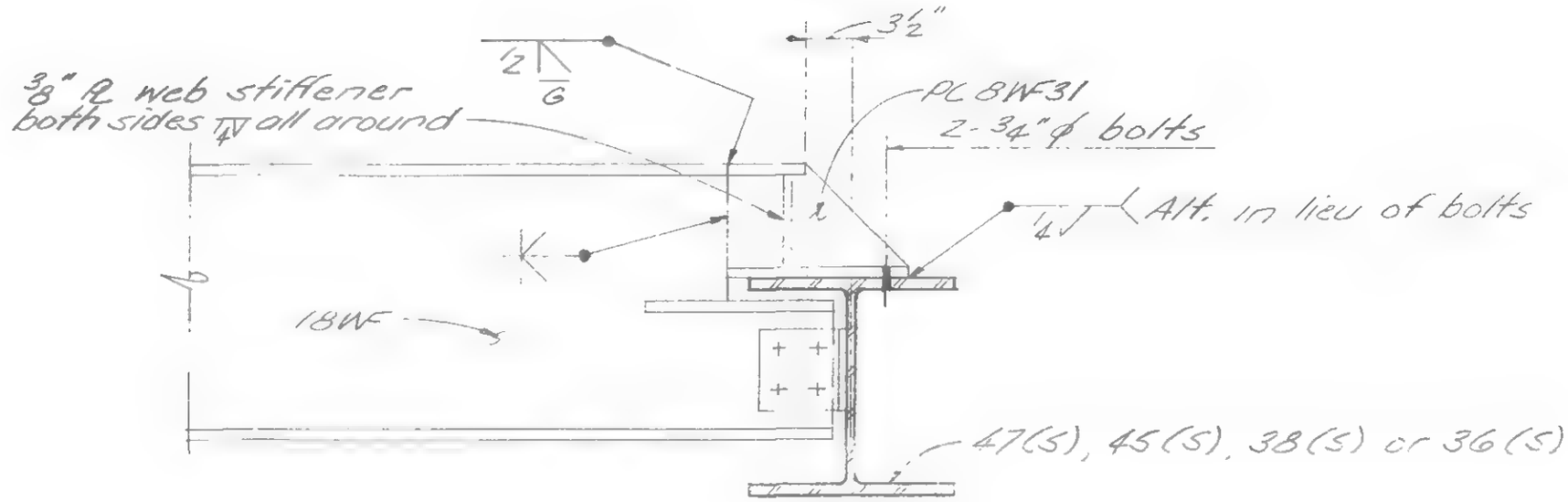


| Leftend on Framing Plan | |
|---|---|
| | 2-102 (S) |
| | One-105 (S) |
| | 106 (S) |
| | 112 (S) |
| | 113 (S) |
| | 115 (S) |
| | One-116 (S) |

LICENSED PROFESSIONAL ENGINEER — LESLIE E. ROBERTSON — No. 34360 — UNIVERSITY OF THE STATE OF NEW YORK

DESIGNED

DRAWN

REVIEWED

19-A-910

SKILLING, HELLE, CHRISTIANSEN, ROBERTSON — Structural & Civil Engineers

PROJECT: THE WORLD TRADE CENTER | TITLE: REVISION AFTER FABRICATION DETAIL 911 | DATE: 8-15-68

REVISIONS

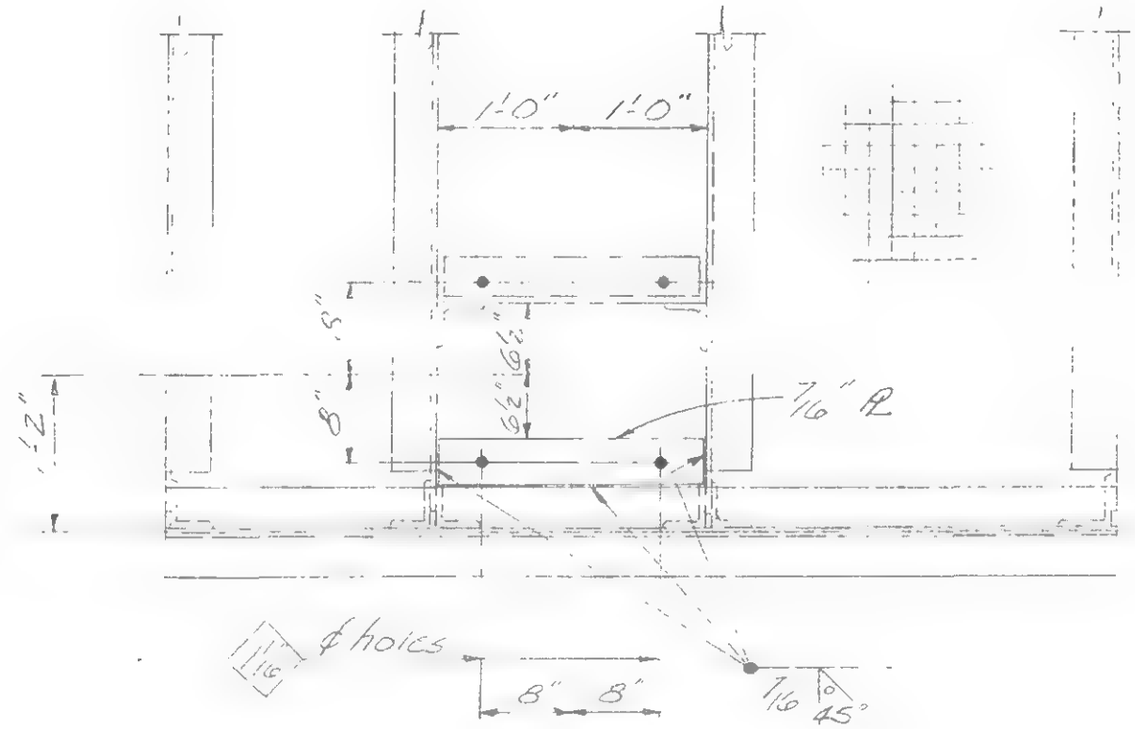


ONE- PUMP PLATFORM 279(5)
Revise both ends as shown

LICENSED PROFESSIONAL ENGINEER
LESLIE E. ROBERTSON
No. 34360
UNIVERSITY OF THE STATE OF NEW YORK

DESIGNED

DRAWN

REVIEWED

19-2-911

SKILLING, HELLE, CHRISTIANSEN, ROBERTSON — Structural & Civil Engineers

| PROJECT | TITLE | DATE |
|---|---|---|
| THE WORLD TRADE CENTER | REVISION AFTER FABRICATION - DETAIL 912 | 10-7-68 |

REVISIONS

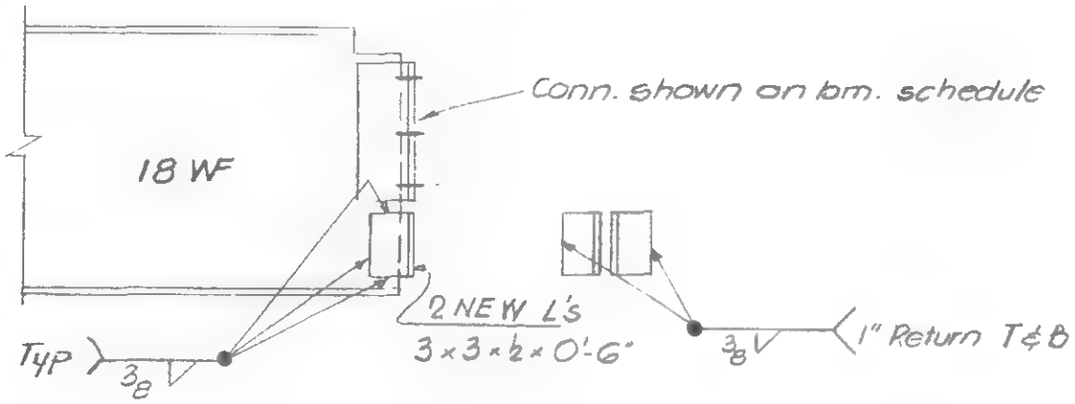


BM. 3988 @ 264'-0" Level

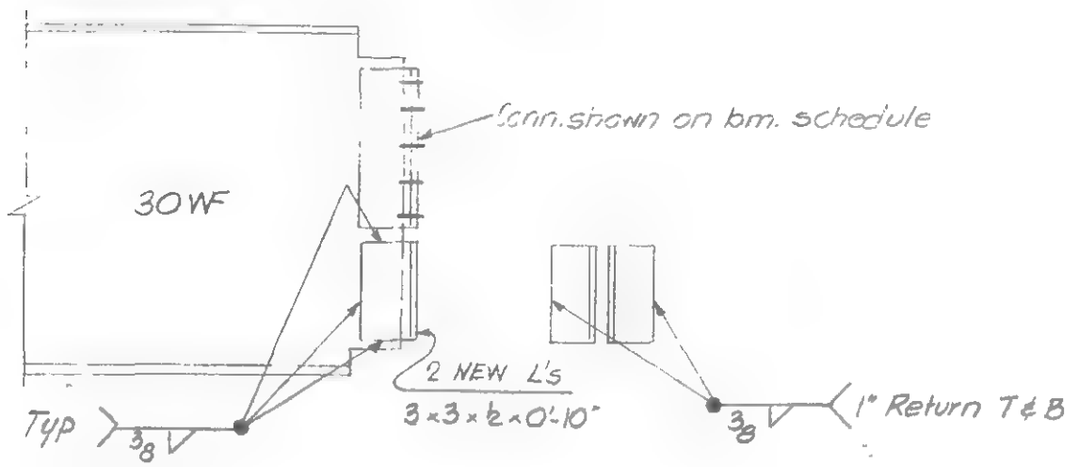


BM. 3915 & 3977 @ 264'-0" level

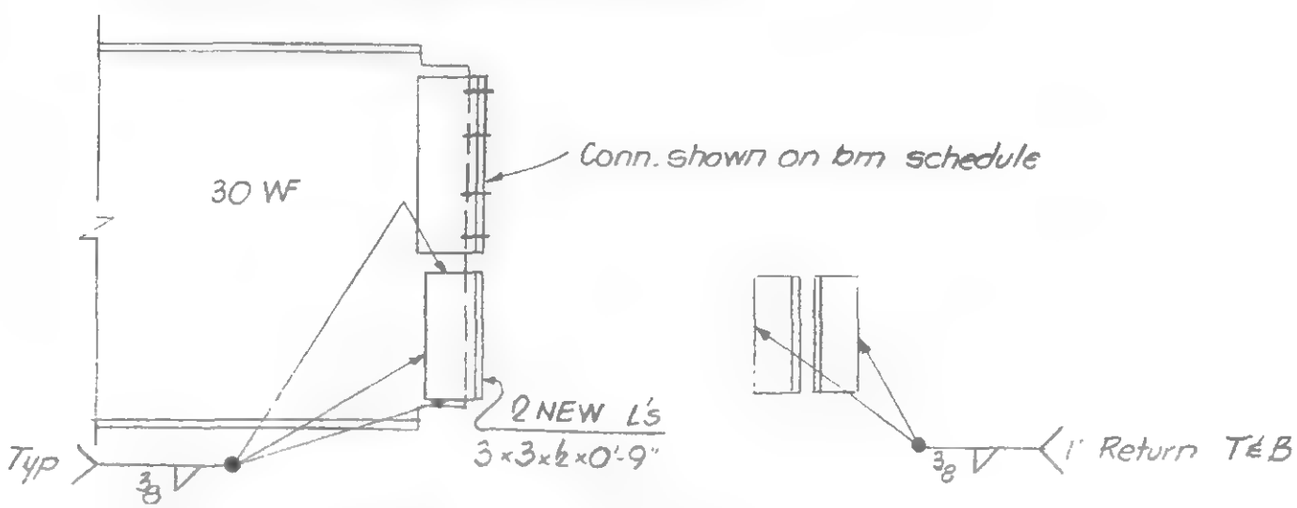


BM. 597 & 3916 @ 284'-0" level

LICENSED PROFESSIONAL ENGINEER
LESLIE E. ROBERTSON
No. 34380
STATE OF NEW YORK

SIGNED

DRAWN

REVIEWED

19-AB-912

SKILLING, HELLE, CHRISTIANSEN, ROBERTSON — Structural & Civil Engineers

PROJECT: THE WORLD TRADE CENTER | TITLE: REVISION AFTER FABRICATION - DETAIL 913 | DATE: 10/9/68

REVISIONS

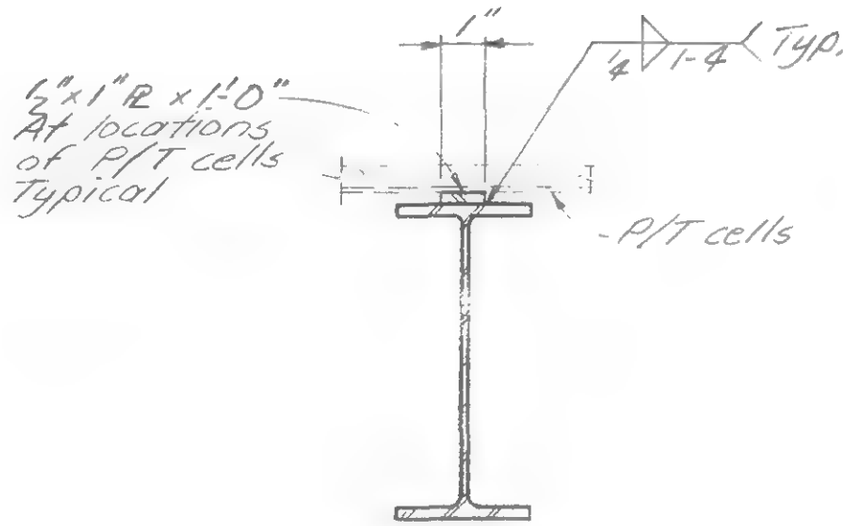


AT WF BEAMS

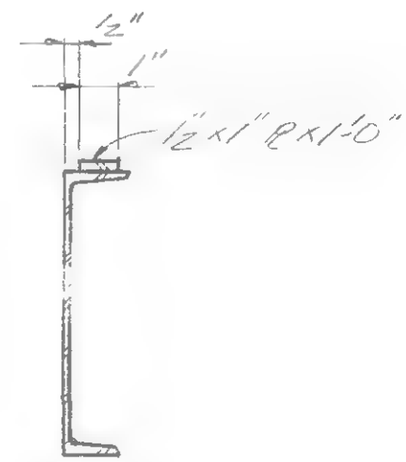


AT C BEAMS

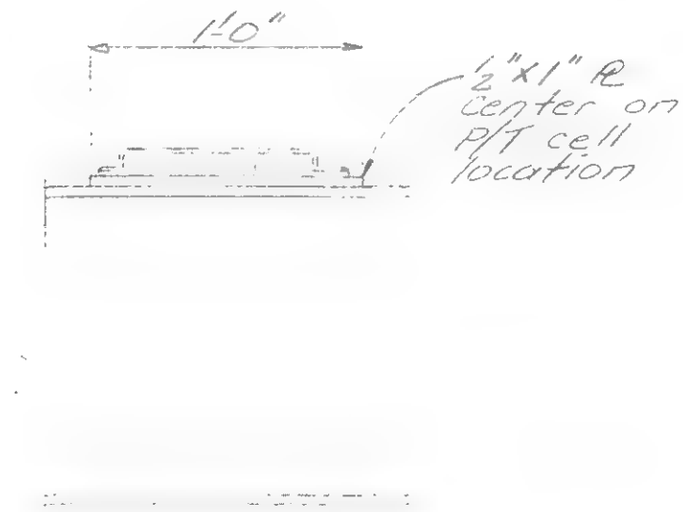


TYPICAL ELEVATION

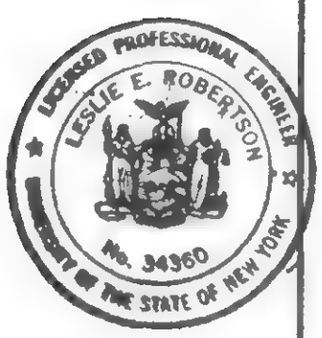


DESIGNED

DRAWN

REVIEWED

D-P-913

SKILLING, HELLE, CHRISTIANSEN, ROBERTSON — Structural & Civil Engineers

PROJECT: THE WORLD TRADE CENTER | TITLE: REVISION AFTER FABRICATION DETAIL 914 | DATE: 11-20-68

REVISIONS

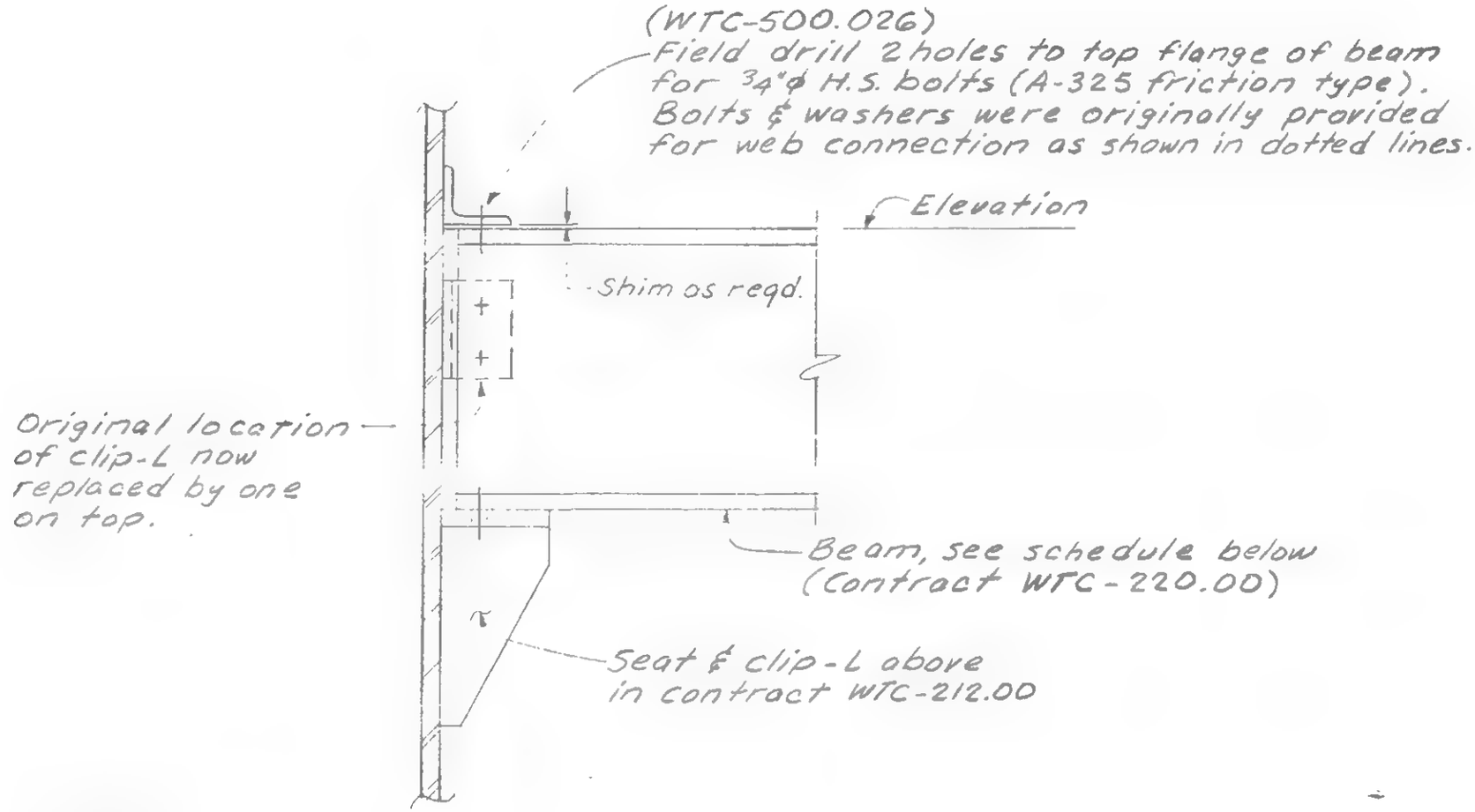


| DETAIL NO. | BEAM | |
|---|---|---|
| | SIZE | ELEVATION |
| A-401 | 18WF55 | 307'-5" |
| A-402 | 24B55 | 307'-11" |
| A-403 | 18WF55 | 307'-11" |
| A-404 | 18WF55 | 307'-11" |
| A-405 | 18WF55 | 308'-1" |
| A-406 | 18WF55 | 308'-1" |
| A-407 | 18WF55 | 308'-3" |

DESIGNED

DRAWN

REVIEWED

19-A-914

SKILLING - HELLE - CHRISTIANSEN - ROBERTSON  Structural & Civil Engineers

PROJECT: THE WORLD TRADE CENTER | TITLE: REVISION AFTER FABRICATION - DETAIL 915 | DATE: 11-29-68

REVISIONS

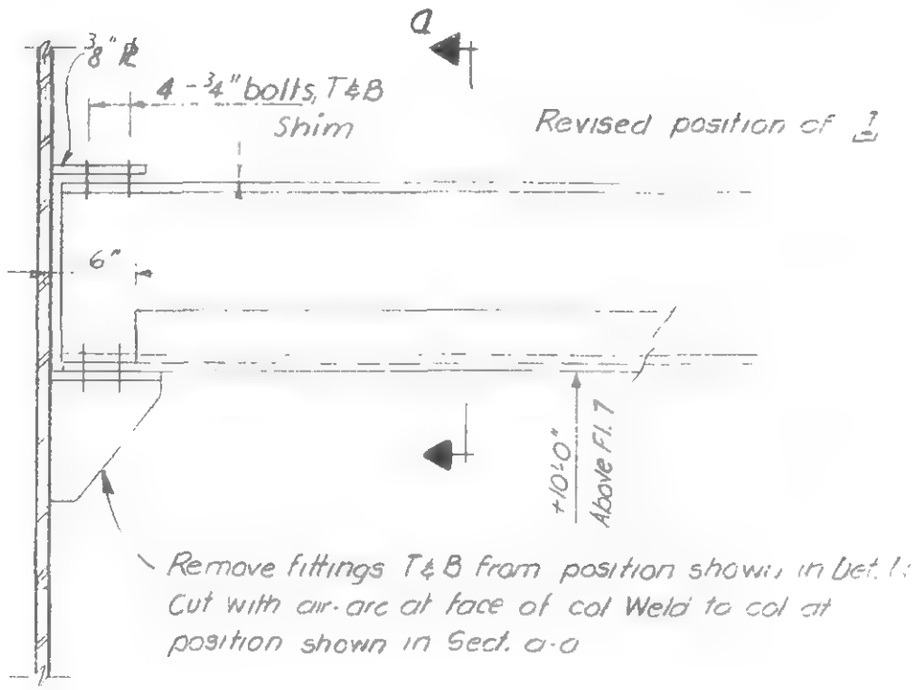


Detail M

Connection after Revision

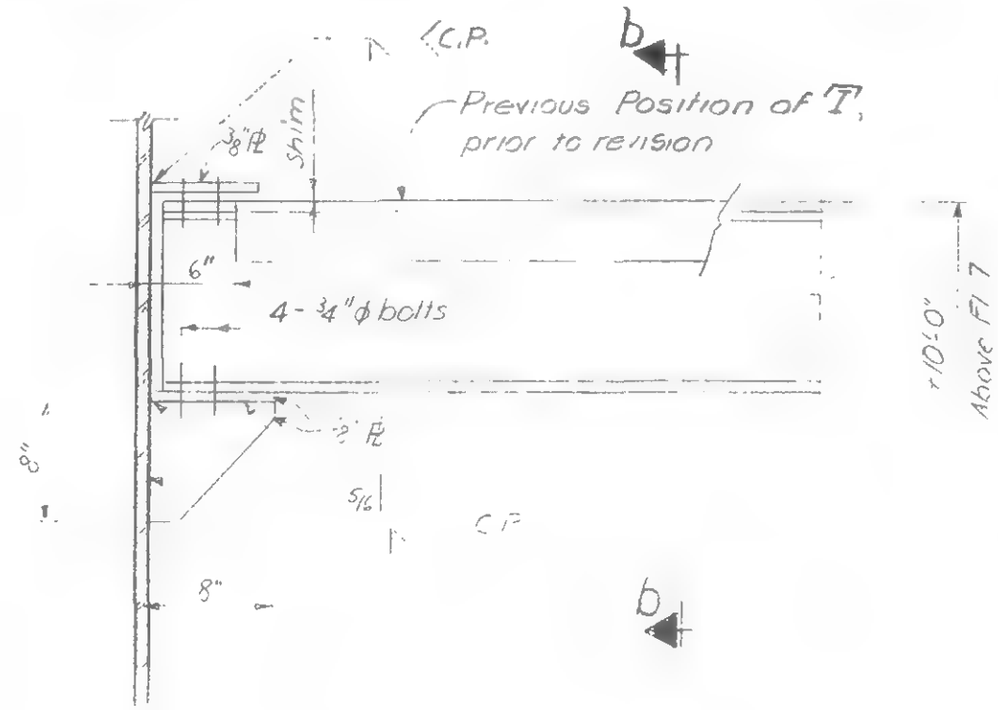


Detail N

Connection as Fabricated on column Before Revision

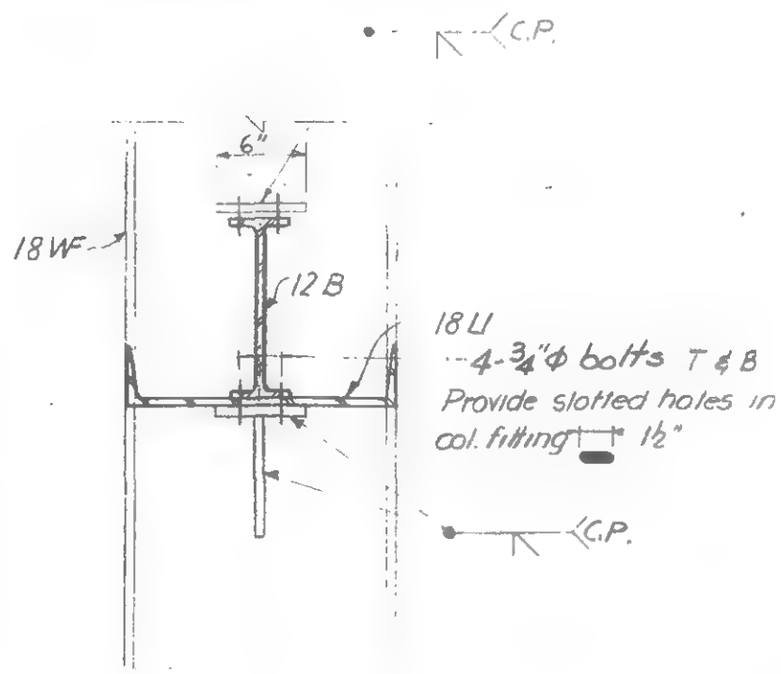


Section a-a

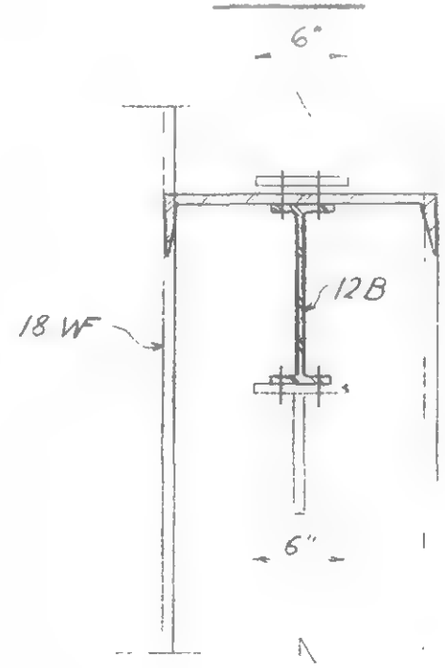


Section b-b

Ref. dwg: 16-AB4-23

19 - AB - 915

SKILLING, HELLE, CHRISTIANSEN, ROBERTSON — Structural & Civil Engineers

PROJECT: THE WORLD TRADE CENTER | TITLE: REVISION AFTER FABRICATION - DETAIL 916 | DATE: 12-30-68

REVISIONS

1-3-69

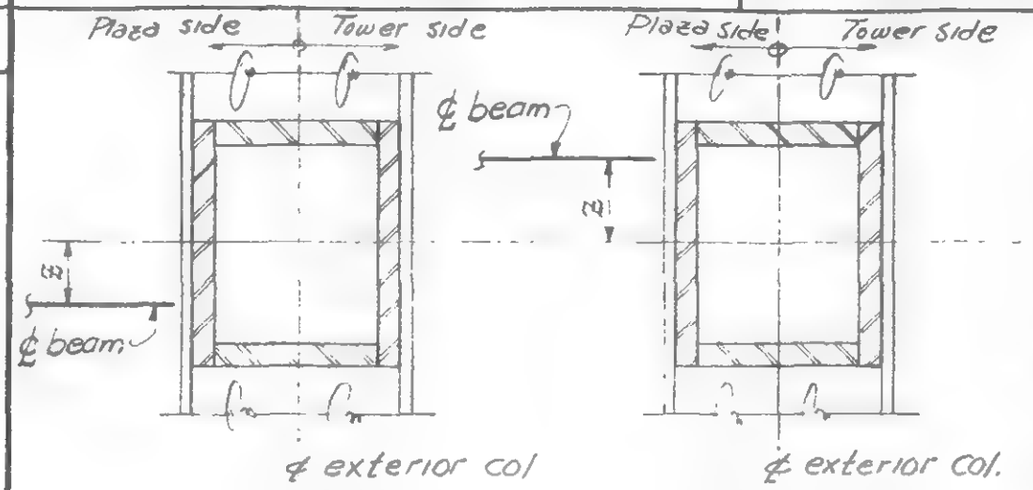


Type ① Type ②

PLAN: PLAZA BEAM SEAT LOCATIONS

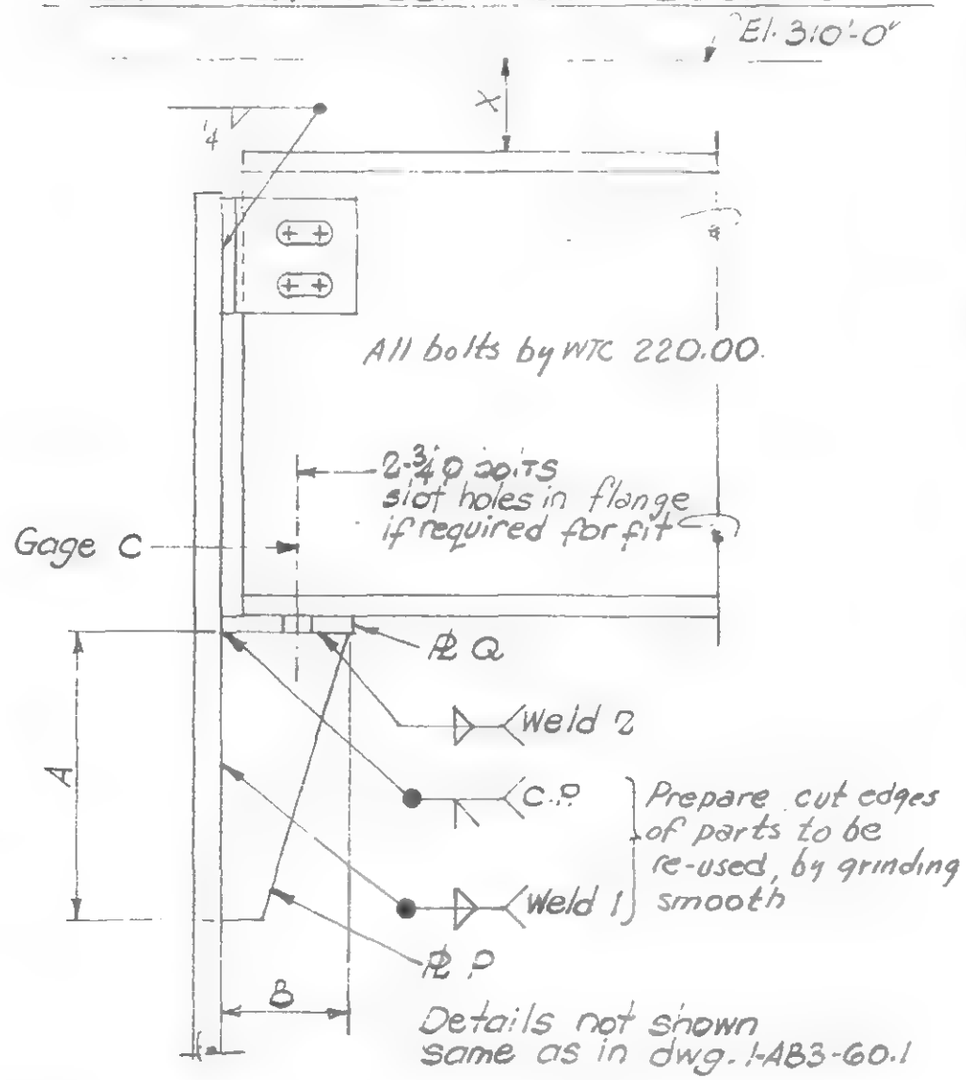


TYPICAL PLAZA BEAM SEAT DETAILS

## COLUMN LOCATION

| | | 224B | 301B | 312B | 315B | 351B | 354B |
|---|---|---|---|---|---|---|---|
| Action Required | | Note 1 | Note 2 | Note 2 | Note 2 | Note 1 | Note 3 |
| Previous Detail | | P.N | P10B | P.N | — | None | None |
| New Seat Location | Type | ① | ② | ① | ② | on ℄ | on ℄ |
| | Z | 0'-6" | 0'-6" | 2'-6" | 1'-3" | 0" | 0' |
| Seat Design Data | | — | Note 4 | Note 4 | Note 4 | Note 5 | Note 4 |
| Plates | P | 3/4" | | | | 1/2 | |
| | Q | 3/4" | | | | 1/2 | |
| Dimensions | A | 1'-2" | | | | 1'-0" | |
| | B | 6" | | | | 6 | |
| | X | 11" | | | | 11" | |
| | C | 5 1/2" | | | | 3 1/2" | |
| Welds | 1 | 3/8" | | | | 5/16 | |
| | 2 | 3/8" | | | | 5/16 | |
| Beam Size | | 16WF58 | | | | 16WF36 | |
| Ref. Dwg: 1-AB3-60.1, -60.5 | | | | | | | |

NOTES:

1. Provide new beam seat
2. Remove beam seat & web clip from loc. previously shown and install removed parts at new location shown.
3. Remove seat & clip previously scheduled for column 224B and install removed parts at col 354B
4. Seat details are the same as previously scheduled for this column. See reference dwg.
5. Seat detail is the same as previously scheduled under P.N.
6. Dress spandrel face after cutting off bm seats & web clips, by filling gouges with weld metal &/or grinding burrs smooth.
7. New bm seats & clips may be installed in lieu of re-using exist'g parts, Contr's option.

LICENSED PROFESSIONAL ENGINEER — LESLIE E. ROBERTSON — No. 34360 — UNIVERSITY OF THE STATE OF NEW YORK

DESIGNED

DRAWN S.T.M.

REVIEWED

19-B-916

SKILLING - HELLE - CHRISTIANSEN - ROBERTSON  Structural & Civil Engineers

PROJECT THE WORLD TRADE CENTER | TITLE REVISION AFTER FABRICATION - DETAIL 918 | DATE 1-15-69

REVISIONS

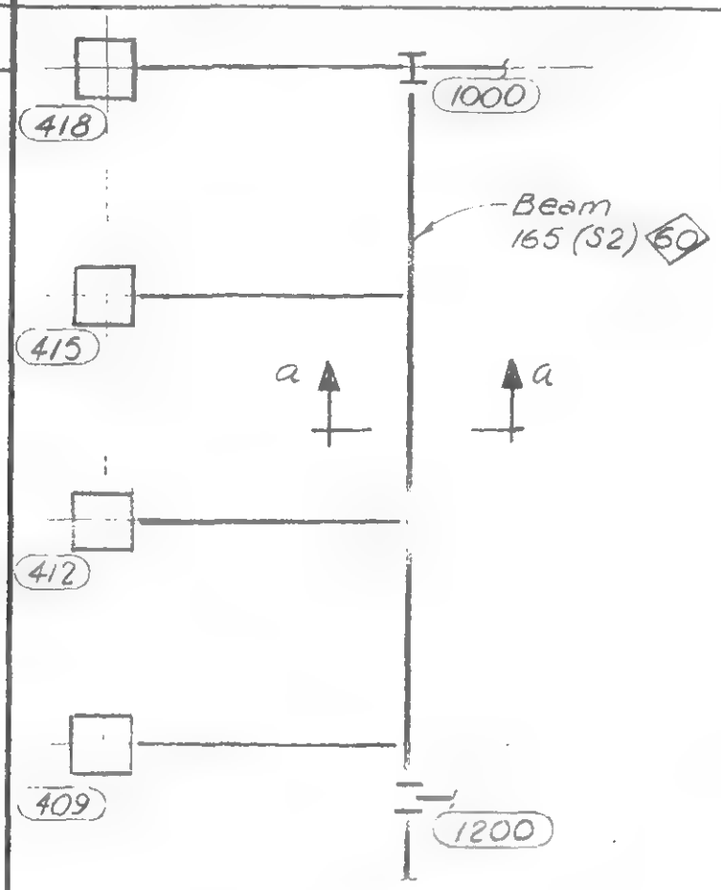


PLAN - ELEV. 274 - TOWER A

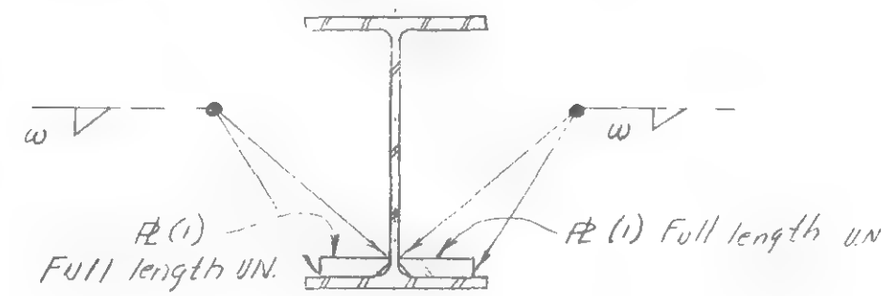


TYPICAL SECTION

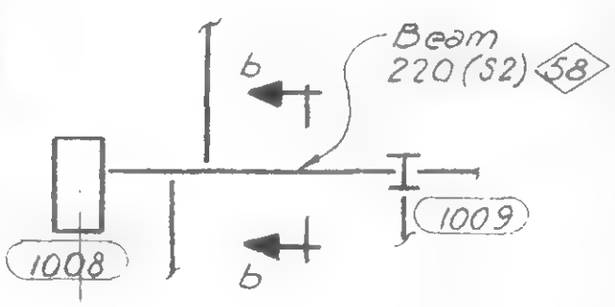


PLAN - ELEV. 274 TOWER A

| Added Beam Studs $\frac{3}{4}$"Ø x 3" U.N. | | |
|---|---|---|
| Beam | Nº Studs per Row | Spac'g of Rows |
| 124(S2) 62 | 2 | 6" o.c. |
| 149(S2) 70 | 2 | 6" o.c. |
| 221(S2) 58 | 2 | 6" o.c. |
| 222(S2) 70 | 2 | 6" o.c. |
| 223(S2) 70 | 2 | 6" o.c. |
| 224(S2) 70 | 2 | 6" o.c. |
| 225(S2) 70 | 2 | 6" o.c. |
| 226(S2) 70 | 2 | 6" o.c. |
| | | |
| | | |
| | | |
| | | |

Studs shall be installed for the full length of beam, unless otherwise noted.

| Detail | Beam Section | PL (1) | Weld Size "w" | Notes |
|---|---|---|---|---|
| Sec aa | 12 WF 79 | 5" x $\frac{3}{4}$" (Fy=50) | $\frac{1}{4}$" | Stagger welds 4" welds @ 8" o.c. |
| Sec bb | 12 WF 27 | $2\frac{3}{4}$" x $\frac{1}{2}$" (Fy=36) | $\frac{1}{4}$" | Stagger welds 4" welds @ 8" o.c. |
| | | | | |
| | | | | |

LICENSED PROFESSIONAL ENGINEER LESLIE E. ROBERTSON No. 34360 STATE OF NEW YORK

19 - A - 918

SKILLING, HELLE, CHRISTIANSEN, ROBERTSON — Structural & Civil Engineers

PROJECT: THE WORLD TRADE CENTER

TITLE: REVISIONS TO STRUCTURAL STEEL DETAIL 919

DATE: 1-17-69

REVISIONS

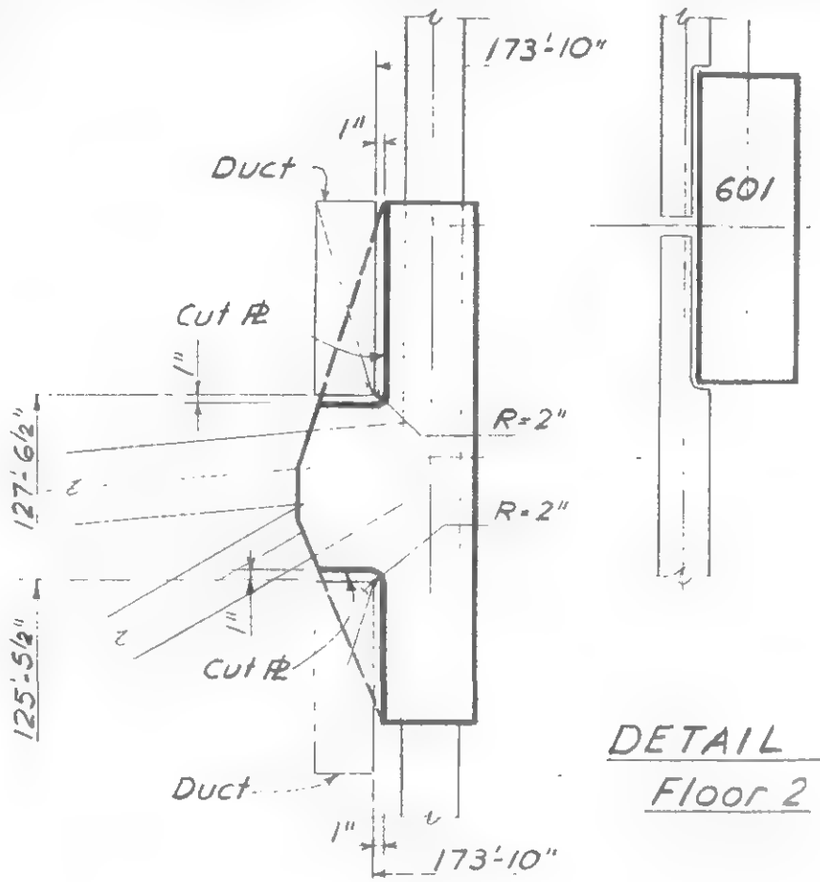


DETAIL 61
Floor 2

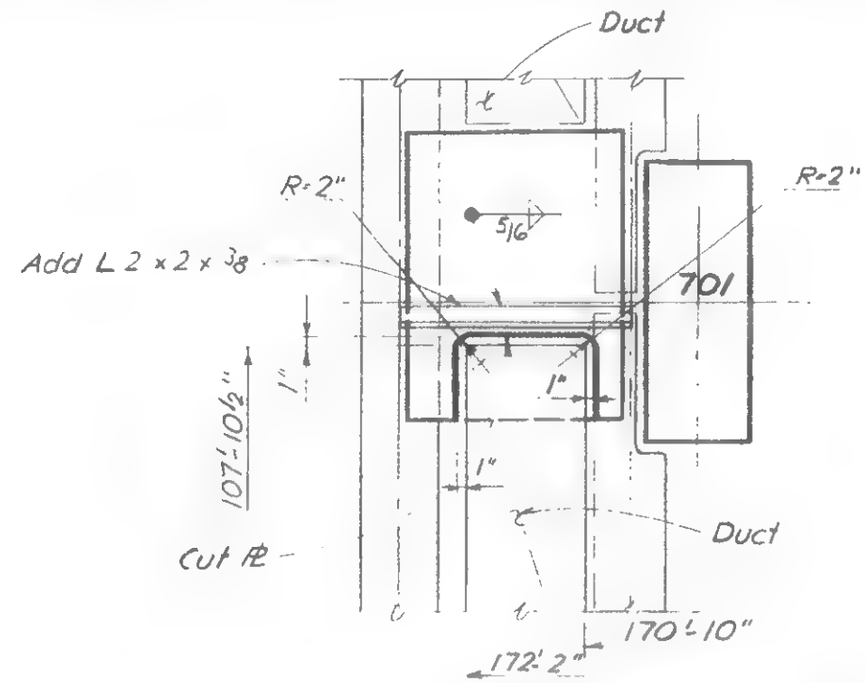


DETAIL 62 - Floor 2

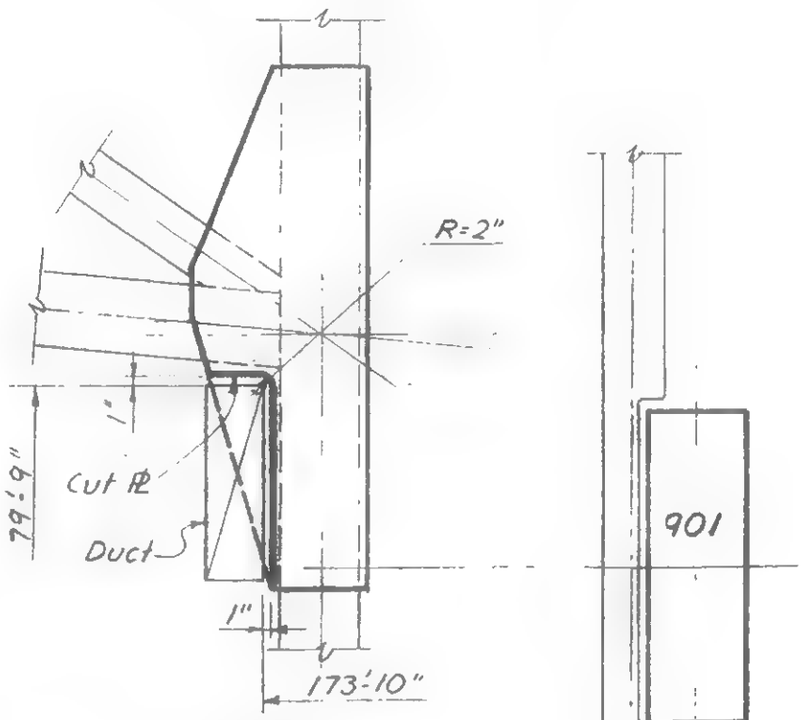


DETAIL 63
Floor 2

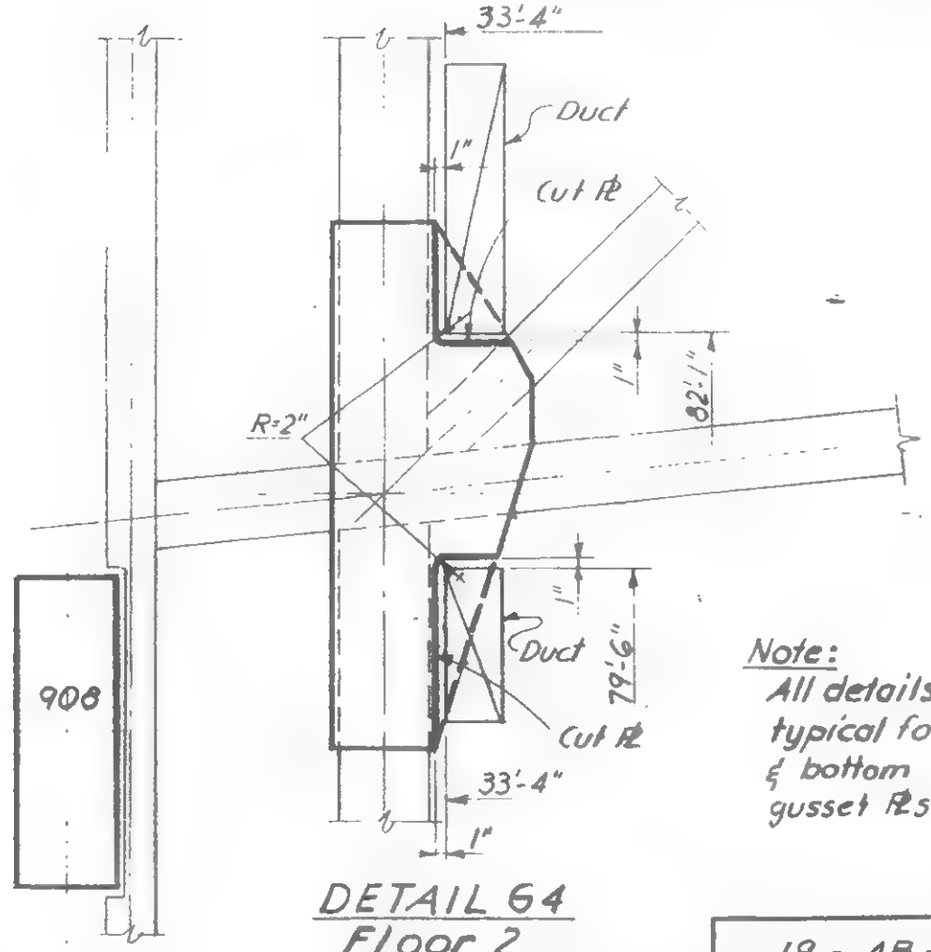


DETAIL 64
Floor 2

Note:
All details typical for top & bottom gusset PLs.

19 - AB - 919

LICENSED PROFESSIONAL ENGINEER
LESLIE E. ROBERTSON
No. 34360
UNIVERSITY OF THE STATE OF NEW YORK

DESIGNED

DRAWN

REVIEWED

SKILLING, HELLE, CHRISTIANSEN, ROBERTSON — Structural & Civil Engineers

PROJECT: THE WORLD TRADE CENTER | TITLE: REVISIONS TO STRUCTURAL STEEL DETAIL 920 | DATE: 1-17-69

REVISIONS

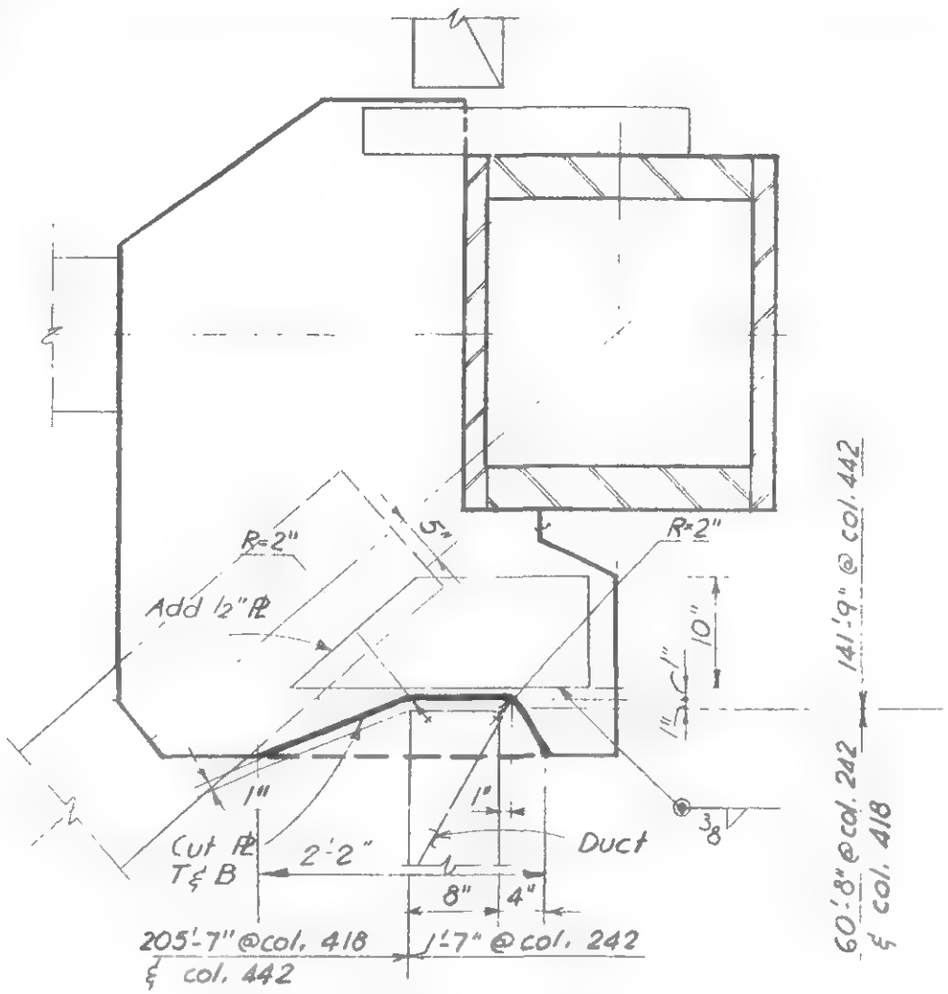


Details are typical for top & bottom gusset PLs.

DETAIL 65 - Exterior cols. 242 & 442
DETAIL 65 A (Opp. hand) - Exterior column 418

Floor 2

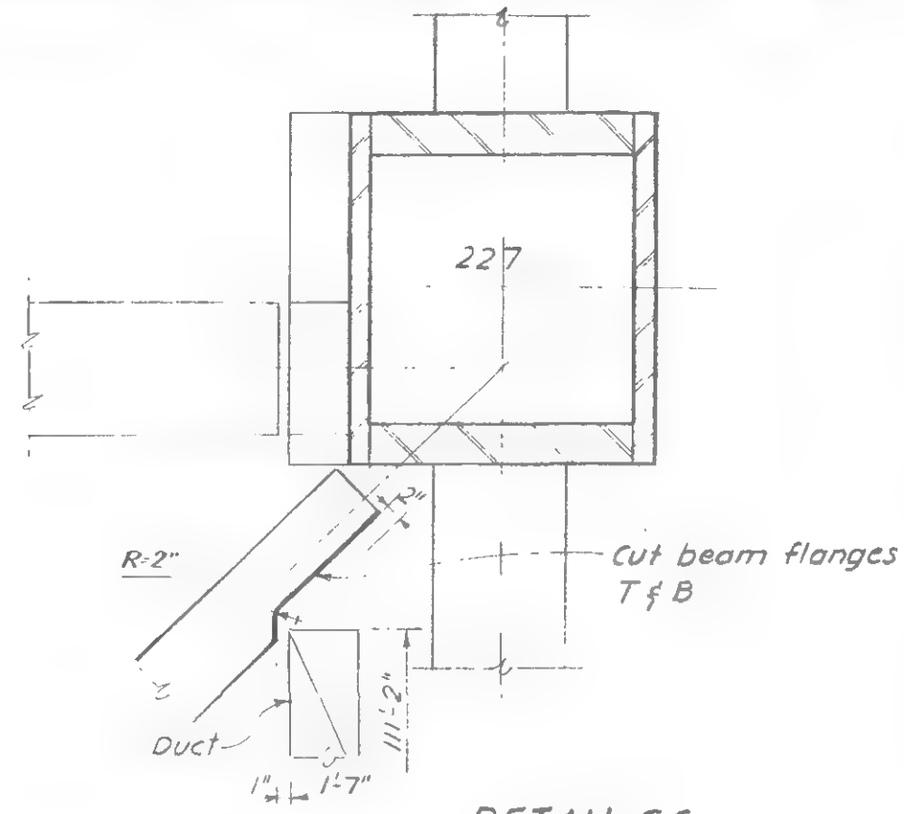


DETAIL 66
Floor 2

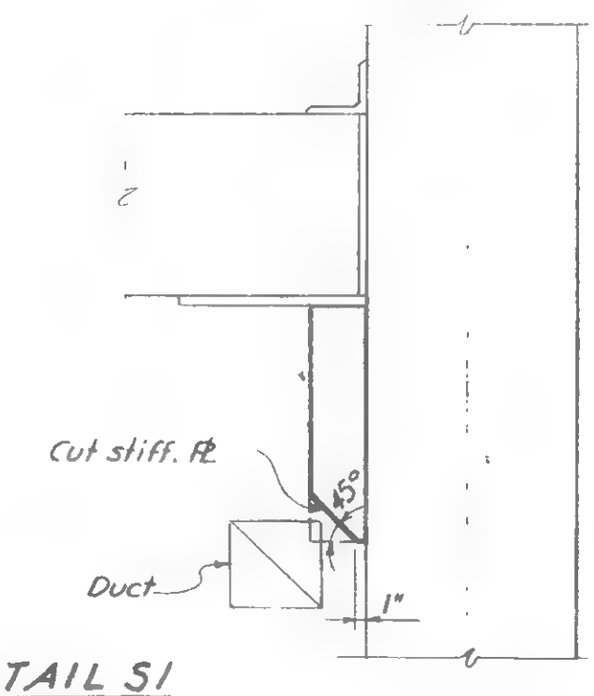


DETAIL 51
Floor 2

Elevation

At exterior cols. 109, 151, 304 & 351

19-AB-920

LICENSED PROFESSIONAL ENGINEER LESLIE E. ROBERTSON No. 34360 UNIVERSITY OF THE STATE OF NEW YORK

DESIGNED

DRAWN

REVIEWED

SKILLING, HELLE, CHRISTIANSEN, ROBERTSON — Structural & Civil Engineers

PROJECT: THE WORLD TRADE CENTER

TITLE: REVISION AFTER FABRICATION - DETAIL 921

DATE: 1-27-69

REVISIONS

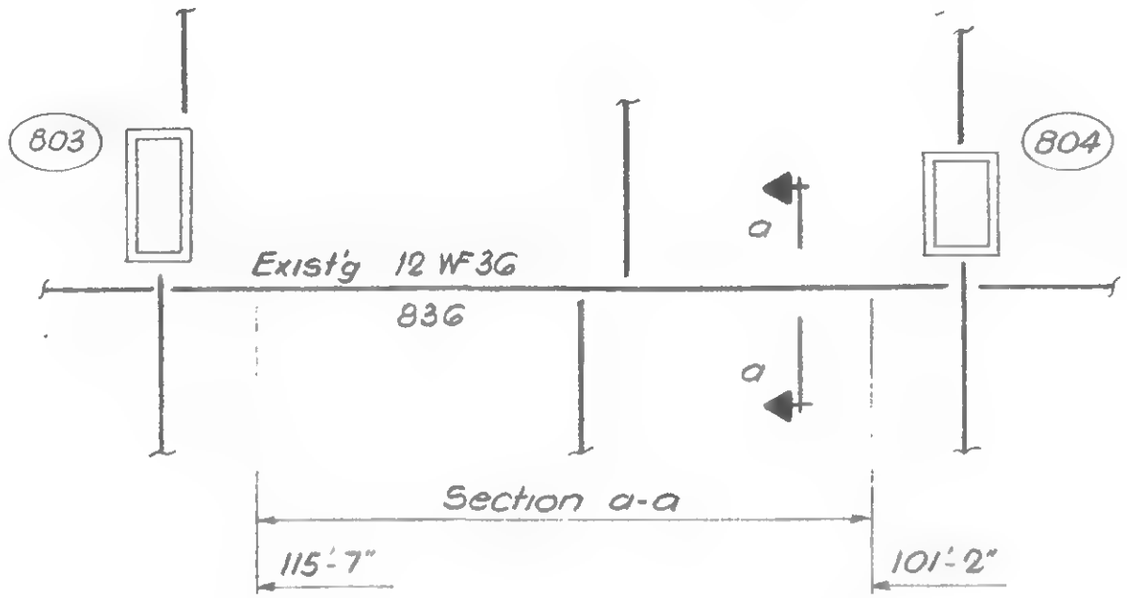


Part Plan - Elev. 284'-0"
Tower A

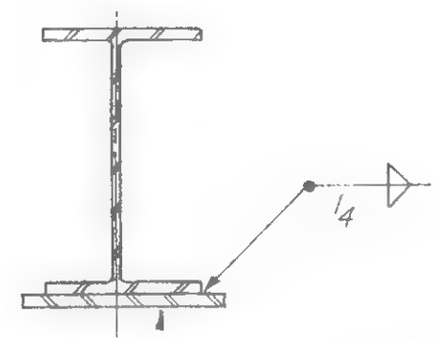


Add ½×9" PL (fy = 36 ksi)

Section a-a

LICENSED PROFESSIONAL ENGINEER
LESLIE E. ROBERTSON
No. 34360
UNIVERSITY OF THE STATE OF NEW YORK

DESIGNED: W Bonvisuto

DRAWN: G.T. HELLEBRANTH

REVIEWED: W. Brewer

19-A-921

SKILLING, HELLE, CHRISTIANSEN, ROBERTSON — Structural & Civil Engineers

PROJECT: THE WORLD TRADE CENTER

TITLE: REVISION AFTER FABRICATION - DETAIL 922

DATE: 3-19-69

REVISIONS

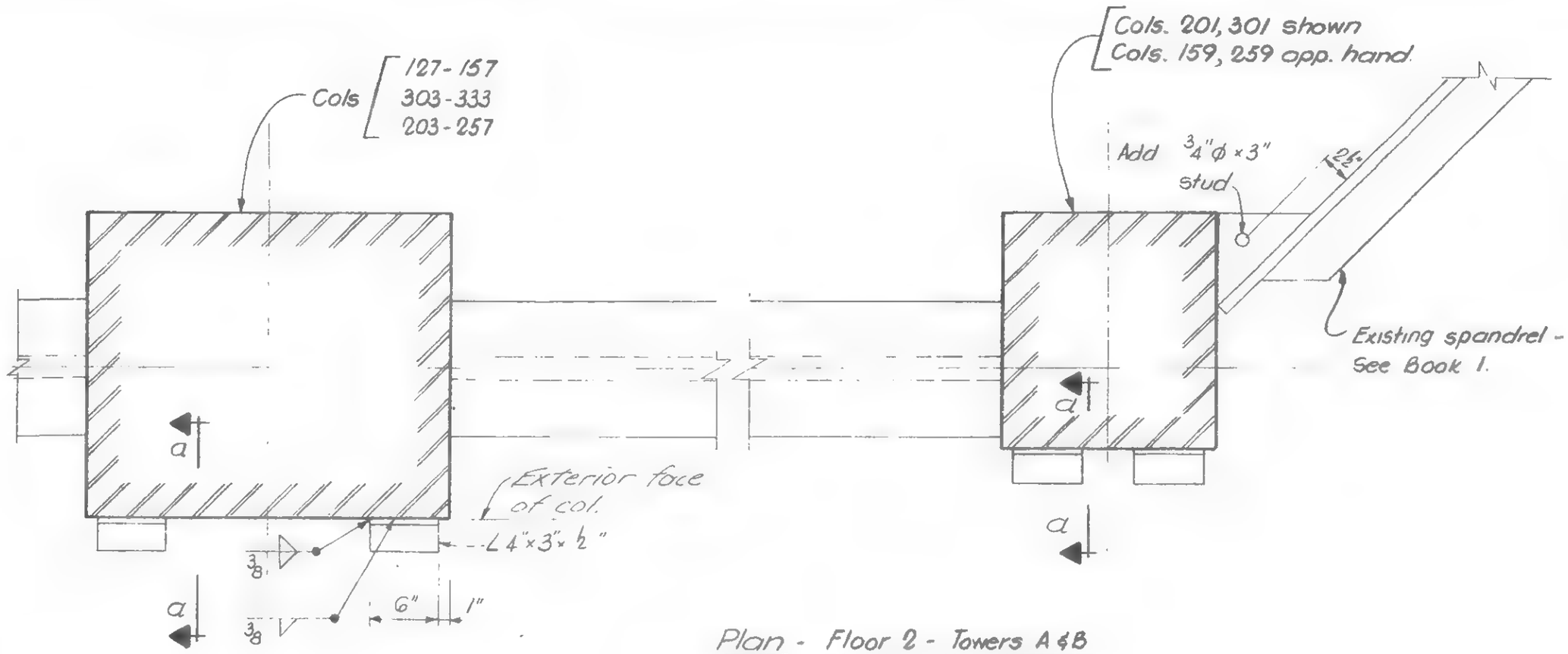


Plan - Floor 2 - Towers A & B

Add two L's per column. Details shown are typical for all added L's.

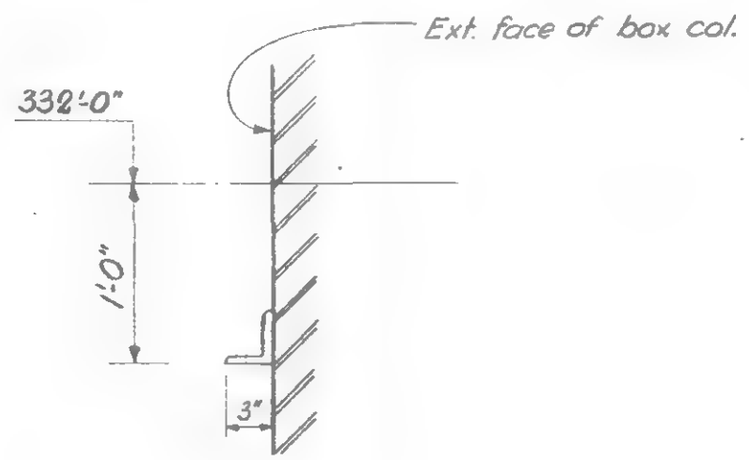


Section a-a

LICENSED PROFESSIONAL ENGINEER
LESLIE E. ROBERTSON
No. 34360
UNIVERSITY OF THE STATE OF NEW YORK

A-LA
DRAWN

G. T. Hellebranth.
REVIEWED

19-AB-922

SKILLING, HELLE, CHRISTIANSEN, ROBERTSON — Structural & Civil Engineers

PROJECT: THE WORLD TRADE CENTER

TITLE: REVISION AFTER FABRICATION - DETAIL 923

DATE: 3-19-69

REVISIONS

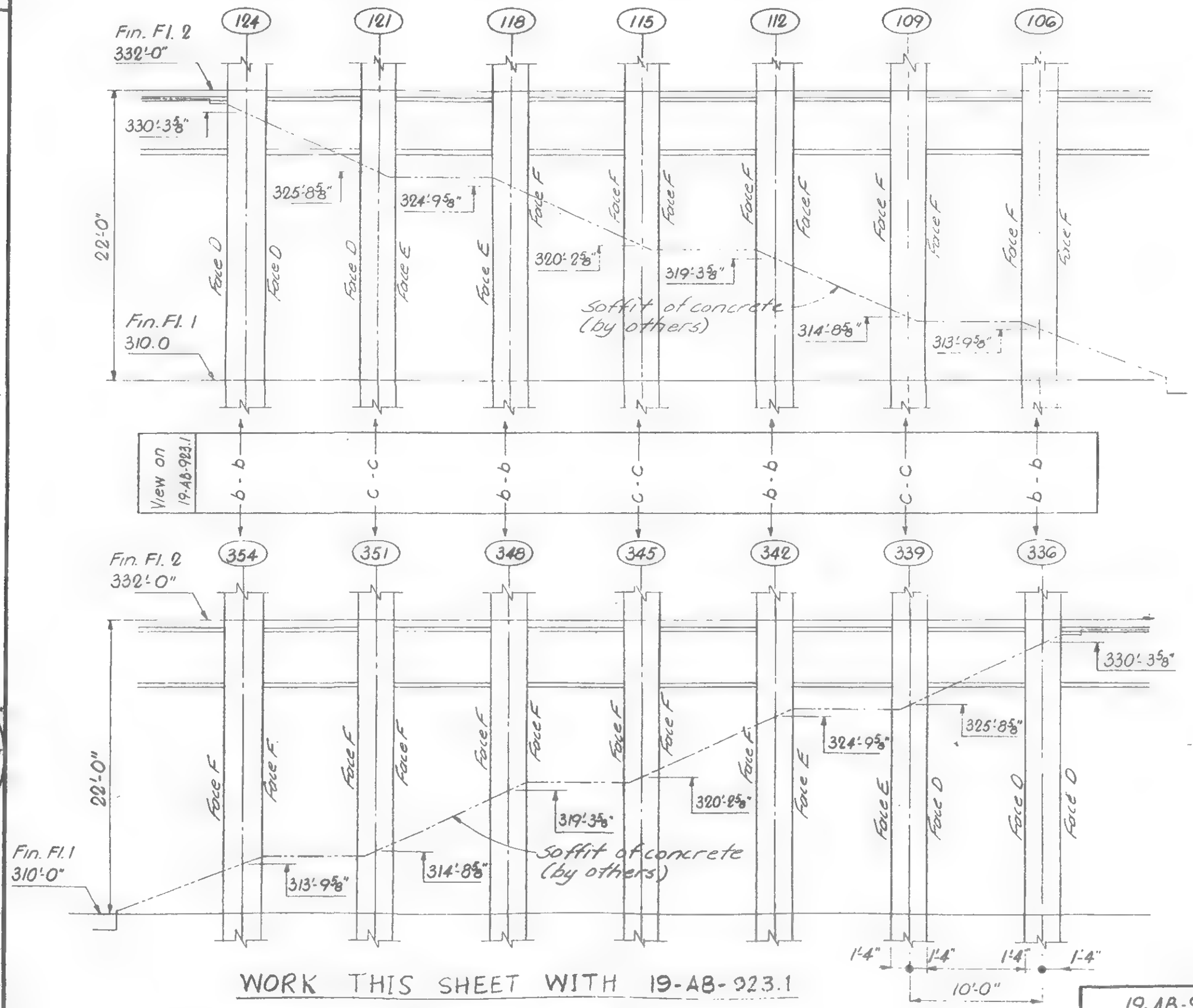


WORK THIS SHEET WITH 19-AB-923.1

LICENSED PROFESSIONAL ENGINEER
LESLIE E. ROBERTSON
No. 34360
UNIVERSITY OF THE STATE OF NEW YORK

DESIGNED: A.L.A.

DRAWN: G.T. Hellebranth

REVIEWED:

19-AB-923

SKILLING, HELLE, CHRISTIANSEN, ROBERTSON — Structural & Civil Engineers

PROJECT: THE WORLD TRADE CENTER

TITLE: REVISION AFTER FABRICATION - DETAIL 923

DATE: 3-19-69

REVISIONS

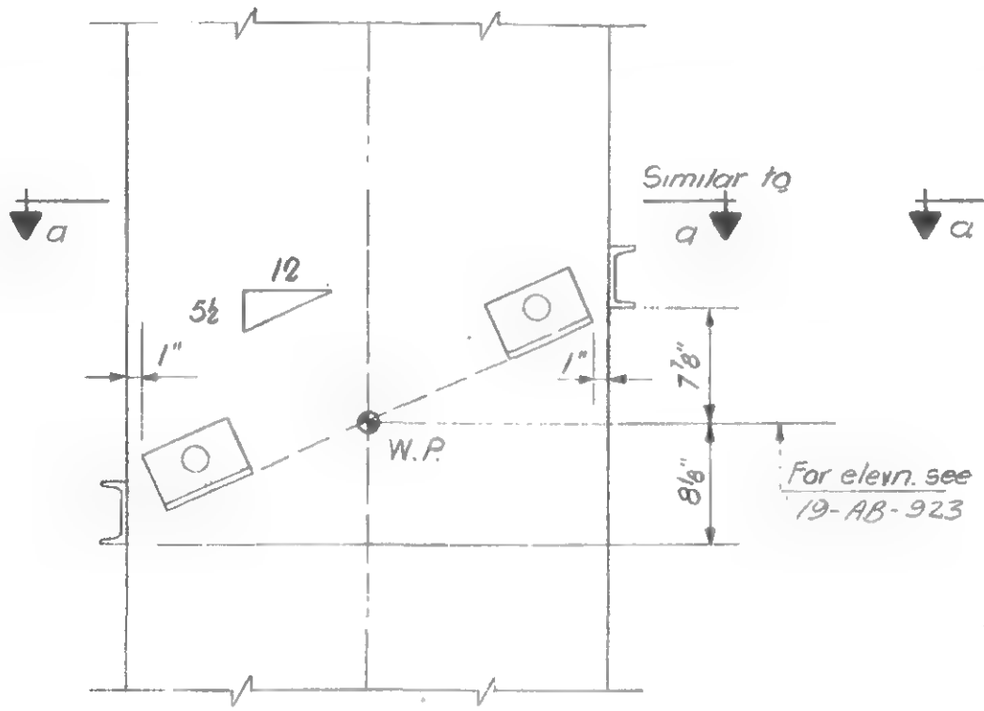


View b-b
(at top of stair run by others)

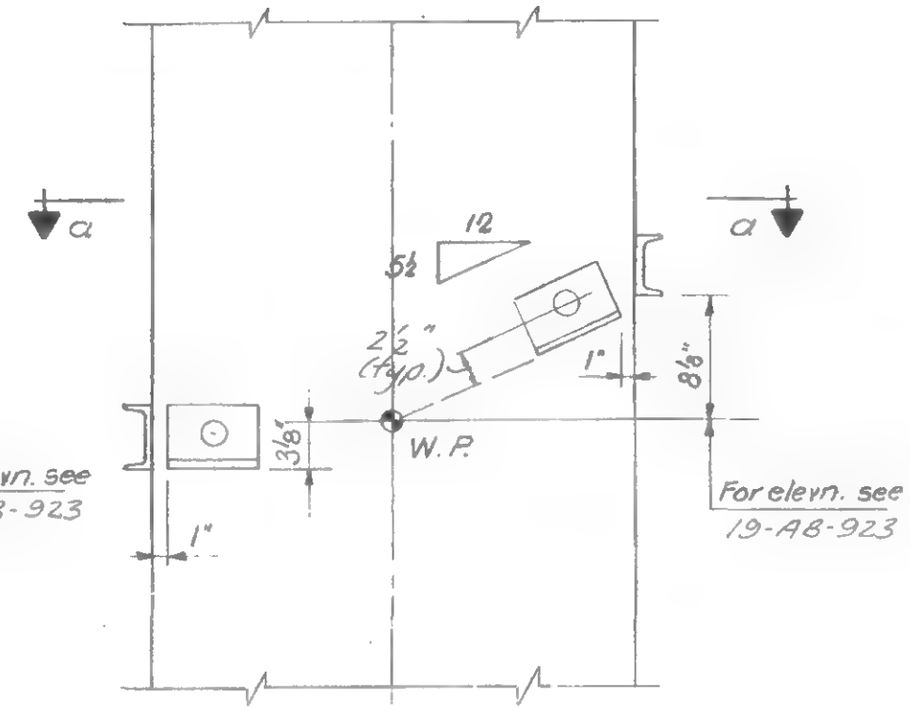


View c-c
(at bottom of stair run by others)

Notes:

1. For columns where views b-b or c-c apply see 19-AB-923
2. Use views b-b and c-c as shown for cols 336-354, opp. hand for cols 106-124.
3. For location of Faces D, E, F see 19-AB-923

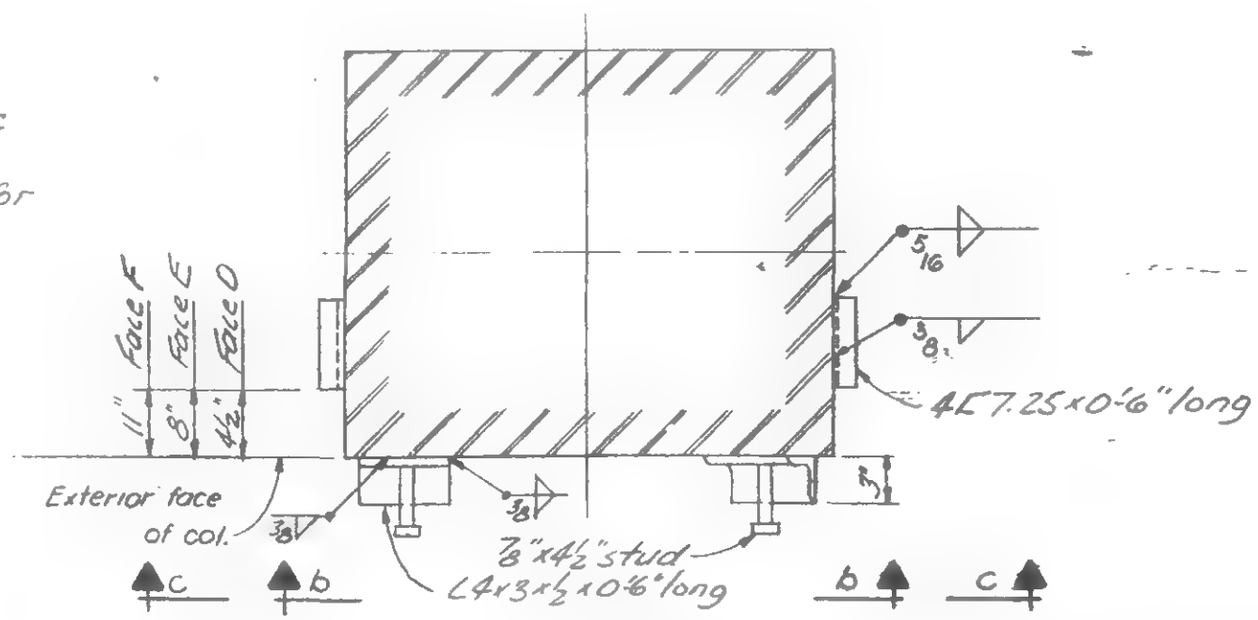


Plan a-a

19-AB-923.1

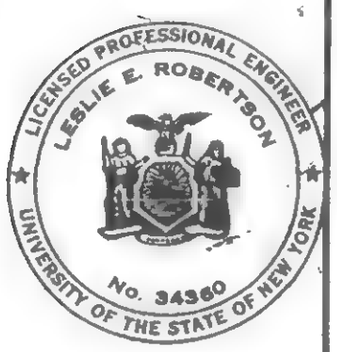


A.L.A.
DRAWN

G.T. Hellebranth.

SKILLING, HELLE, CHRISTIANSEN, ROBERTSON — Structural & Civil Engineers

PROJECT: THE WORLD TRADE CENTER | TITLE: REVISION AFTER FABRICATION - DETAIL 925 | DATE: 3-13-69

REVISIONS

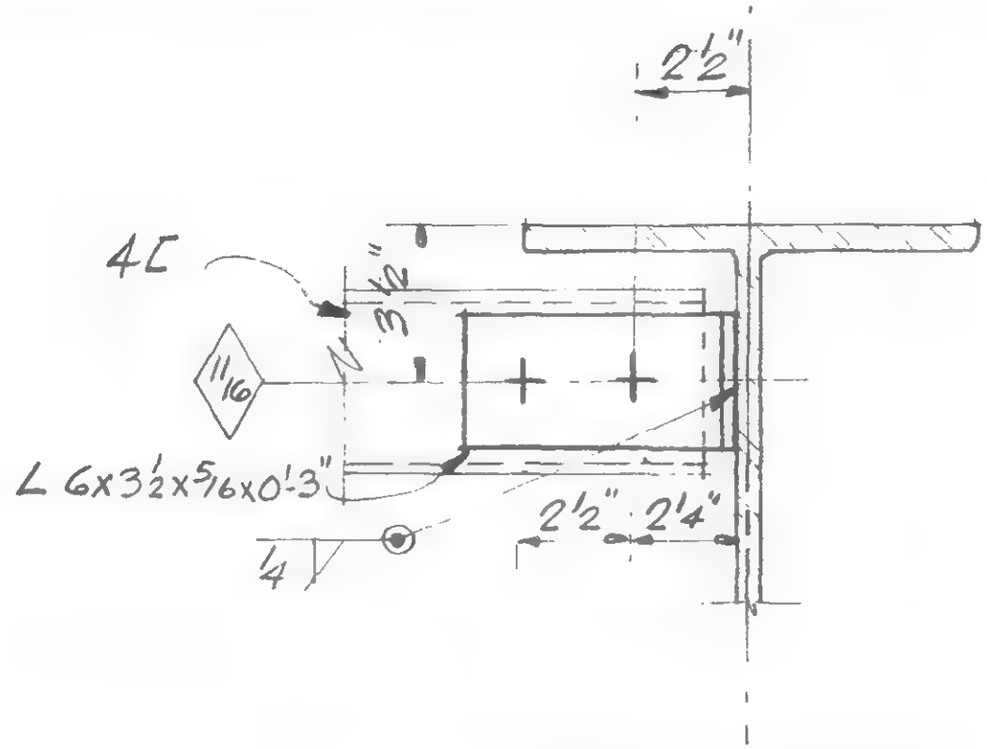


Clip Detail

2 existing 4['s relocated floor 7, Tower A, & 2 relocated floor 7, Tower B. Abandon existing clips & furnish and install 4 new clips each tower. See clip detail above and see SA-15 & SB-15 for location.

LICENSED PROFESSIONAL ENGINEER — LESLIE E. ROBERTSON — No. 34360 — UNIVERSITY OF THE STATE OF NEW YORK

DESIGNED

DRAWN

REVIEWED W. Brewer

19-AB-925

SKILLING, HELLE, CHRISTIANSEN, ROBERTSON — Structural & Civil Engineers

PROJECT – THE WORLD TRADE CENTER | TITLE REVISION AFTER FABRICATION - DETAIL 926 | DATE 3-14-69

REVISIONS

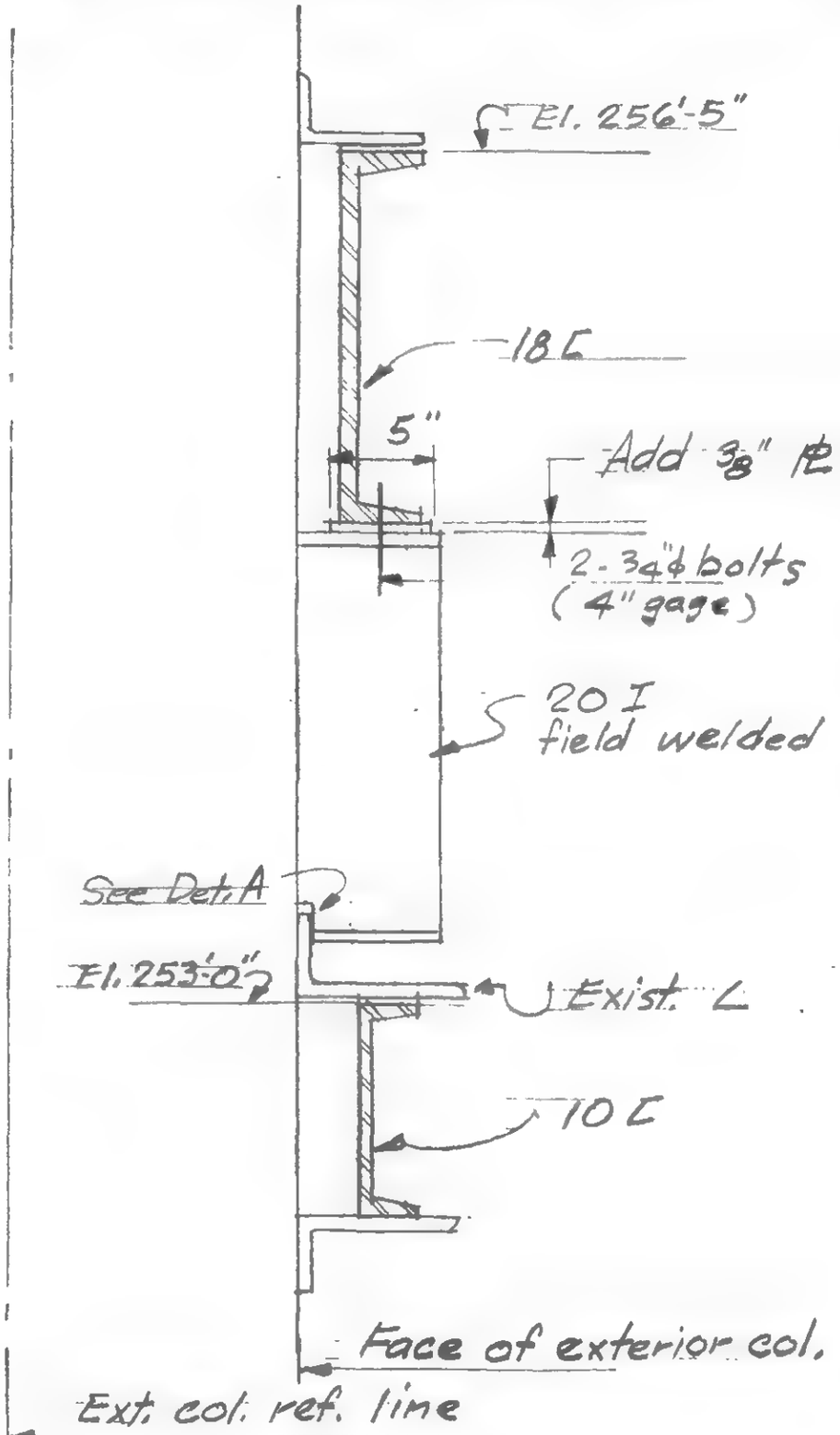


SECTION AT
SOUTH WALL TOWER A

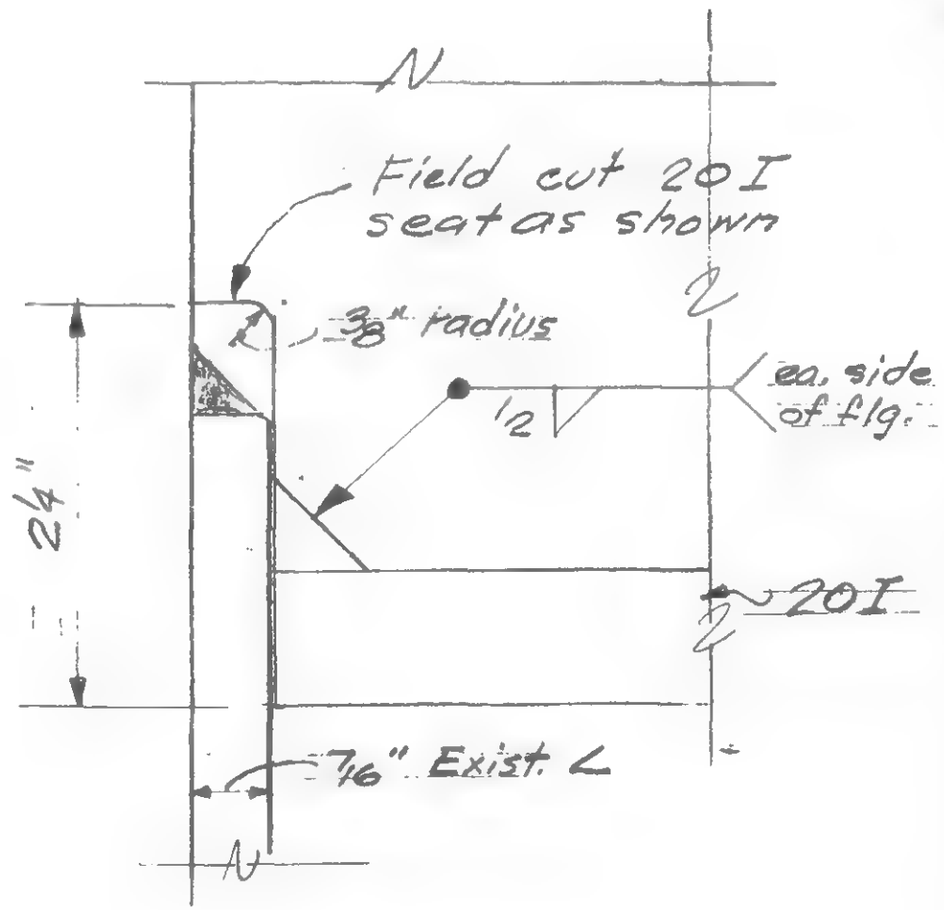


DETAIL A

Note: See SA-3 for location.
See WTC 220.00 field weld details dwg. FW-36 for details not shown.

19-A-926

LICENSED PROFESSIONAL ENGINEER
LESLIE E. ROBERTSON
No. 34360
UNIVERSITY OF THE STATE OF NEW YORK

DESIGNED H. ROET
DRAWN
REVIEWED W. Brewer

SKILLING, HELLE, CHRISTIANSEN, ROBERTSON — Structural & Civil Engineers

PROJECT: THE WORLD TRADE CENTER | TITLE: REVISION AFTER FABRICATION -DETAIL 927 | DATE: 3-21-69

REVISIONS

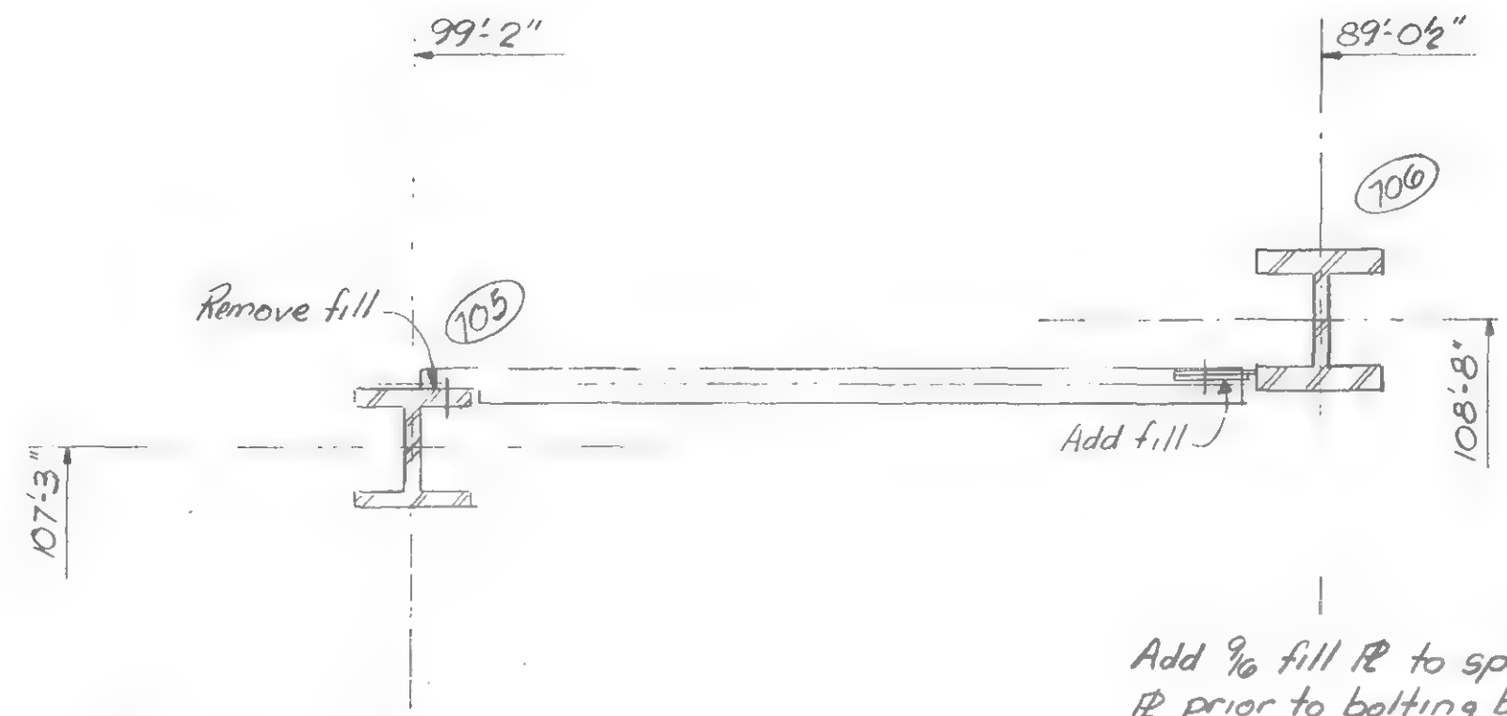


Add 9/16 fill PL to splice PL prior to bolting beam

Remove 9/16" fill PL from flange of column and bolt beam directly to flange

Floor 42

LICENSED PROFESSIONAL ENGINEER
LESLIE E. ROBERTSON
No. 34360
UNIVERSITY OF THE STATE OF NEW YORK

DESIGNED S. Kay
DRAWN S. Kay
REVIEWED

19-AB-927

SKILLING, HELLE, CHRISTIANSEN, ROBERTSON — Structural & Civil Engineers

PROJECT: THE WORLD TRADE CENTER

TITLE: REVISION AFTER FABRICATION - DETAIL 928

DATE: 5-9-69

REVISIONS

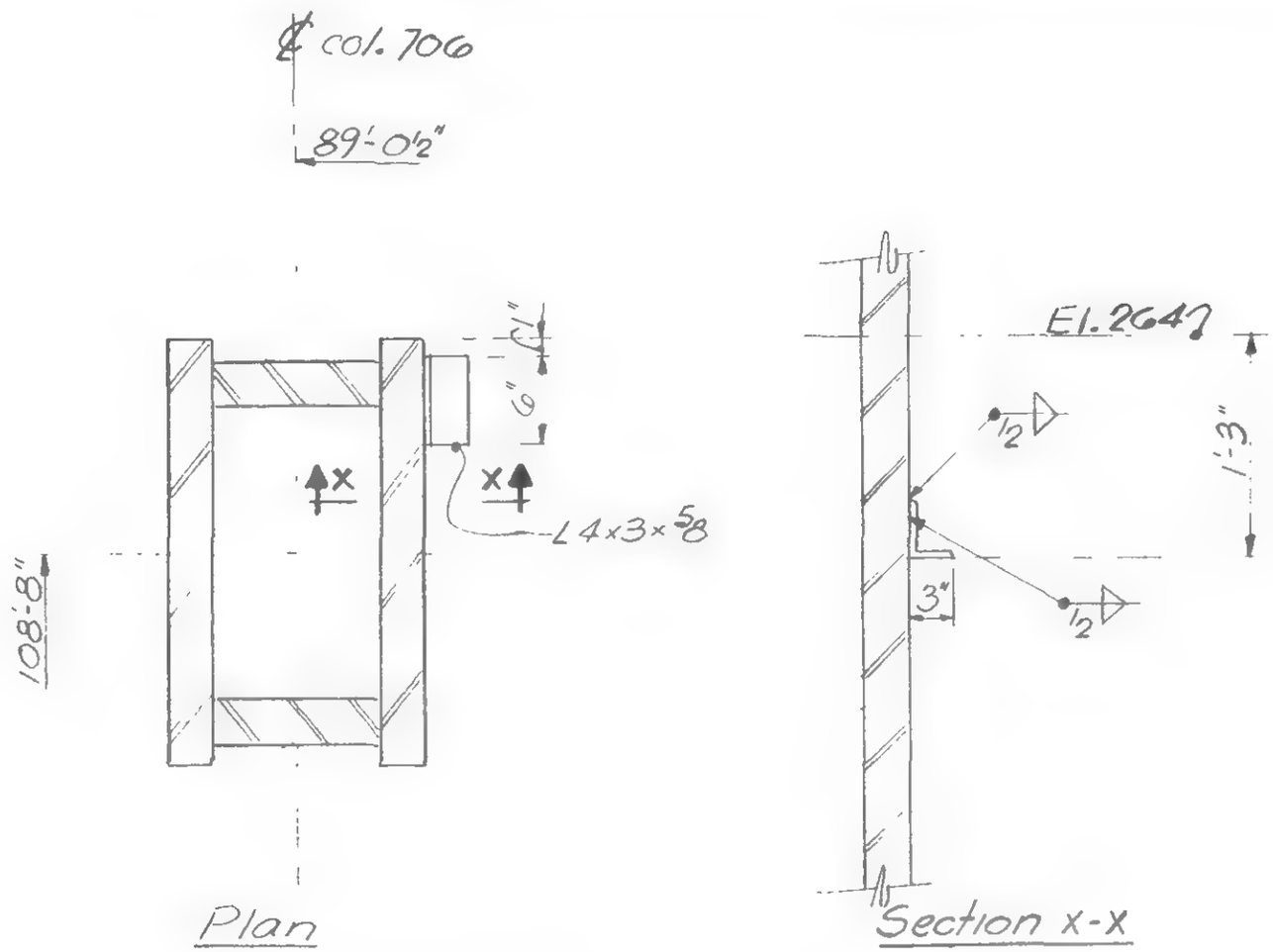


Tower B - Sub Level 3 - El. 264

LICENSED PROFESSIONAL ENGINEER
LESLIE E. ROBERTSON
No. 34360
UNIVERSITY OF THE STATE OF NEW YORK

DESIGNED: A.L.A.

DRAWN: S. Kay

REVIEWED

19-B-928

SKILLING, HELLE, CHRISTIANSEN, ROBERTSON — Structural & Civil Engineers

PROJECT: THE WORLD TRADE CENTER | TITLE: TOWER A, COLUMN 701, FLOOR 2 | DATE: 6/13/69

REVISIONS

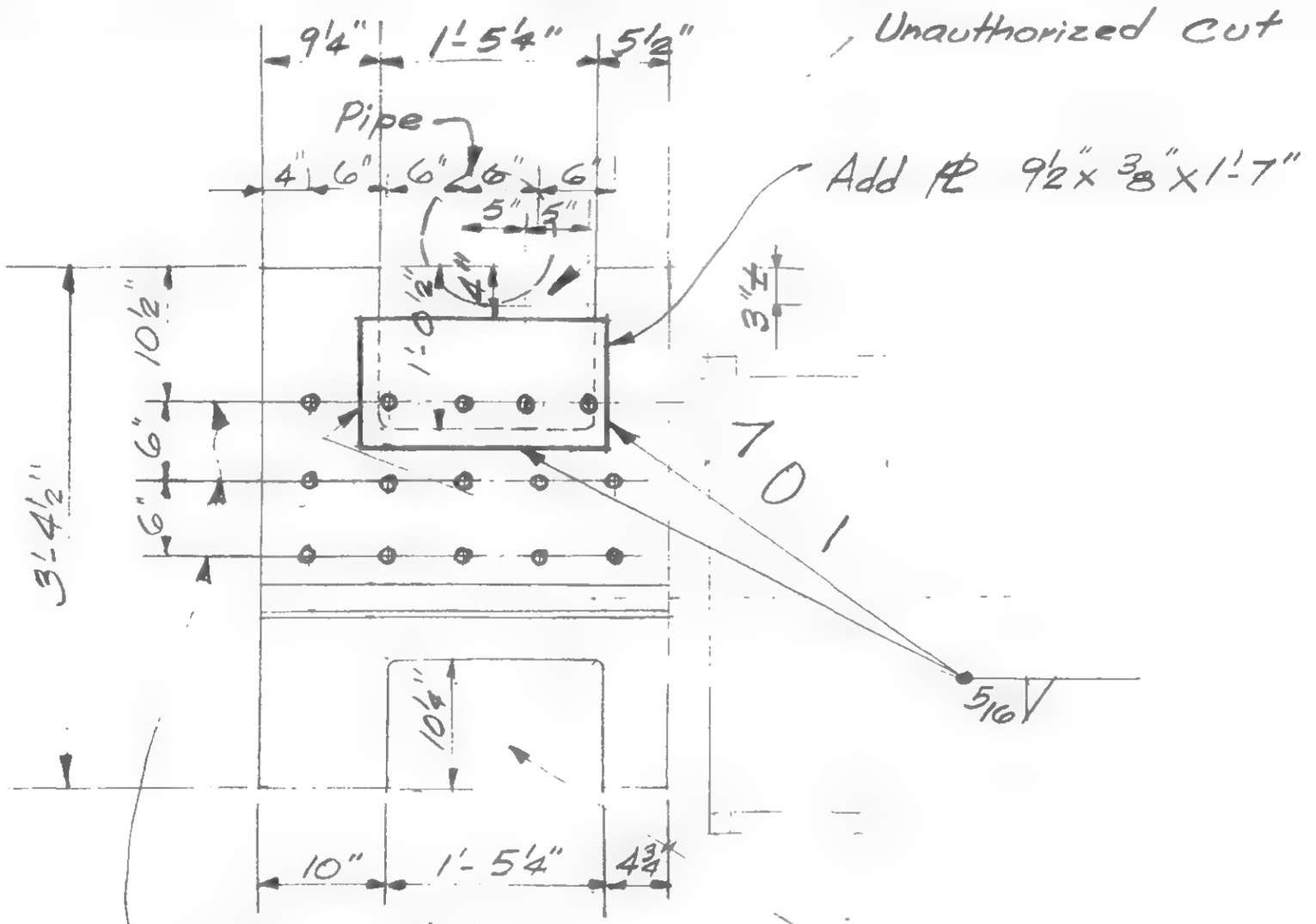


Studs Detail 54A
18-AB2-54.1
Modify spacing as shown

Existing cut
19-AB-919

LICENSED PROFESSIONAL ENGINEER
LESLIE E. ROBERTSON
No. 34368
UNIVERSITY OF THE STATE OF NEW YORK

DESIGNED

DRAWN

REVIEWED W. Brewer

19-A-929

SKILLING, HELLE, CHRISTIANSEN, ROBERTSON — Structural & Civil Engineers

PROJECT: THE WORLD TRADE CENTER | TITLE: REVISED TROLLEY BEAM SUPPORT | DATE: 6-6-69

REVISIONS

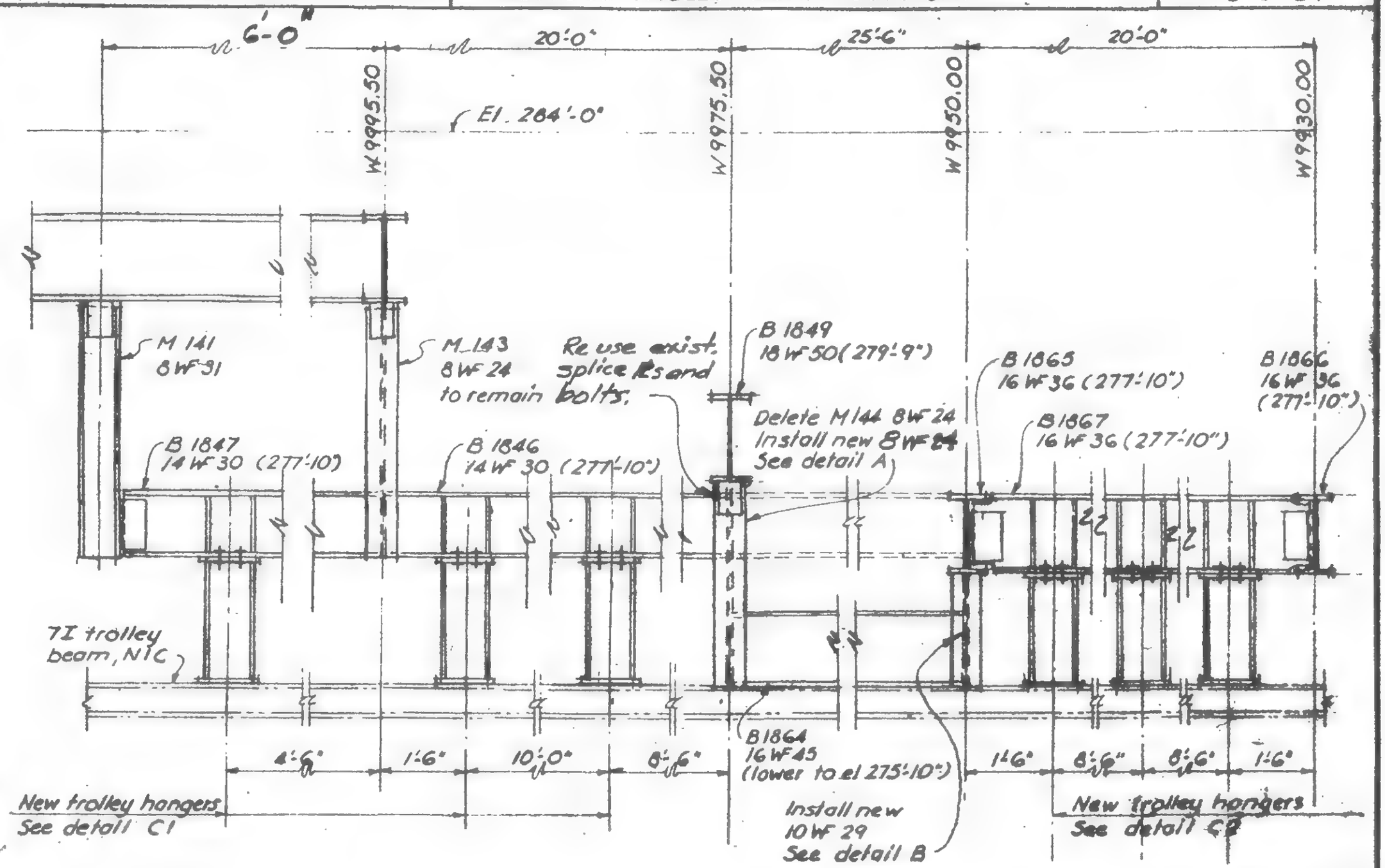


SECTION A-A

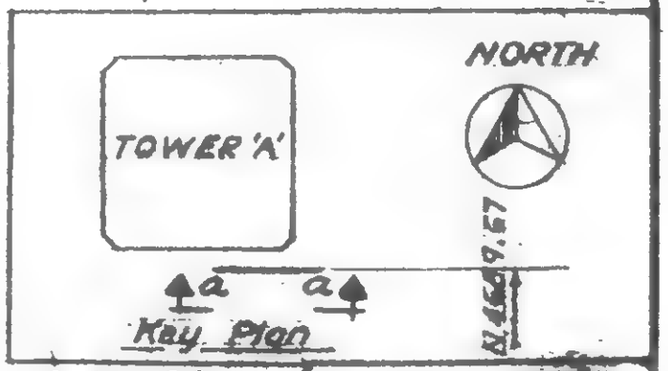


19-K-929-1

LICENSED PROFESSIONAL ENGINEER — LESLIE E. ROBERTSON — No. 34360 — STATE OF NEW YORK

DESIGNED

DRAWN

REVIEWED

SKILLING, HELLE, CHRISTIANSEN, ROBERTSON — Structural & Civil Engineers

PROJECT: THE WORLD TRADE CENTER | TITLE: REVISED TROLLEY BEAM SUPPORT - DETAILS | DATE: 6-6-69

REVISIONS

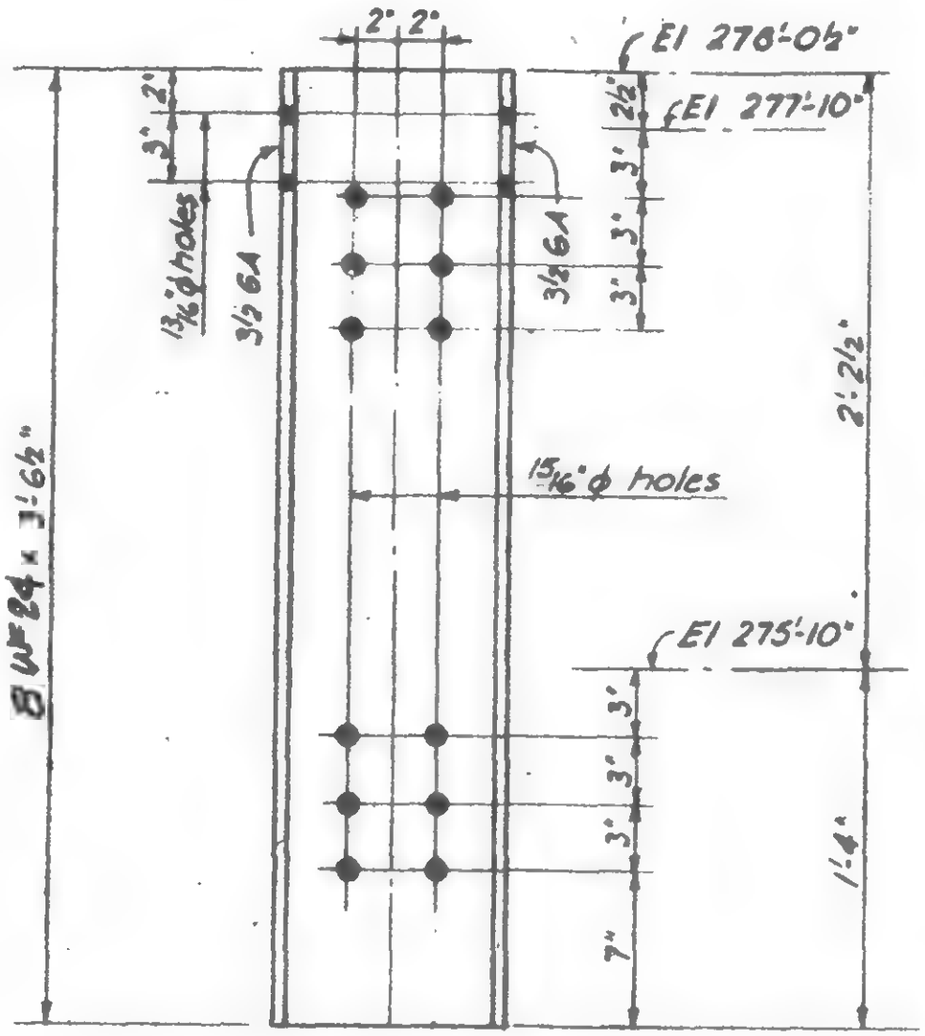


DETAIL A

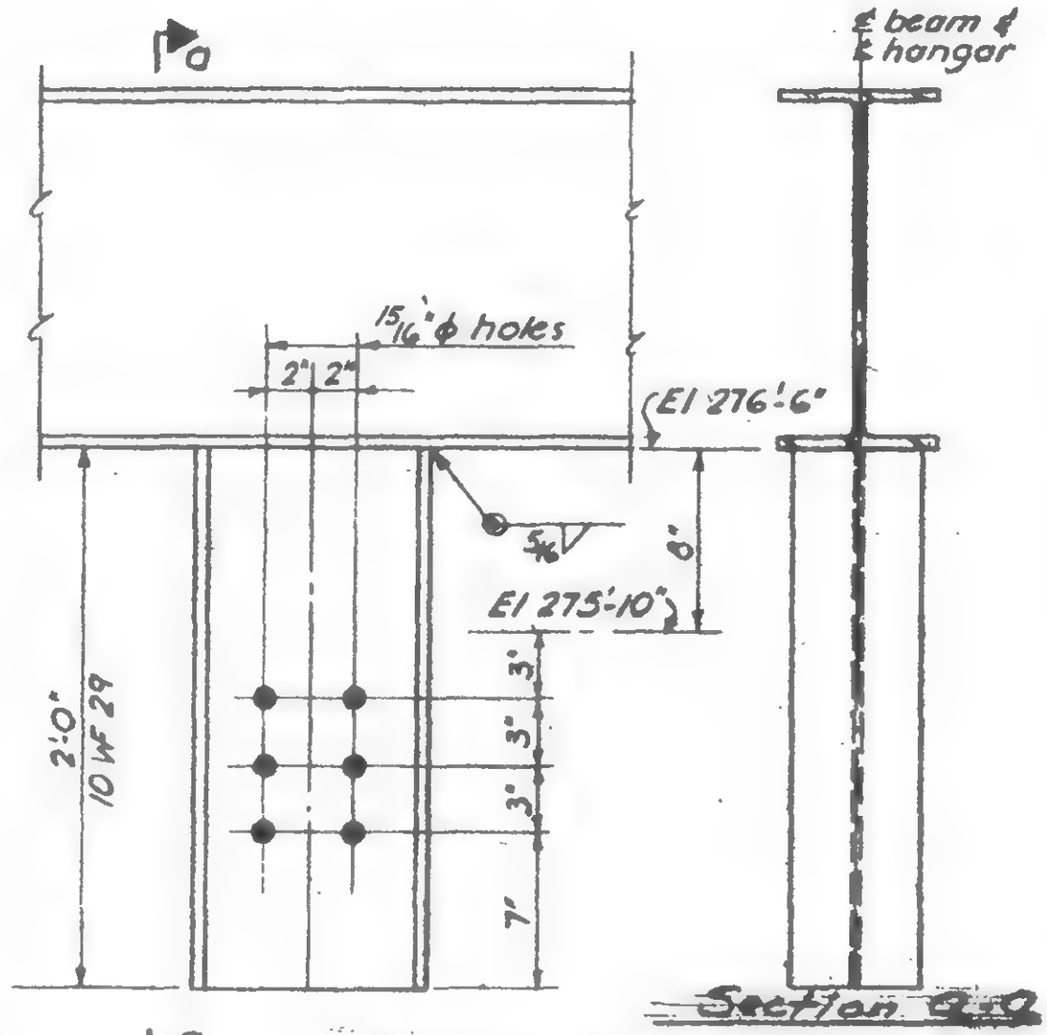


DETAIL B

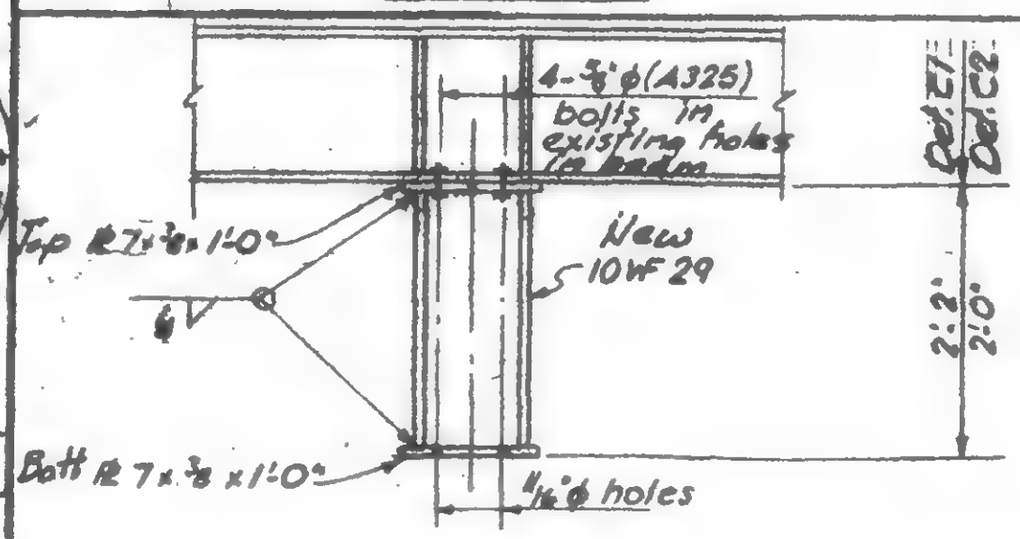


DETAIL C1 & C2

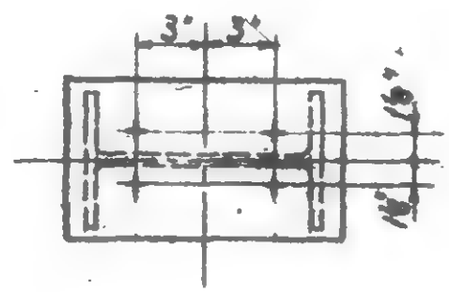


Plan of Top & Bott. Plate

LESLIE E. ROBERTSON — REGISTERED PROFESSIONAL ENGINEER — No. 34990 — STATE OF NEW YORK

DRAWN: E. Smith

REVISIONS

TRK-9292

SKILLING, HELLE, CHRISTIANSEN, ROBERTSON — Structural & Civil Engineers

PROJECT: THE WORLD TRADE CENTER

TITLE: REVISED DETAIL E53 AT COL. 246, 244, 446, 444

DATE: 6-10-69

REVISIONS

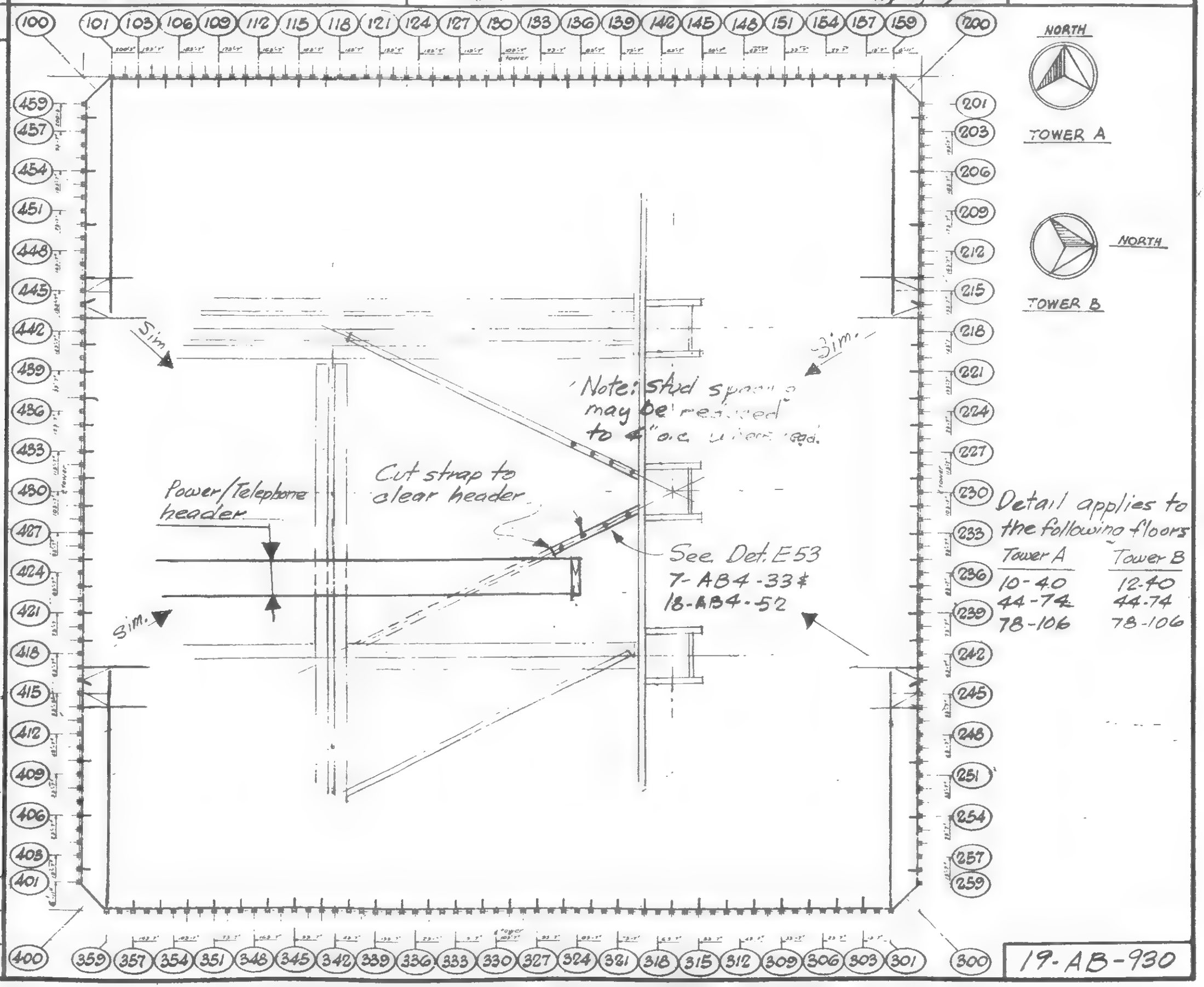


DESIGNED

DRAWN

REVIEWED

19-AB-930

SKILLING, HELLE, CHRISTIANSEN, ROBERTSON — Structural & Civil Engineers

PROJECT: THE WORLD TRADE CENTER

TITLE: REVISION AFTER FABRICATION - DETAIL 931

DATE: 6/10/69

REVISIONS

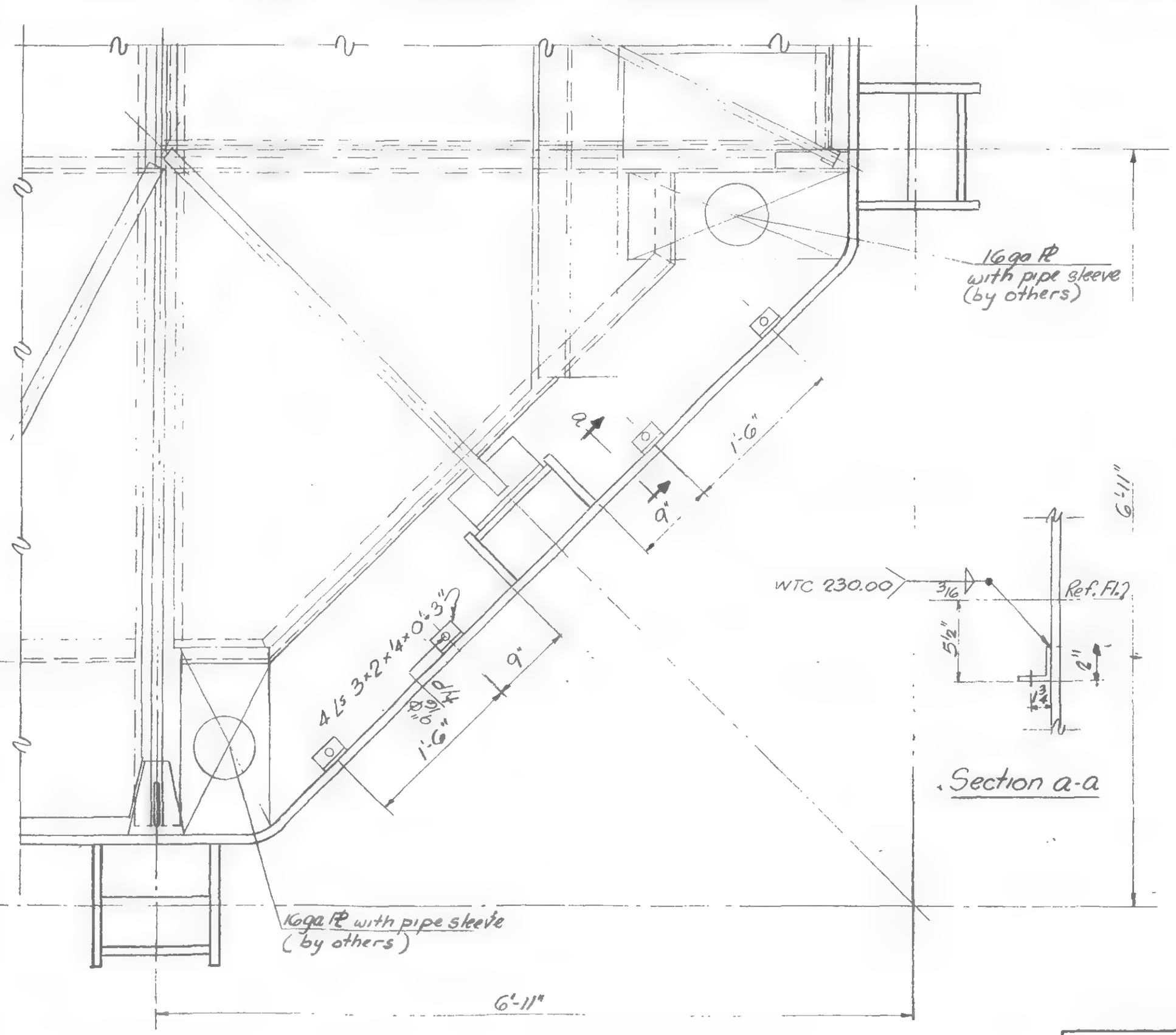


LICENSED PROFESSIONAL ENGINEER — LESLIE E. ROBERTSON — No. 34360 — UNIVERSITY OF THE STATE OF NEW YORK

DRAWN

REVIEWED

19-AB-931

SKILLING, HELLE, CHRISTIANSEN, ROBERTSON — Structural & Civil Engineers

PROJECT: THE WORLD TRADE CENTER | TITLE: REVISED BEAM CONN. TO SLURRY WALL - DETAIL H | DATE: 6-20-69

REVISIONS

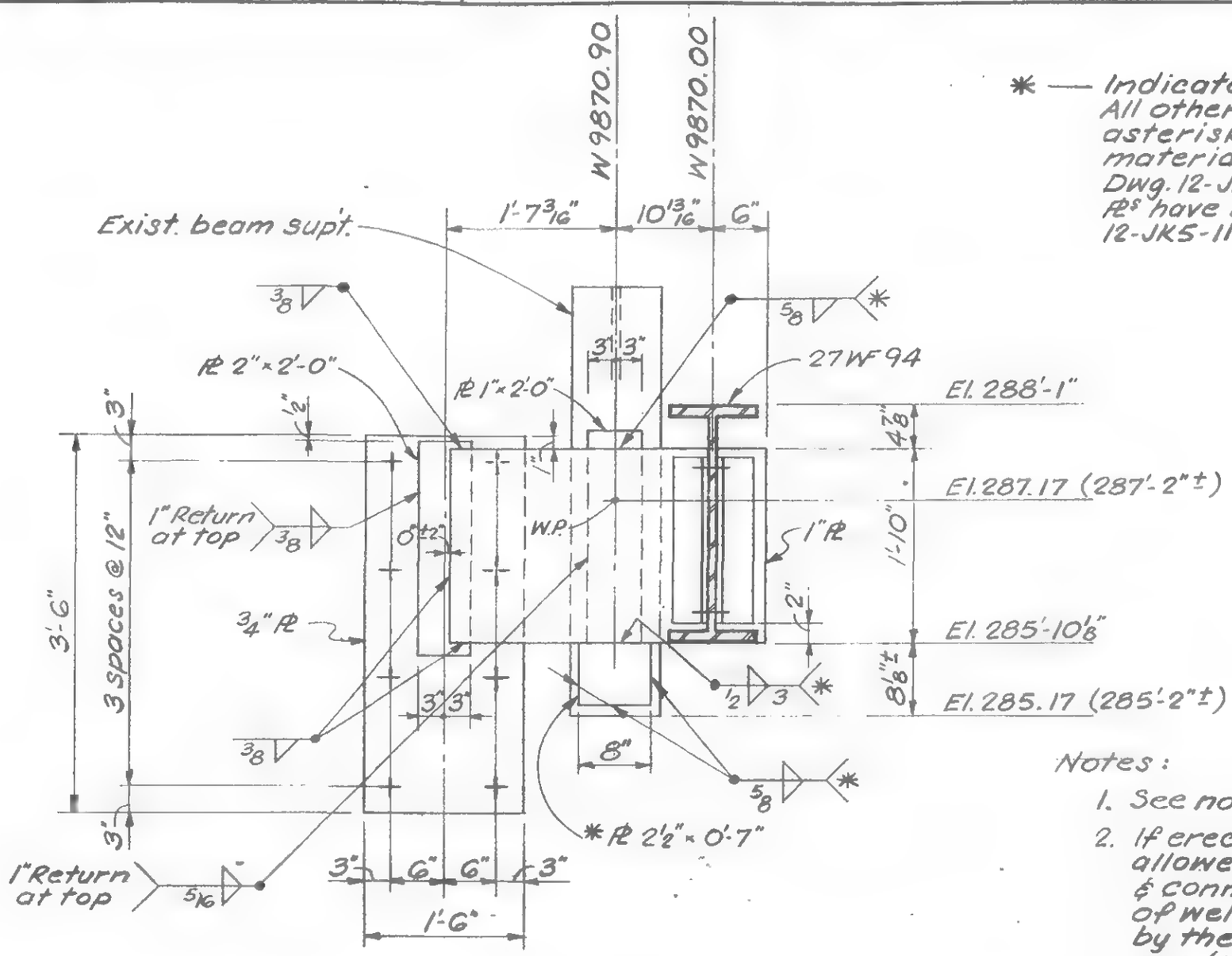


* — Indicates new PL and welds. All other items without asterisk, are existing materials as shown on Dwg. 12-JK5-11 (location of PLs have been revised from 12-JK5-11)

Notes:

1. See notes on 12-JK5-1.
2. If erection clearance is allowed between beam web & connection angles, size of weld has to be increased by the dimension of this gap (max. clearance = 1/8").
3. Due to the deviation of exist. beam support, the weld size shown has to be increased by the dimensions of the gap between PL and support. In no case should this gap be greater than 1/8".

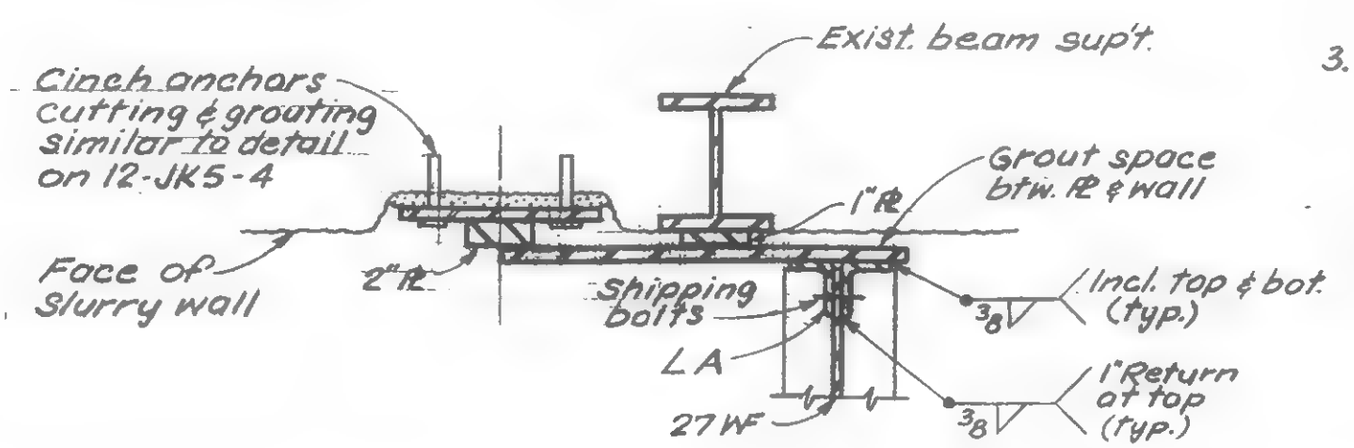


LICENSED PROFESSIONAL ENGINEER — LESLIE E. ROBERTSON — No. 34360 — UNIVERSITY OF THE STATE OF NEW YORK

DESIGNED

DRAWN S.C.

REVIEWED E.L.

19-J-932

SKILLING, HELLE, CHRISTIANSEN, ROBERTSON — Structural & Civil Engineers

PROJECT: THE WORLD TRADE CENTER | TITLE: CONCRETE HOIST CATHEAD SUPPORTS | DATE: 5-12-69

REVISIONS
5-21-69
8-11-69
12-7-70

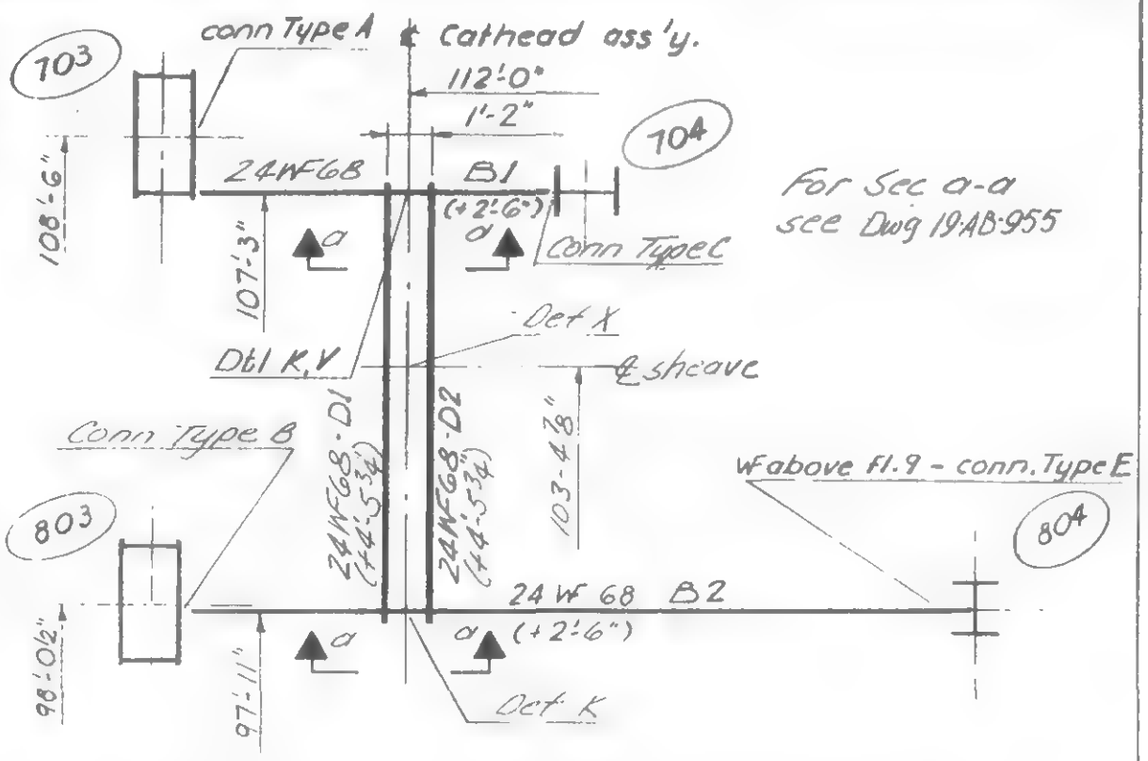


For Sec a-a see Dwg 19-AB-955

PLAN - FRAMING FLOOR 75 & BELOW

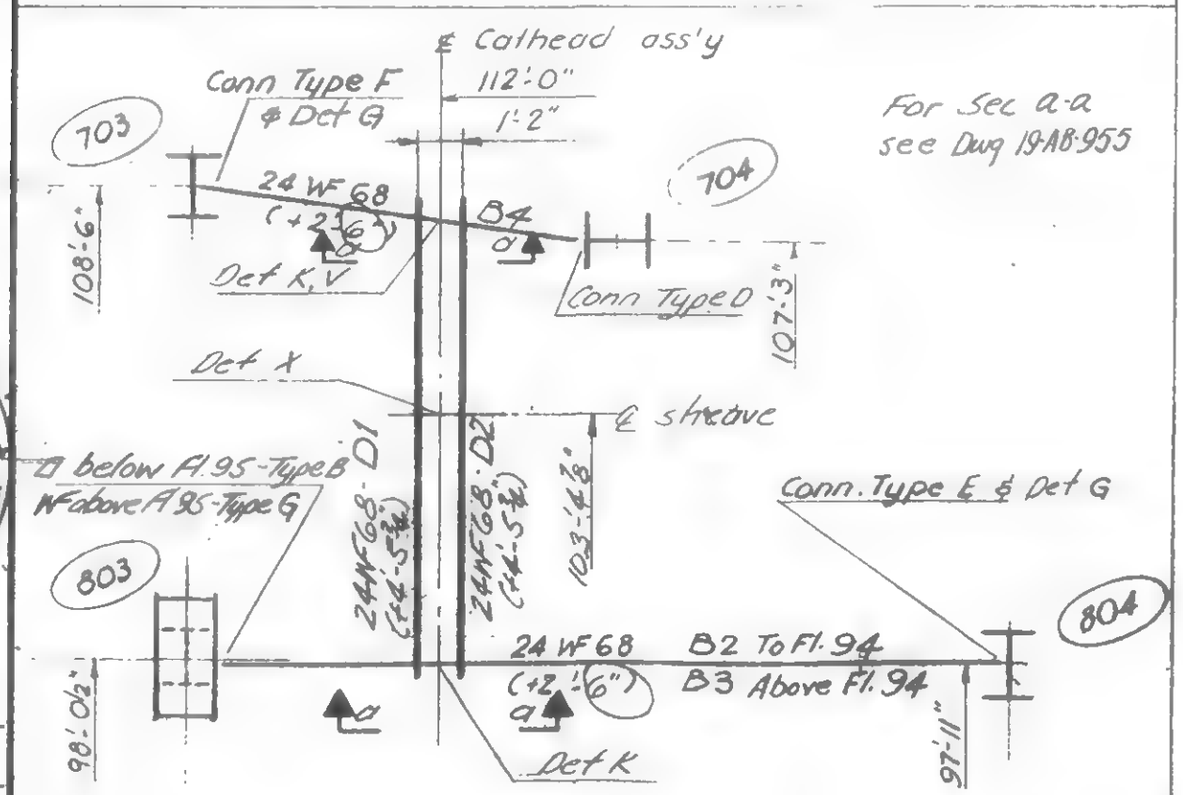


For Sec a-a see Dwg 19-AB-955

PLAN - FRAMING ABOVE FLOOR 75 to 105

**Notes:**

1. Beams and column connections shall be provided as shown at locations given in Schedule, 19-AB-954
2. Beams shall be re-used at all support levels, as shown in schematic elevation, 19-AB-952, and Schedule, 19-AB-954 & 19-AB-951.2
3. Where the beam length increases above Fl. 75 and 95, the same basic support beam may be extended as shown in Detail (G). A single set of 2-18 [ members may be used for each beam, with bolt hole patterns corresponding to each extension length required.
4. Provide slotted holes as shown in Schedule and Details, 19-AB-954 & 955
5. All vertical welds at column connections shall be returned ¾" at top.
6. All bolts shall be ASTM A325, friction type, fully tensioned at each level.
7. Connections at box column faces, WF column flanges and web connections projecting beyond the column flanges shall be removed immediately after the support is no longer needed. Removal of connections may be performed by cutting "T" or angles at the toe of the fillet of the outstanding leg, or by cutting the connection weld. Any cutting or gouging of permanent members shall be repaired by filling with weld metal and grinding smooth.
8. For conn. dtls, see Dwgs 19-AB-951, 954, 955, 956

LICENSED PROFESSIONAL ENGINEER — LESLIE E. ROBERTSON — No. 34360 — UNIVERSITY OF THE STATE OF NEW YORK

DESIGNED
DRAWN F. Smith
REVIEWED

19-AB-951 (1)

SKILLING, HELLE, CHRISTIANSEN, ROBERTSON — Structural & Civil Engineers

PROJECT: THE WORLD TRADE CENTER | TITLE: CONCRETE HOIST CATHEAD SUPPORTS | DATE: 12-7-70

REVISIONS

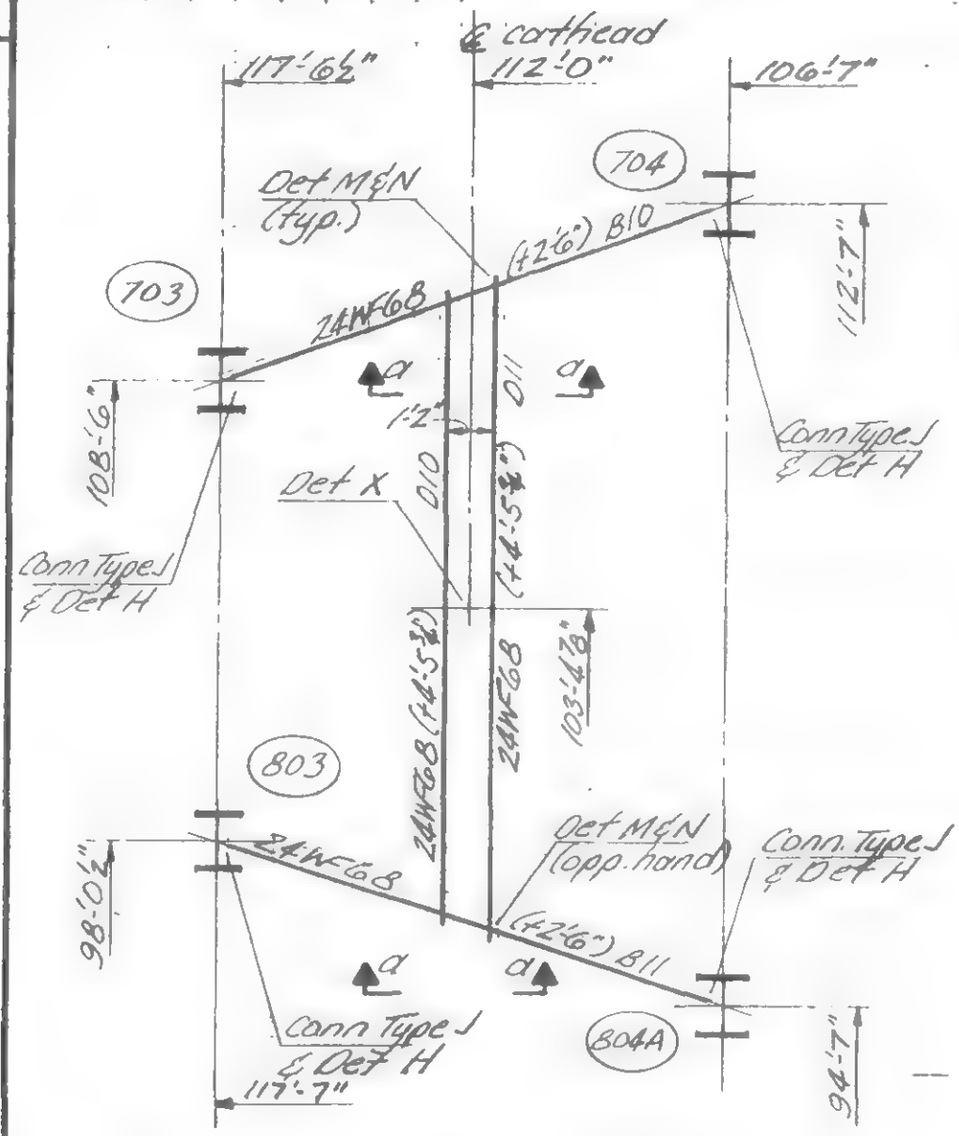


## Plan - Framing Fl. 107 to 109

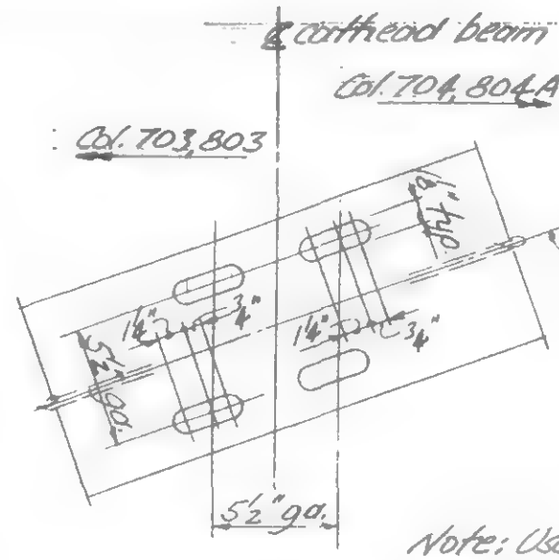


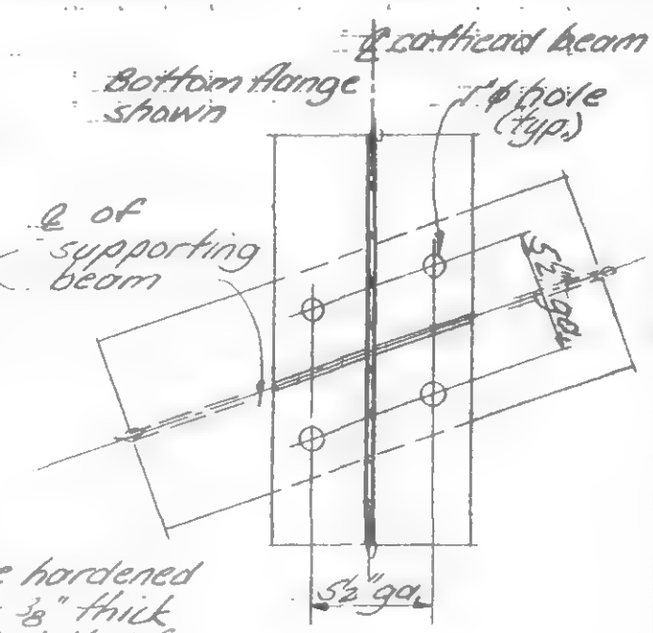


Note: Use hardened washers ⅛" thick against slotted face

## Detail M

Slotted holes in top flange of supporting beam at cathead connection

## Detail N

Connection holes in cathead beams between cols 703 & 704

## COLUMN CONNECTION SCHEDULE

| Location | | | Type * | e (in) | Bolts | | Connection | | Remarks |
|---|---|---|---|---|---|---|---|---|---|
| Col. | Floor Tower A | Floor Tower B | | | Size | N | L | Weld (1) | |
| 703 | 107,109 | 107,109 | J | 6" | ¾"ϕ | 6 | 1'-5½" | 5/16" | A |
| 704 | 107,109 | 107,109 | J | 6" | ¾"ϕ | 6 | 1'-5½" | 5/16" | |
| 803 | 107,109 | 107,109 | J | 6" | ¾"ϕ | 6 | 1'-5½" | 5/16" | A |
| 804 | 107,109 | 107,109 | J | 6" | ¾"ϕ | 6 | 1'-5½" | 5/16" | |

* use w=6" at Det. H for both Type C w/ J

Remark A All bolt holes at this end shall be slotted.

Note.
1. For schematic elevations of cathead support system see Dwg. 19-AB-952
2. For Section a-a see Dwg. 19-AB-955
3. For column connection schedule below Floor 105 see Dwg. 19-AB-954

LICENSED PROFESSIONAL ENGINEER — LESLIE E. ROBERTSON — No. 34560 — UNIVERSITY OF THE STATE OF NEW YORK

DESIGNED

DRAWN

REVIEWED

19-AB-951.2

SKILLING, HELLE, CHRISTIANSEN, ROBERTSON — Structural & Civil Engineers

PROJECT: THE WORLD TRADE CENTER | TITLE: CONCRETE HOIST CATHEAD SUPPORT | DATE: 12-7-70

REVISIONS

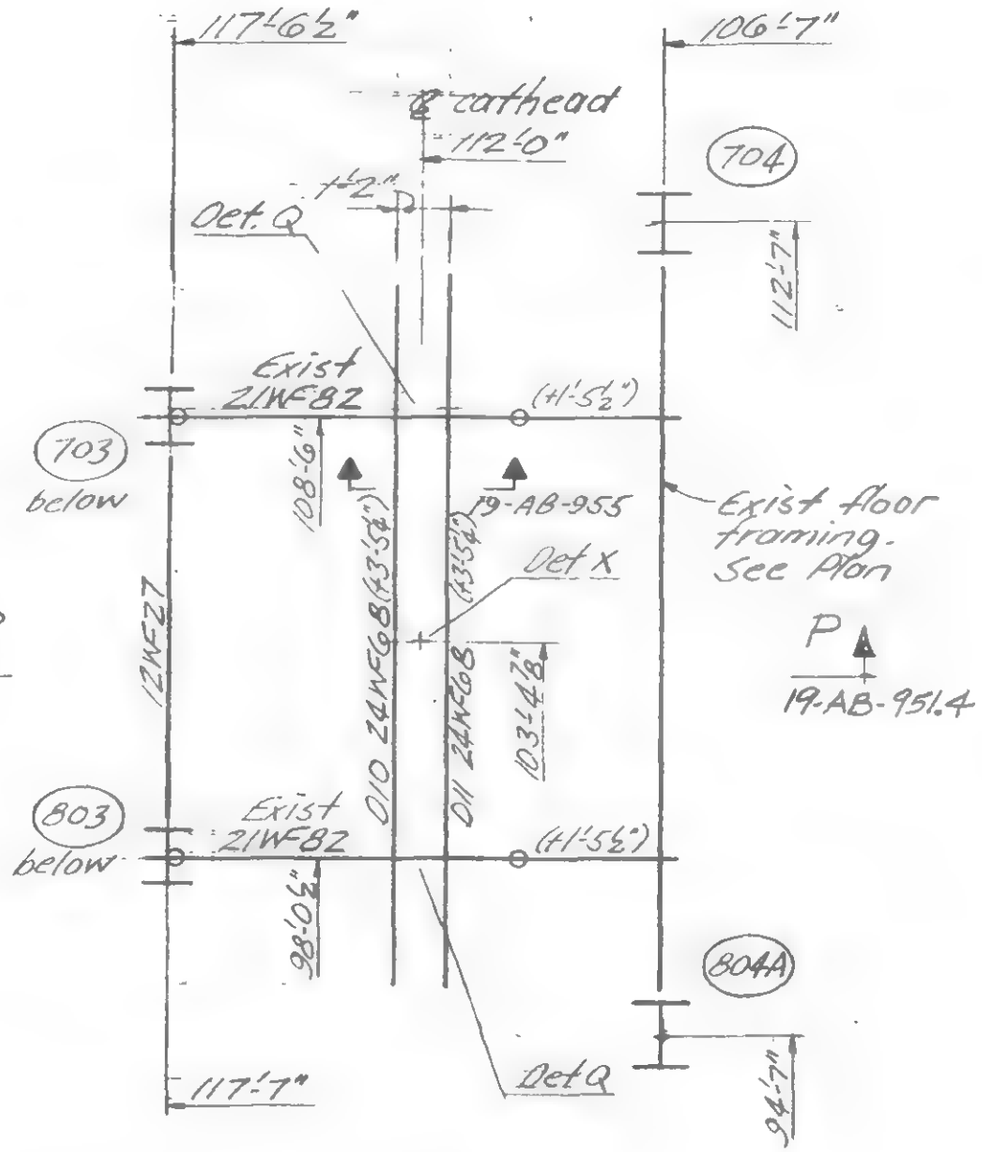


Framing Plan at Floor 110

See Dwg. No. 19-AB-951.1 for notes.

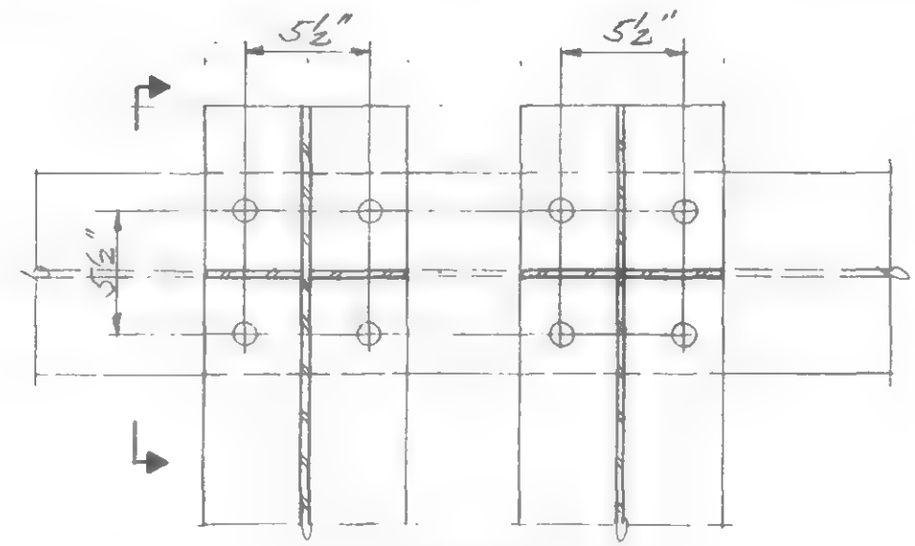


Plan

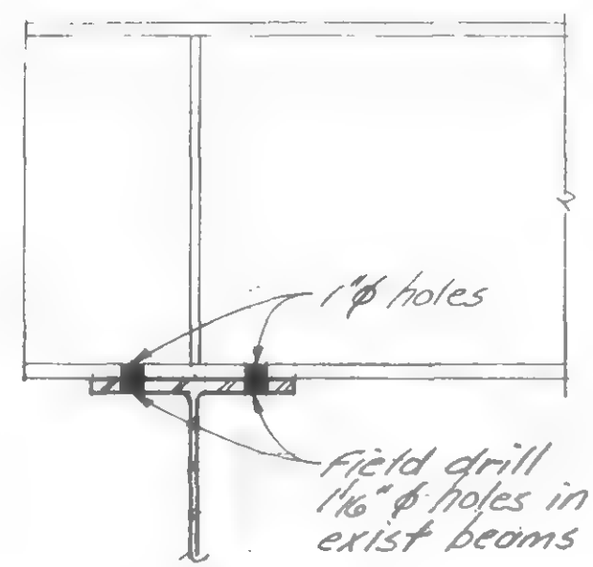


Section

Detail Q

LICENSED PROFESSIONAL ENGINEER — LESLIE E. ROBERTSON — No 34960 — UNIVERSITY OF THE STATE OF NEW YORK

DESIGNED

DRAWN J. Adams

REVIEWED

19-AB-951.3

SKILLING, HELLE, CHRISTIANSEN, ROBERTSON — Structural & Civil Engineers

PROJECT: THE WORLD TRADE CENTER

TITLE: CONCRETE HOIST CATHEAD SUPPORT

DATE: 12/7/70

REVISIONS

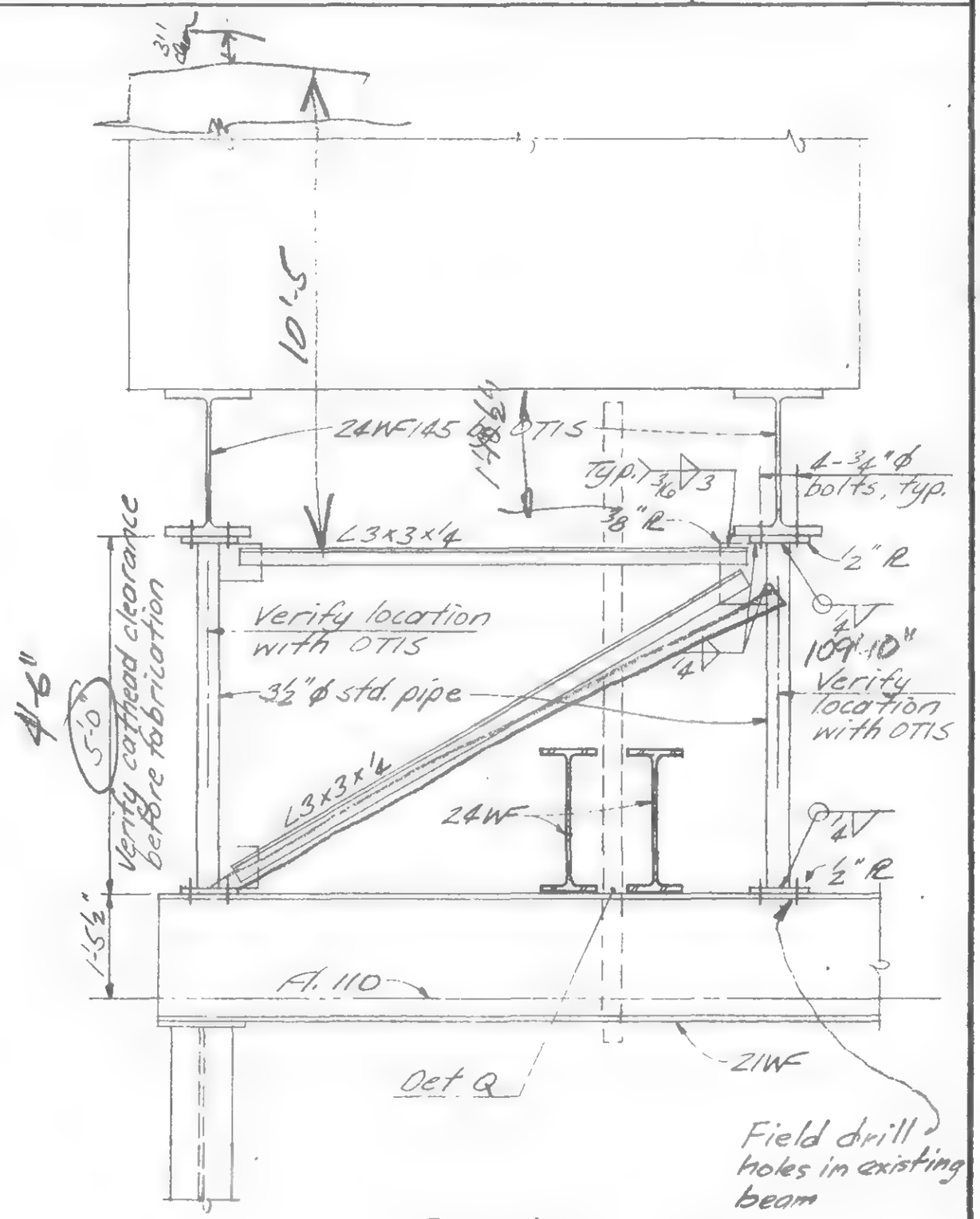


Section P-P

NED

DRAWN P Tekin

REVIEWED

19-AB-951.4

SKILLING, HELLE, CHRISTIANSEN, ROBERTSON — Structural & Civil Engineers

PROJECT: THE WORLD TRADE CENTER | TITLE: CONCRETE HOIST CATHEAD SUPPORT | DATE: 12/7/70

REVISIONS

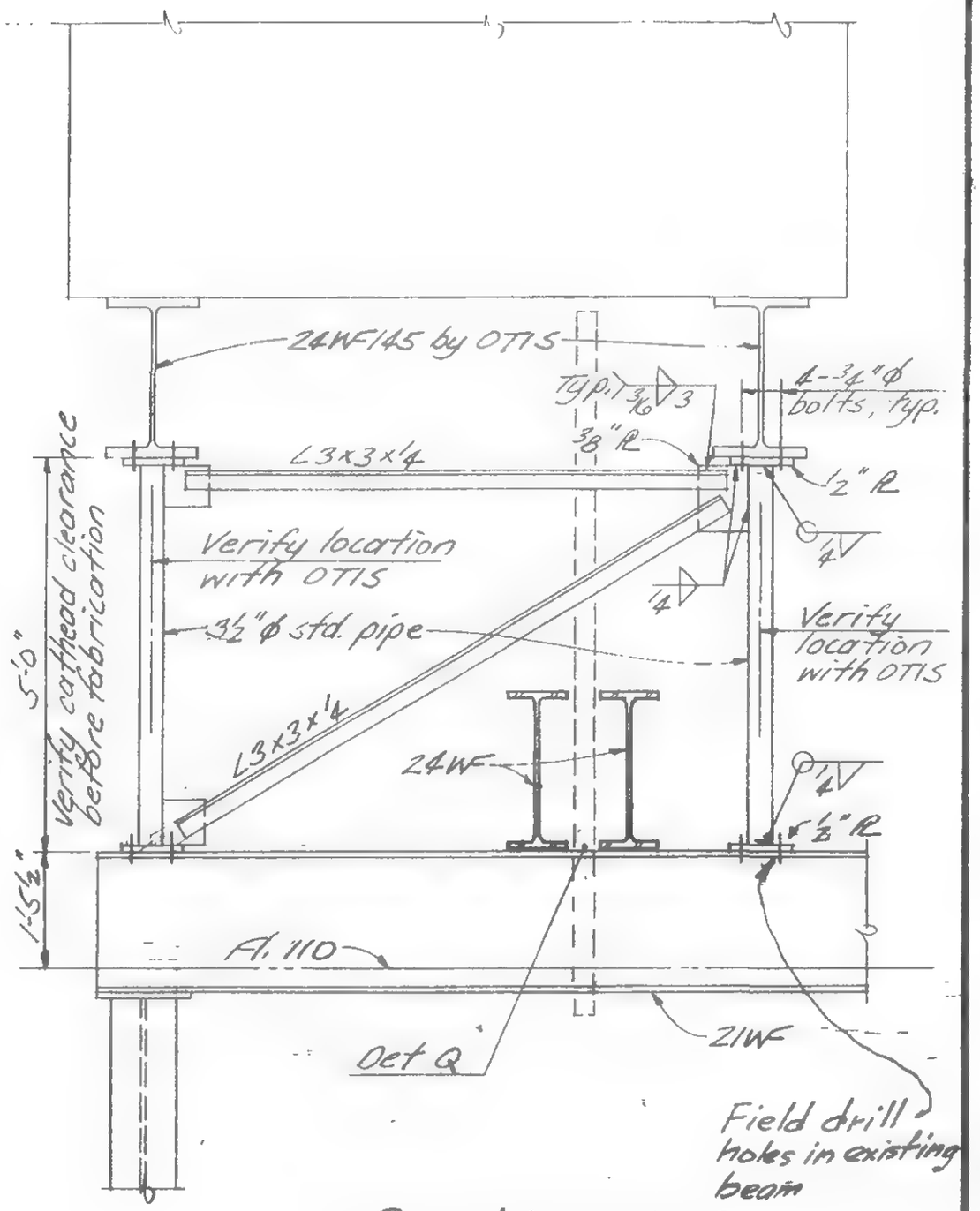


Section P-P

LICENSED PROFESSIONAL ENGINEER — LESLIE E. ROBERTSON — No. 34360 — UNIVERSITY OF THE STATE OF NEW YORK

DESIGNED.

DRAWN P. Otchi

CHECKED

19-AB-951.4

SKILLING, HELLE, CHRISTIANSEN, ROBERTSON — Structural & Civil Engineers

PROJECT: THE WORLD TRADE CENTER | TITLE: CONCRETE HOIST CATHEAD SUPPORTS | DATE: 5-12-69

REVISIONS.
8-11-69
12-7-70

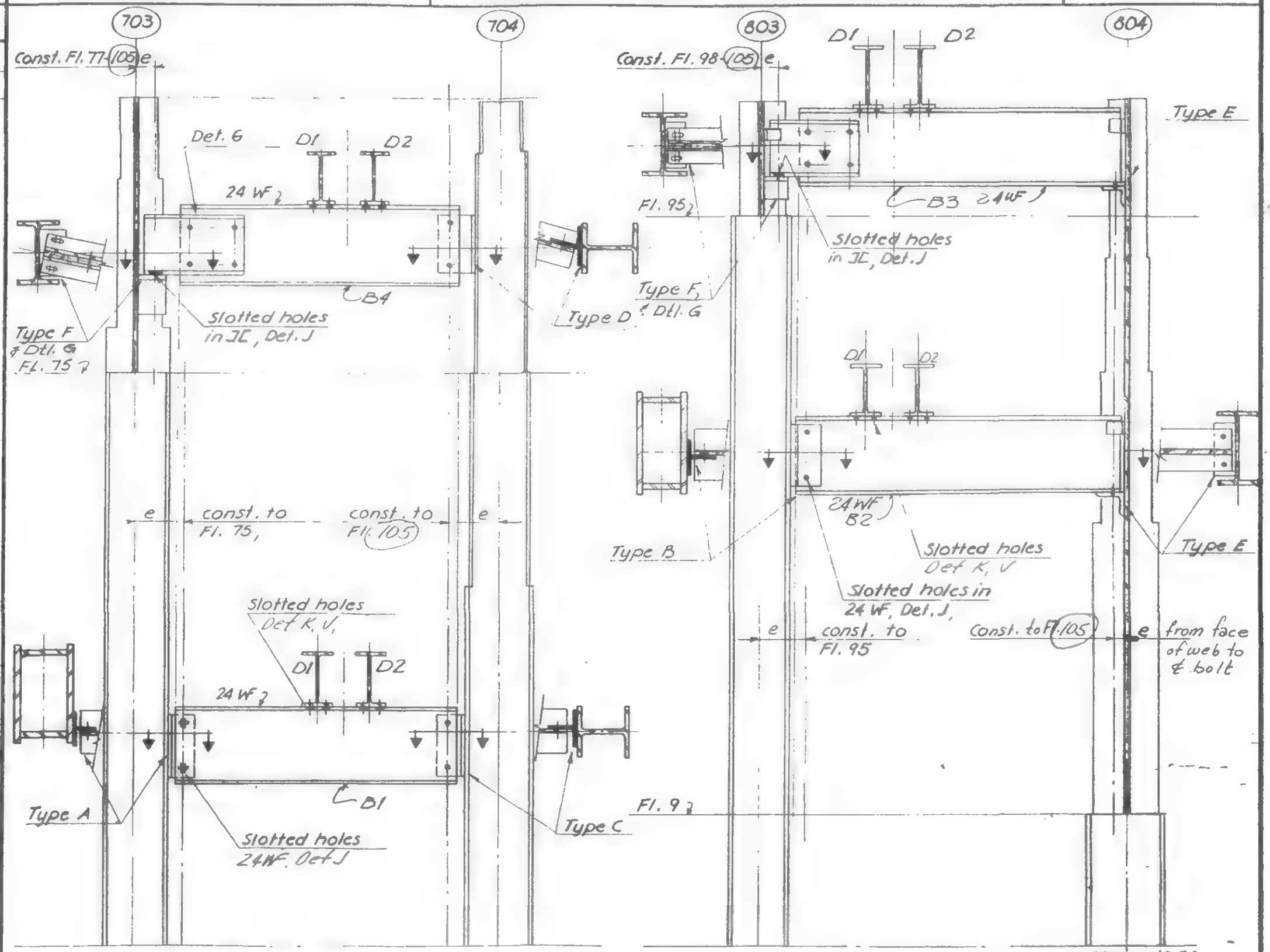


Note. For conn. dtls, see Dwg 19-AB-953 & 954
For conn. locations, see Dwg 19-AB-954

SCHEMATIC ELEVATIONS
CATHEAD SUPPORT SYSTEM

19-AB-952

LICENSED PROFESSIONAL ENGINEER
LESLIE E. ROBERTSON
No. 34360
UNIVERSITY OF THE STATE OF NEW YORK

DESIGNED
DRAWN
REVIEWED

SKILLING, HELLE, CHRISTIANSEN, ROBERTSON — Structural & Civil Engineers

PROJECT: THE WORLD TRADE CENTER | TITLE: CONCRETE HOIST CATHEAD SUPPORTS - DETAILS | DATE: 5-12-69

REVISIONS
8-11-69
12-7-70

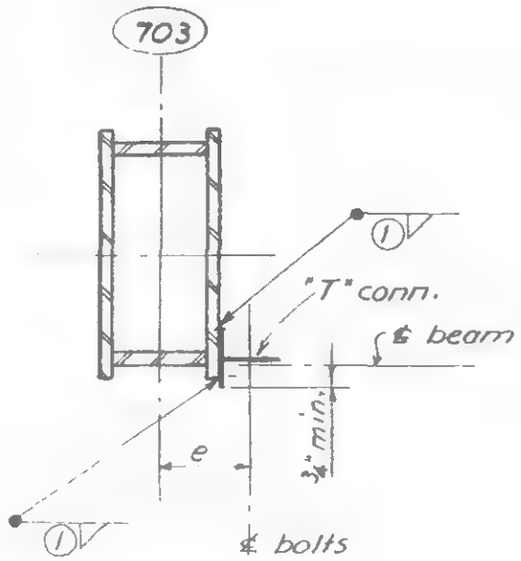


TYPE A

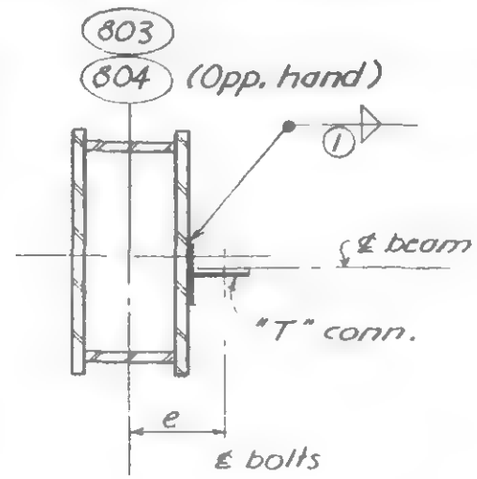


TYPE B

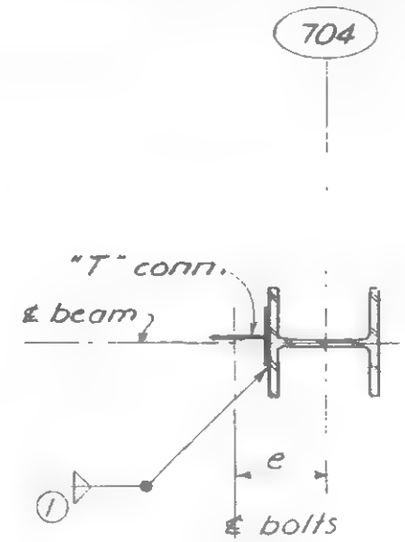


TYPE C

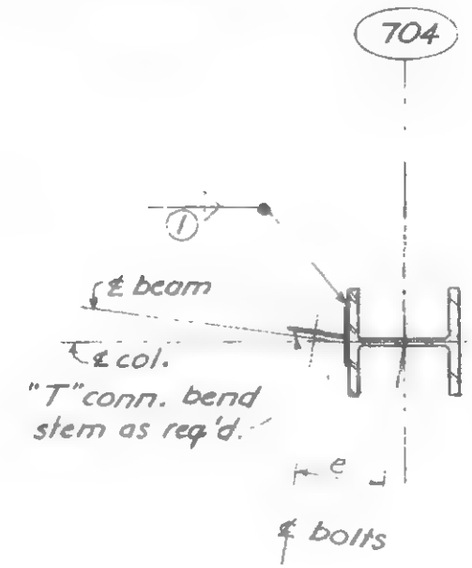


TYPE D

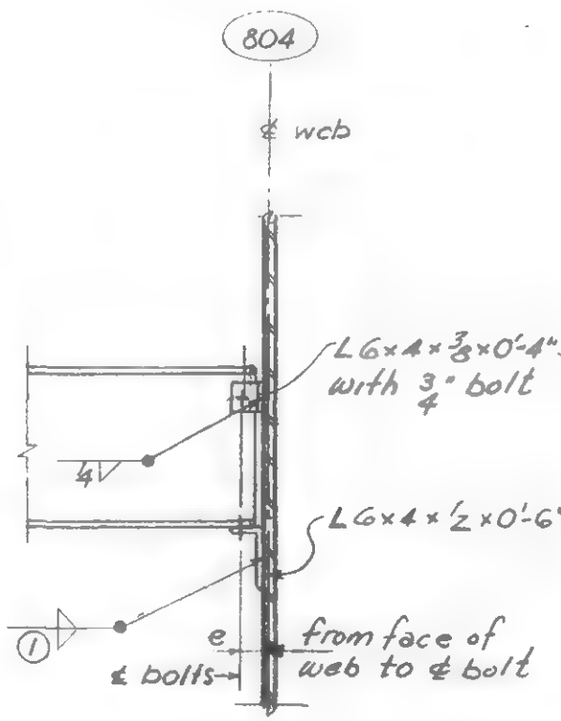


TYPE E

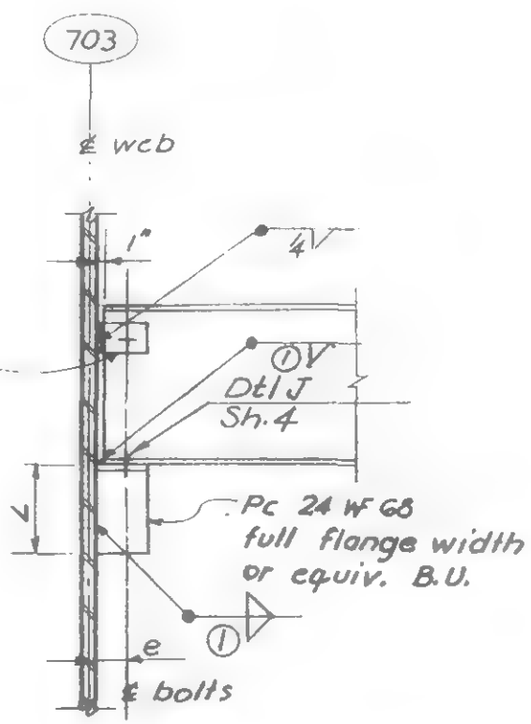


TYPE F

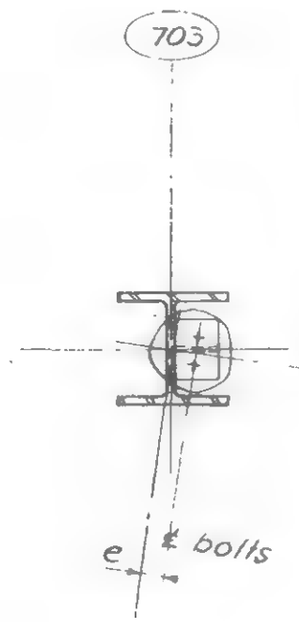


PLAN - TYPE F
AT COL 703

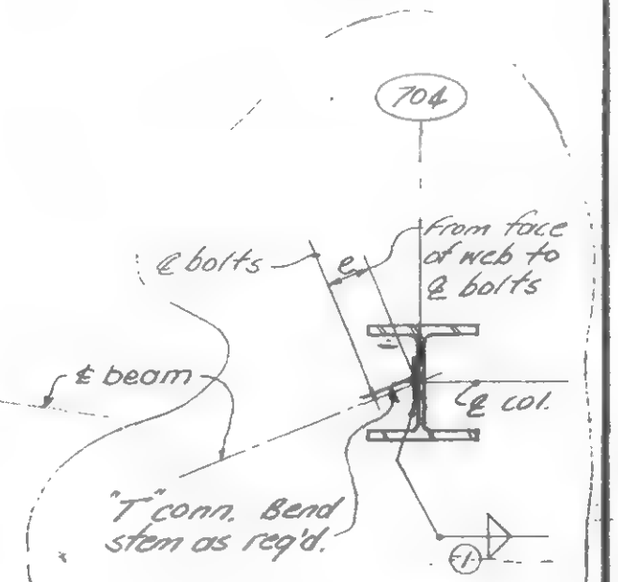


TYPE J
At Col. 704 as shown
Col. 703, 803, 804A similar

Notes: 1. For typical "T" connection see Dwg. 19-AB-954.
2. For details of seated connections see Dwg. 19-AB-954.

LICENSED PROFESSIONAL ENGINEER — LESLIE E. ROBERTSON — No. 34360 — UNIVERSITY OF THE STATE OF NEW YORK

DESIGNED
DRAWN F. Smith
REVIEWED

19-AB-953

SKILLING, HELLE, CHRISTIANSEN, ROBERTSON — Structural & Civil Engineers

PROJECT: THE WORLD TRADE CENTER | TITLE: CONCRETE HOIST CATHEAD SUPPORTS - DETAILS | DATE: 5-12-69

REVISIONS
8-11-69
12-7-70

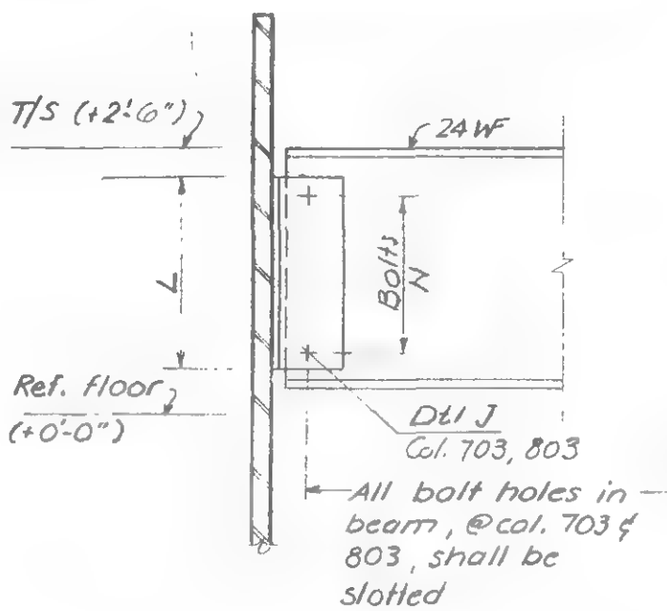


Typical Section @ Columns
Type A, B, C, D.

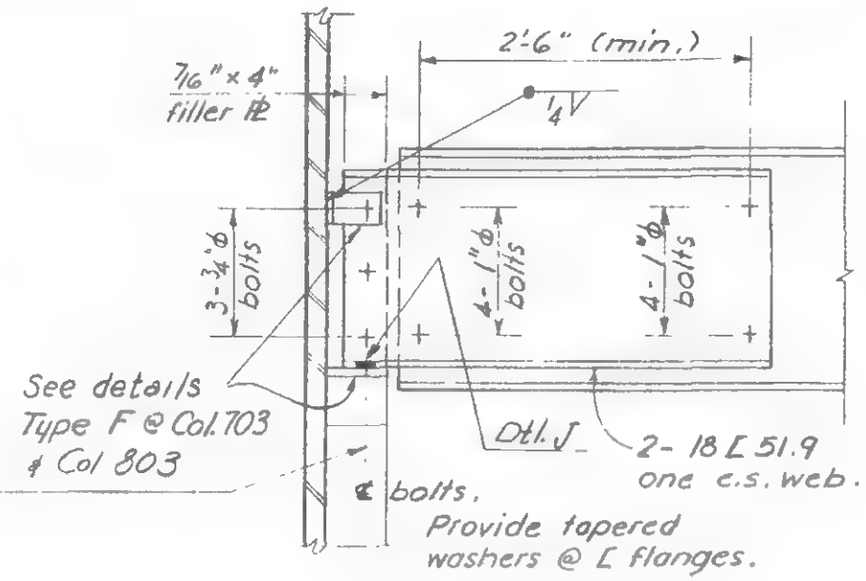


Detail G
Typical Support Beam Extension
Col. 703, Above Floor 75, Below Floor 105
Col. 803, Above Floor 95, Below Floor 105

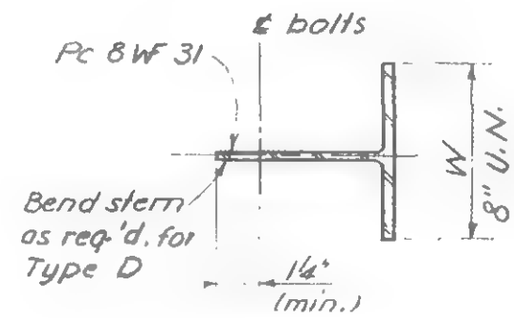


Detail H
Typical 'T' Connection.

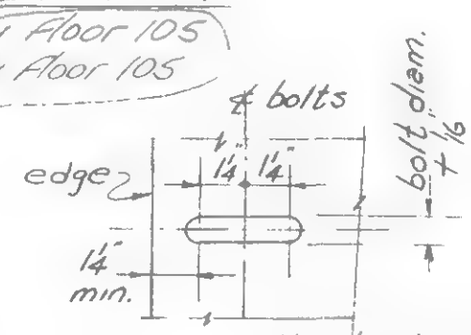


Use hardened washer against slotted face, 3/8" thick.

Detail J - Slotted Holes in Beams @ Columns 703 & 803

COLUMN CONNECTION SCHEDULE

| LOCATION * | | | TYPE | e (IN) | BOLTS | | CONNECTION | | REMARKS |
|---|---|---|---|---|---|---|---|---|---|
| COL. | FLOOR TOWER A | FLOOR TOWER B | | | SIZE | N | L | WELD (1) | |
| 703 | 20-74 | 11-74 | A | 12 7/8" | 1"ϕ | 6 | 1'-5 1/2" | 5/16 | |
| | 76-105 | 76-105 | F | 4'2" | 3/4"ϕ | 2 | 0'-10" | 5/16 | Use detail G @ 703 |
| 704 | 20-74 | 11-74 | C | 11 3/4" | 1"ϕ | 6 | 1'-5 1/2" | 5/16 | |
| | 76-105 | 76-105 | D | 11 3/4" | 1"ϕ | 6 | 1'-5 1/2" | 5/16 | W=6" @ Dtl H, Above F 95. |
| 803 | 20-94 | 11-94 | B | 12 3/8" | 1"ϕ | 6 | 0'-11 1/2" | 5/16 | |
| | 97-105 | 97-105 | F | 3'2" | 3/4"ϕ | 2 | 0'-10" | 5/16 | Use detail G @ 803 |
| 804 | — | - | | | | | | | |
| | 20-105 | 11-105 | E | 1 11/16" | 3/4"ϕ | 2 | — | 5/16 | |
| | | | | | | | | | |

* Twr A, Connections @ Floors: 20, 23, 26, 29, 32, 35 38, 40, 42, 44, 47, 50, 53, 56, 59, 62, 65, 68, 71, 74, 76, 79, 82, 85, 88, 91, 94, 97, 100, 103, 105

* Twr B, Connections @ Floors: 11, 14, 17, 20, 23, 26, 29, 32, 35, 38, 40, 42, 44, 47, 50, 53, 56, 59, 62, 65, 68, 71, 74, 76, 79, 82, 85, 88, 91, 94, 97, 100, 103

LICENSED PROFESSIONAL ENGINEER — LESLIE E. ROBERTSON — No. 34360 — UNIVERSITY OF THE STATE OF NEW YORK

DESIGNED
F. Smith
REVIEWED

19-AB-954

SKILLING, HELLE, CHRISTIANSEN, ROBERTSON — Structural & Civil Engineers

PROJECT: THE WORLD TRADE CENTER | TITLE: CONCRETE HOIST CATHEAD SUPPORT | DATE: 5-12-69

REVISIONS
5-21-69
8-11-69

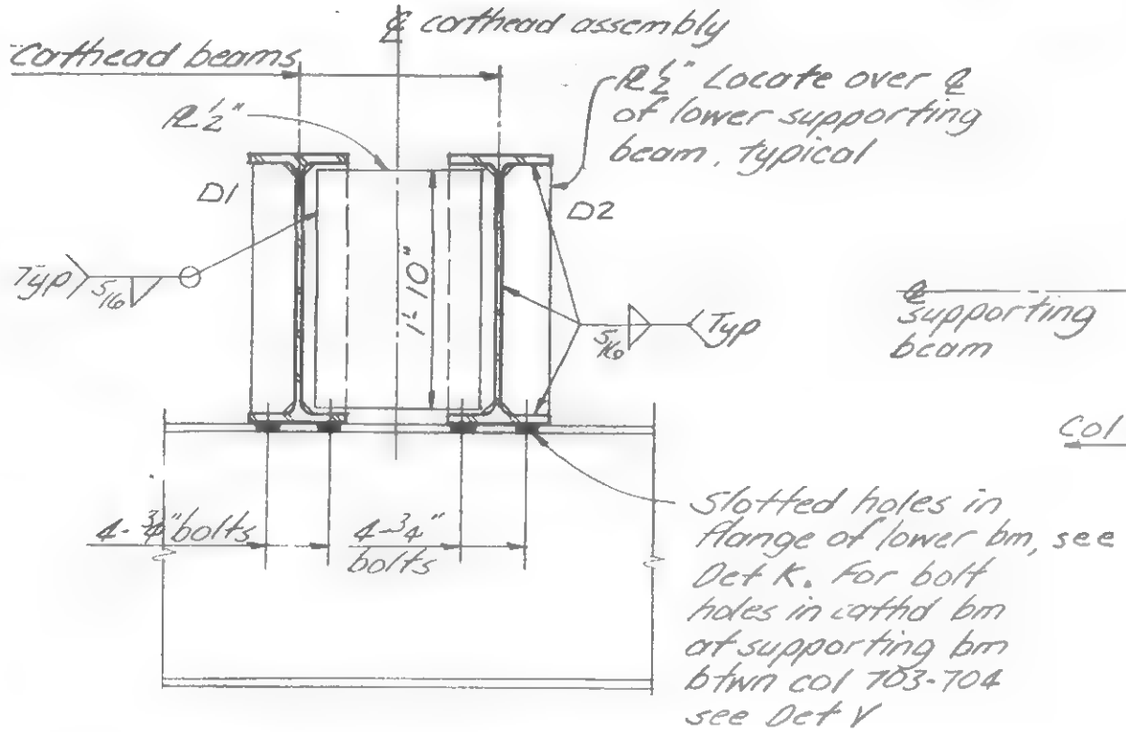


Section a-a.

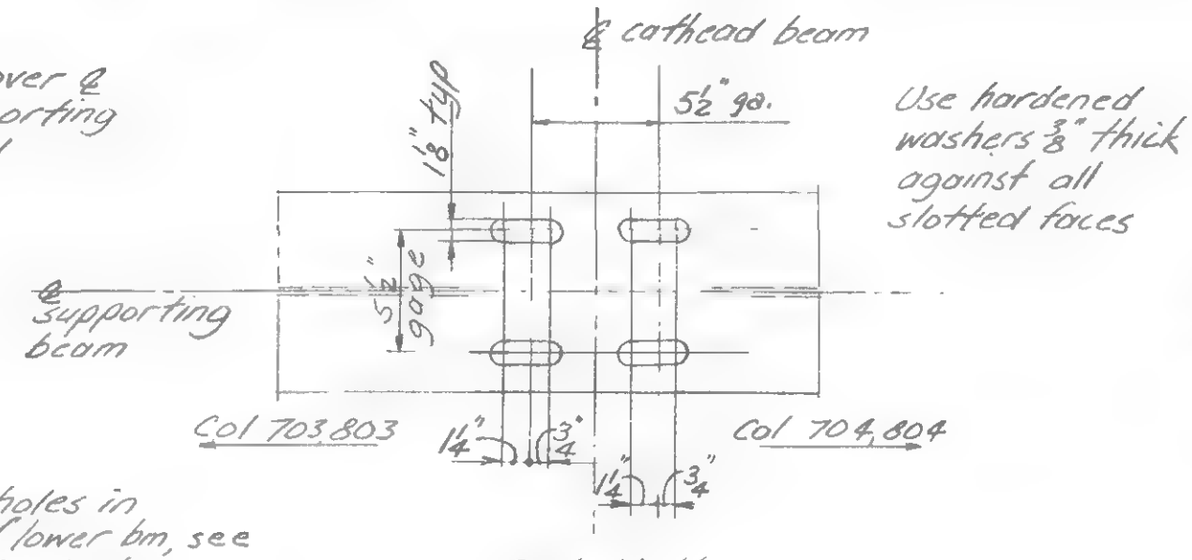


Detail K

SLOTTED HOLES IN SUPPORTING BEAMS AT CATHEAD CONNECTIONS

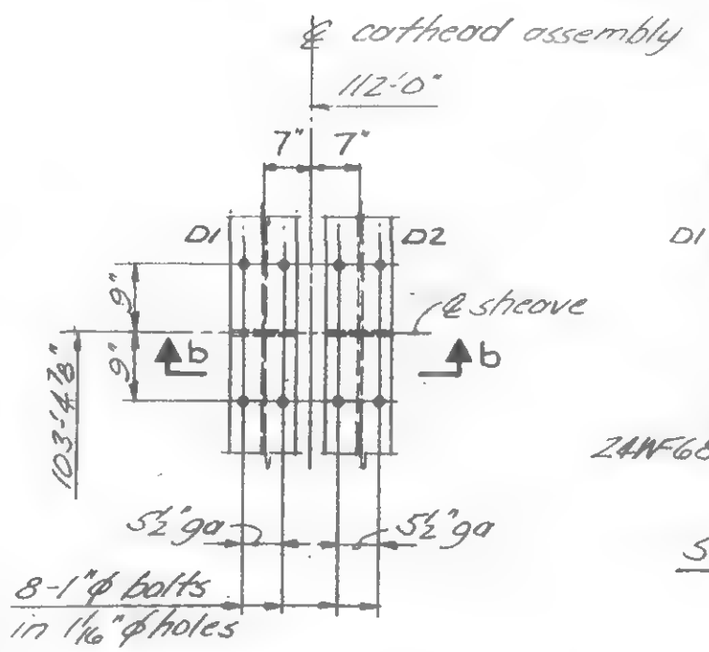


DETAIL X

SHEAVE CONN TO CATHEAD BM

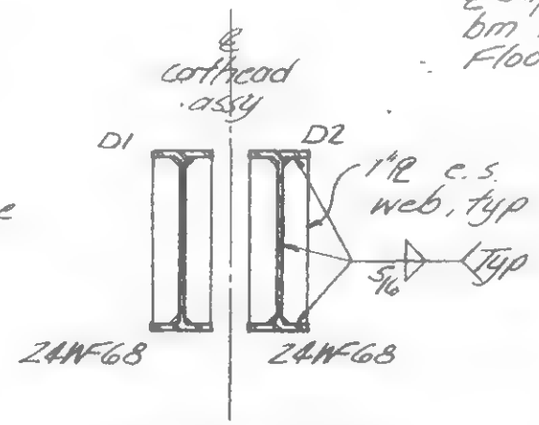


Section b-b

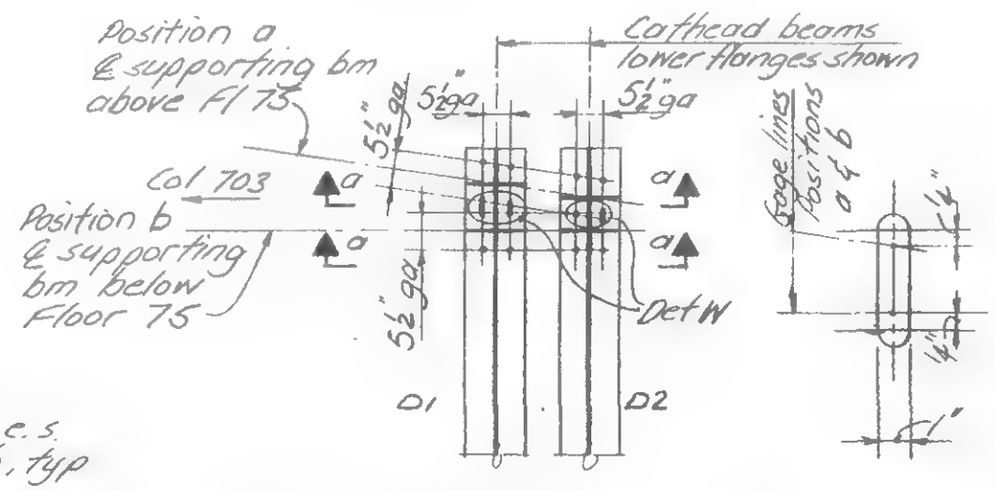


All bolt holes 1" ϕ except Det W.

DETAIL V

CONNECTION HOLES IN CATHEAD BEAMS AT SUPPORT BEAM BETWEEN COL 703 & 704

Use hardened washers 3/8" thick against slotted face

DETAIL W

Ref dwg (Alons) 19AB951

LICENSED PROFESSIONAL ENGINEER — LESLIE E. ROBERTSON — No. 34360 — UNIVERSITY OF THE STATE OF NEW YORK

DESIGNED
DRAWN
REVIEWED

19AB955

SKILLING, HELLE, CHRISTIANSEN, ROBERTSON — Structural & Civil Engineers

PROJECT: THE WORLD TRADE CENTER

TITLE: CONCRETE HOIST LEAD SHEAVE SUPPORTS

DATE: 5-12-69

REVISIONS
5-21-69
8-11-69

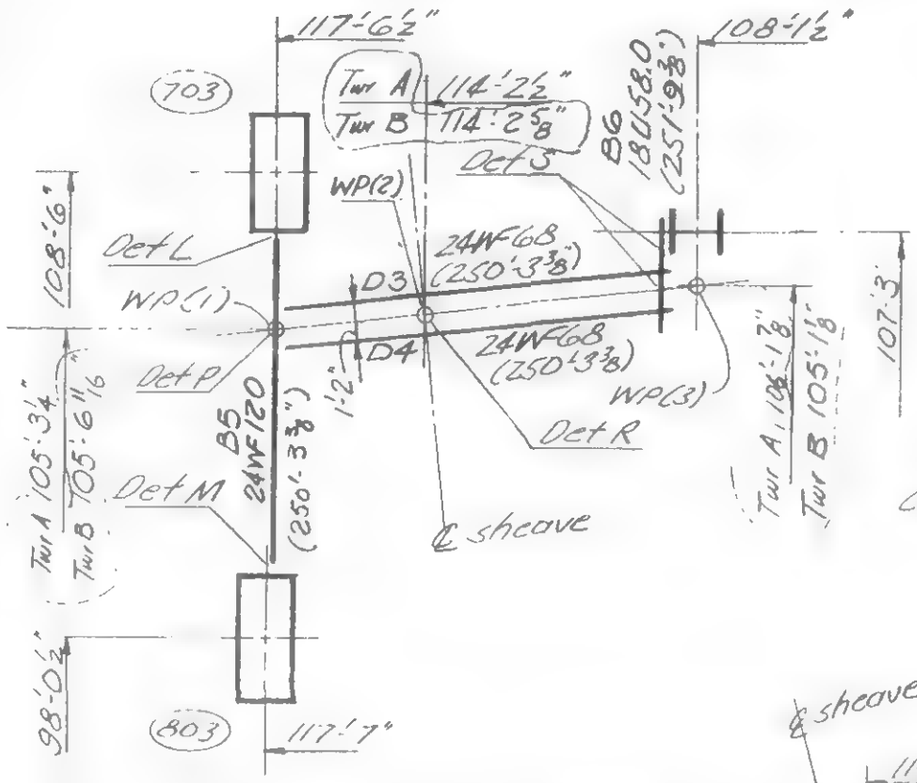


PLAN-LEAD SHEAVE FRAMING

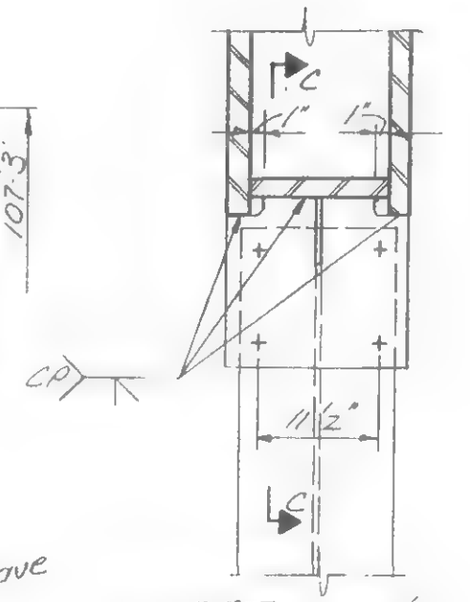


DETAIL L&M

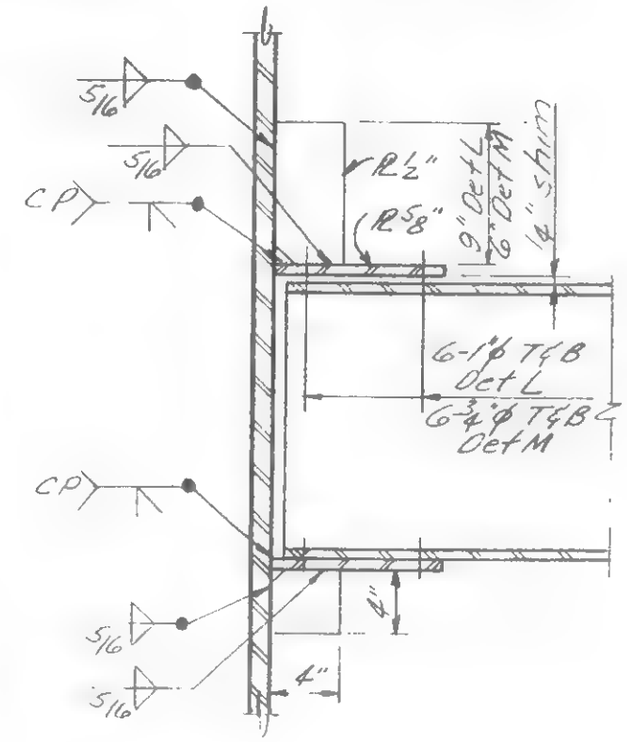


Section C-C

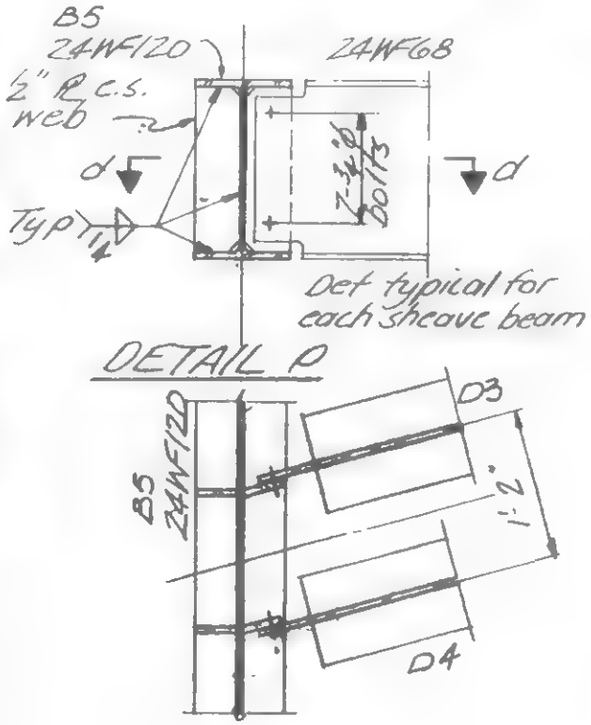


DETAIL P

Section d-d

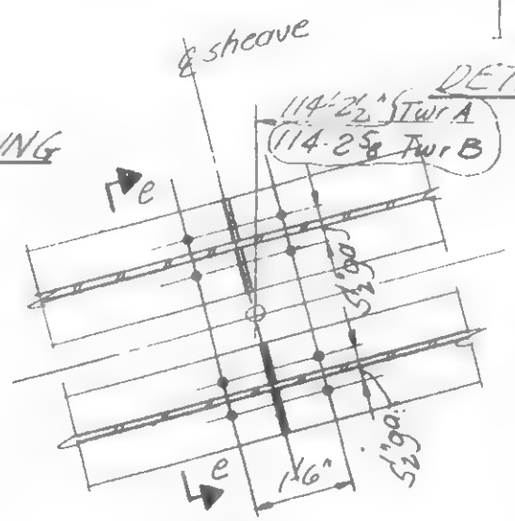


DETAIL R

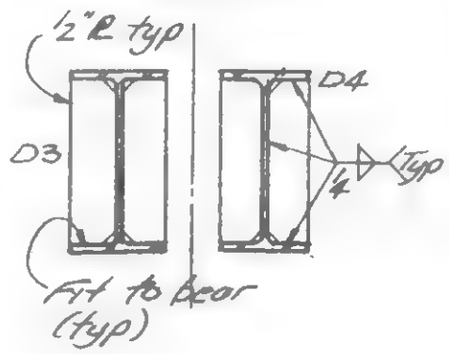


Section e-e

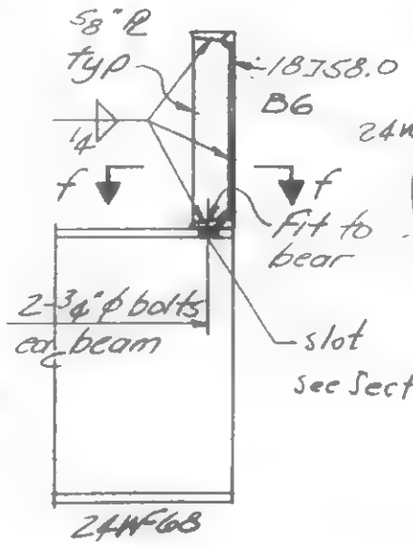


DETAIL S

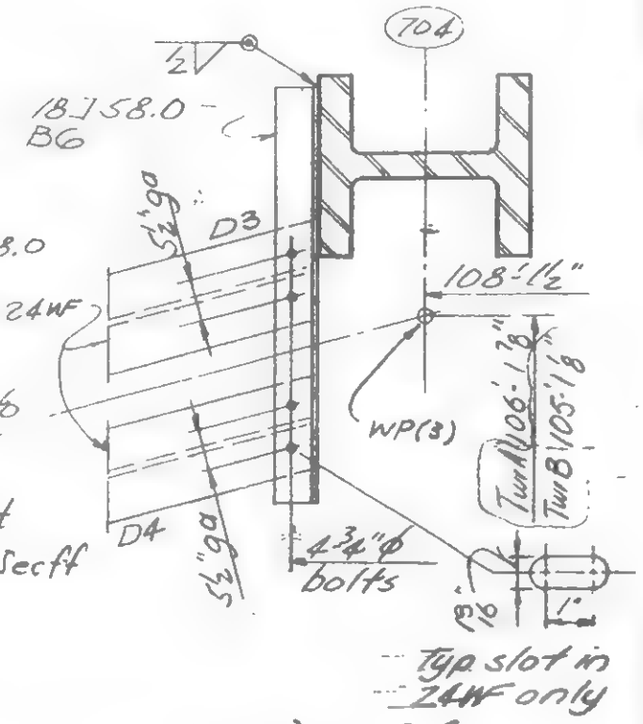


Section f-f

LICENSED PROFESSIONAL ENGINEER — LESLIE E. ROBERTSON — No. 34360 — UNIVERSITY OF THE STATE OF NEW YORK

DESIGNED

REVIEWED

19-AB-956

SKILLING, HELLE, CHRISTIANSEN, ROBERTSON — Structural & Civil Engineers

PROJECT: THE WORLD TRADE CENTER | TITLE: EXTERIOR WALL-BEAM SEAT REPAIR - FL. 7 & 9 | DATE: 8/20/69

REVISIONS

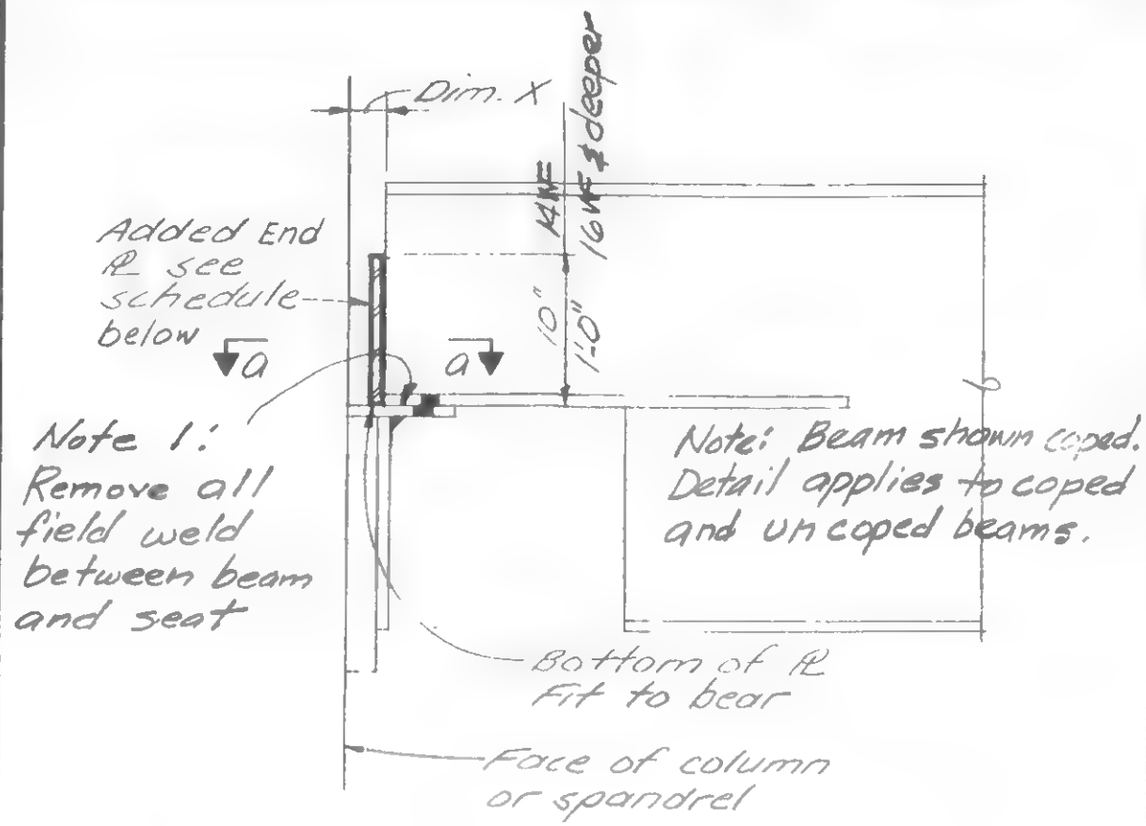


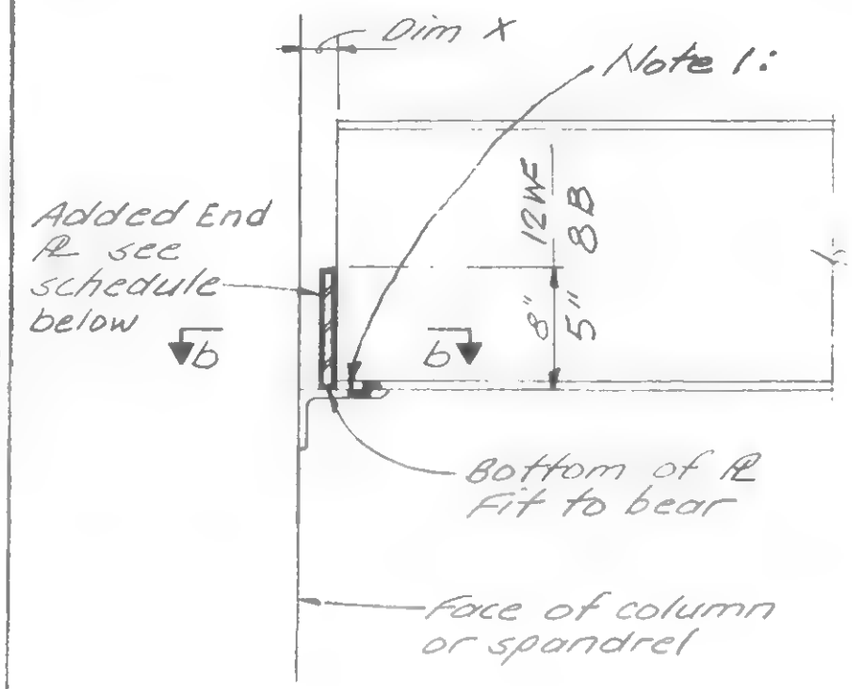


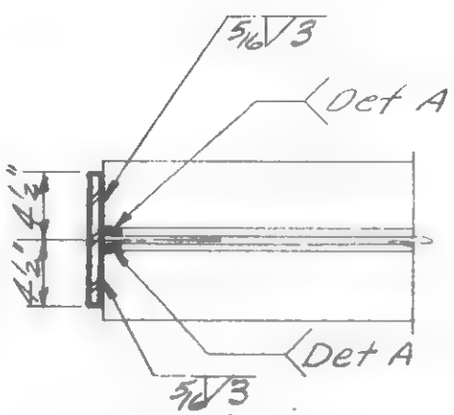


Section a-a
At beams with web doublers

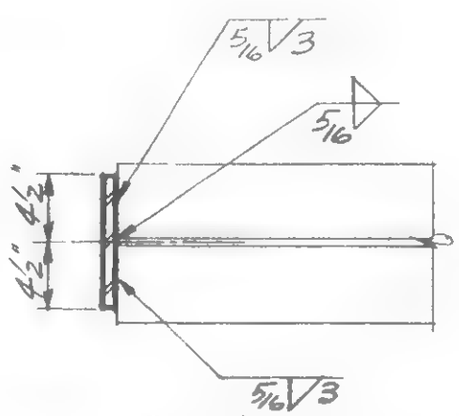


Section a-a
At beams without web doublers

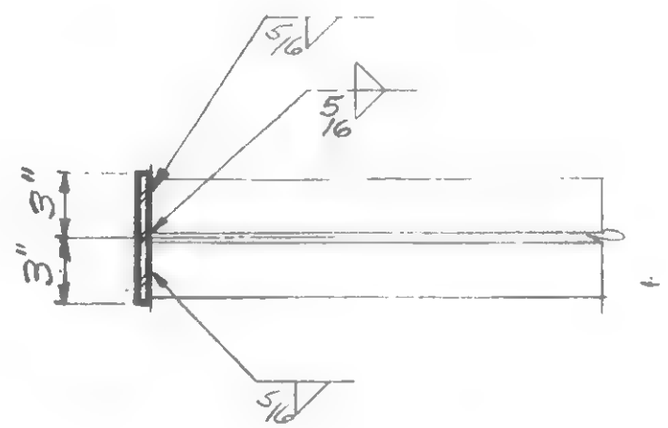


| Floor 7 Dim X | Floor 9 Dim X | Thickness End PL |
|---|---|---|
| To 1 9/16" | To 1 1/16" | None |
| 1 5/8" to 2 1/2" | 1 1/8" to 2" | 1/2" |
| 2 9/16" to 2 3/4" | 2 1/16" to 2 1/4" | 3/4" |
| 2 13/16" to 3 | 2 5/16" to 2 1/2" | 1" |

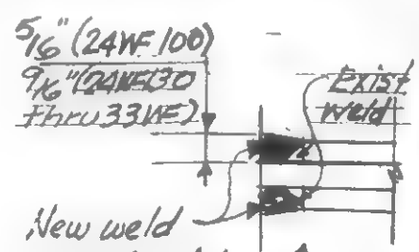


Detail A

| Floor 7 & 9 Dim X | Thickness End PL |
|---|---|
| To 1 1/16" | None |
| 1 1/8" to 1 1/2" | 1/2" |
| 1 9/16 to 1 3/4" | 3/4" |
| 1 13/16" to 2 | 1" |
| 2 1/16" to 2 1/4" | 1 1/4" |
| 2 5/16" to 2 1/2" | 1 1/2" |

DESIGNED: H. Root
DRAWN: J. Adams
REVIEWED:

Note: Where repair is required, it is likely that damper conn. will not mate. See 19-AB-958 for repair.

19-AB-957

SKILLING, HELLE, CHRISTIANSEN, ROBERTSON — Structural & Civil Engineers

PROJECT: THE WORLD TRADE CENTER | TITLE: EXTERIOR WALL-DAMPER CONN. REPAIR-FL 7&9 | DATE: 8/20/69

REVISIONS

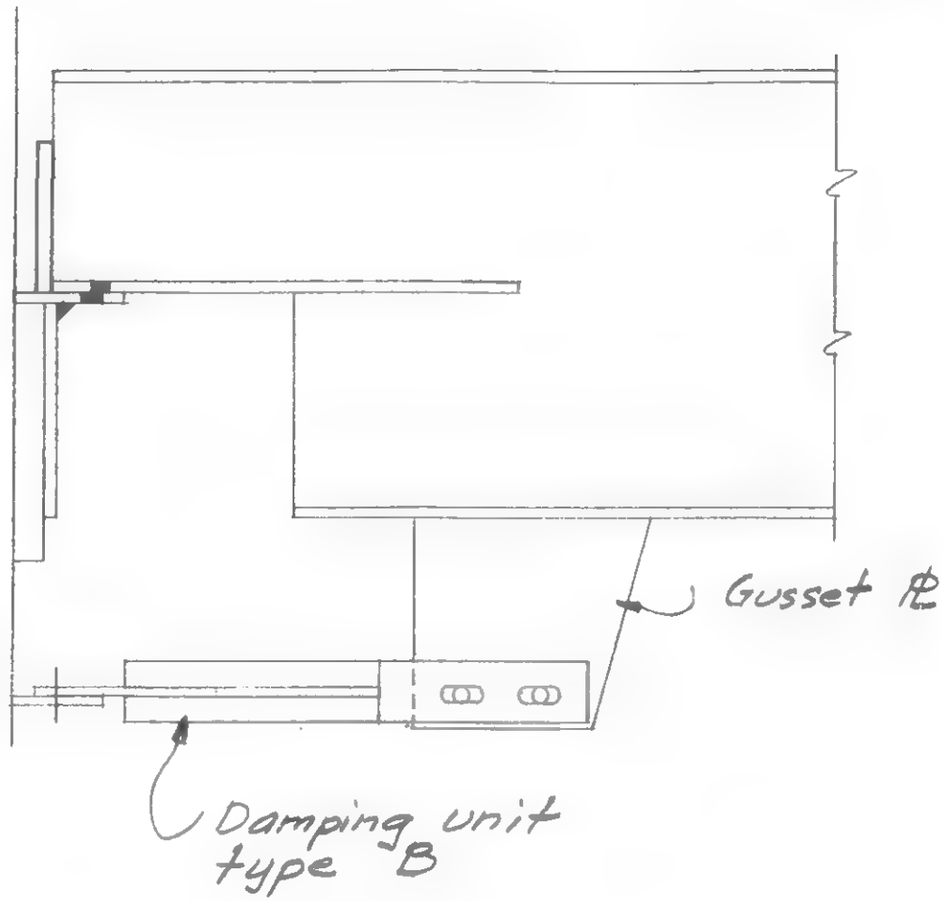


NOTES:
1. Bolt holes may be reamed to accomodate mis-matched holes providing that edge distances are maintained as shown in Detail 1 & 2.
2. Were edge distances cannot be maintained Contractor may rectify the deficiency by plug welding and by re-reaming.

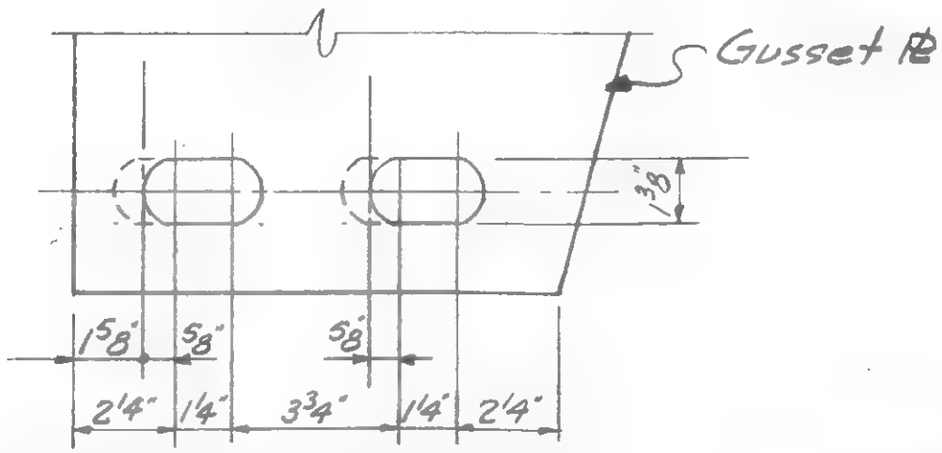


Max. reaming of slots Detail 1

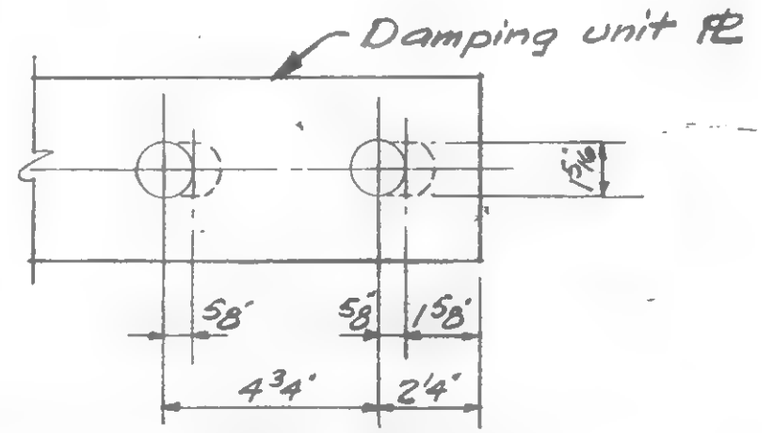


Max. reaming of holes Detail 2
Provide thickened washers per specs.

R

DESIGNED: H. Root
DRAWN: A. FRANQUI
REVIEWED:

19-AB-958

SKILLING, HELLE, CHRISTIANSEN, ROBERTSON — Structural & Civil Engineers

PROJECT: THE WORLD TRADE CENTER

TITLE: EXTERIOR WALL - TRUSS SEAT REPAIR

DATE: 9/2/69

REVISIONS

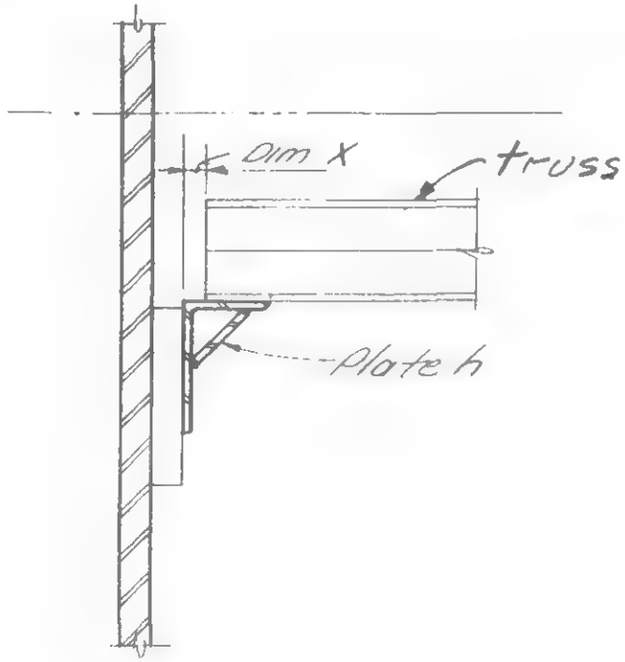


Detail A

| SCHEDULE OF REPAIR DETAIL | | | | | | |
|---|---|---|---|---|---|---|
| DIM. X | FLOORS | | | | | |
| | 10-40 | 44 | 45-48 | 49-74 | 78 | 79-106 |
| To 1/16" | None | None | None | None | None | None |
| 1/8" to 1/2" | A | A | A | A | B | A |
| 9/16" to 1" | A | B | A | A | B | A |
| 1 1/16" to 1 1/2" | A | B | A | B | B | B |

Note: Where repair is required, it is likely that damper connection will not mate. See 19-AB-960 for repair.

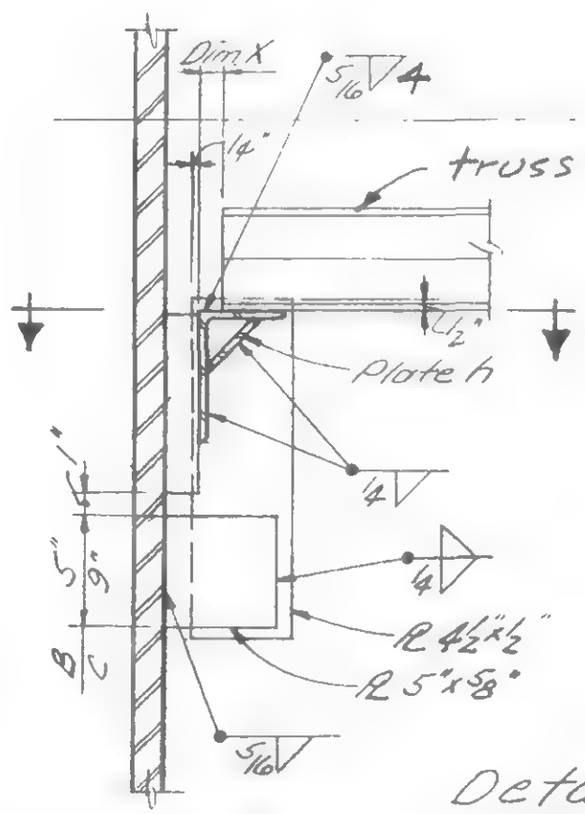


Section

Detail B

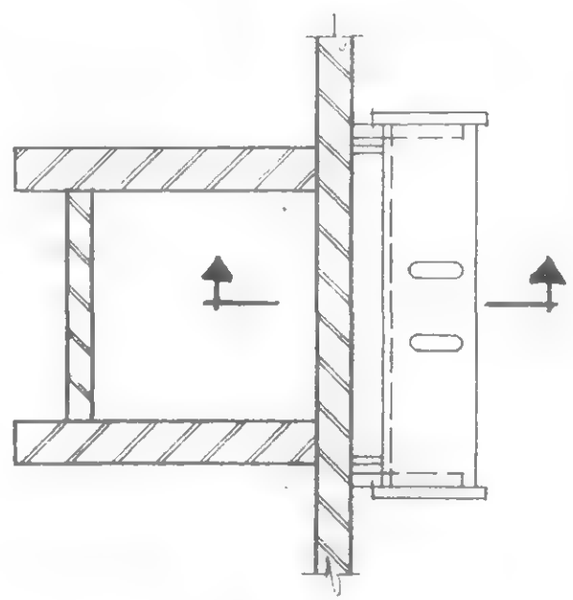

Plan

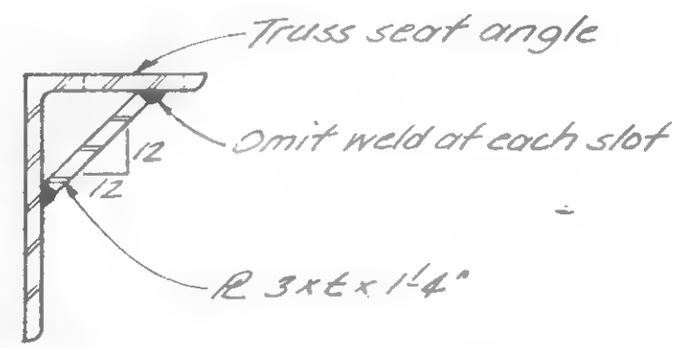


Floors 10-40, 45-74, 79-106
t = 5/16" typical, except
t = 3/8" @ Cols. 111, 149, 217, 243, 311, 349, 417 & 443

Floors 44 & 78:
t = 1/2" typical, except
t = 5/8" @ Cols. 111, 149, 311 & 349

Detail of Plate h

DESIGNED: H. Roet

DRAWN: J. Adams

REVIEWED: W. Brewer

19-AB-959

SKILLING, HELLE, CHRISTIANSEN, ROBERTSON — Structural & Civil Engineers

PROJECT: THE WORLD TRADE CENTER

TITLE: FLOOR 25 - TOWER A - STRUCTURAL REPAIR

DATE: 10/31/69

REVISIONS: 12/1/69

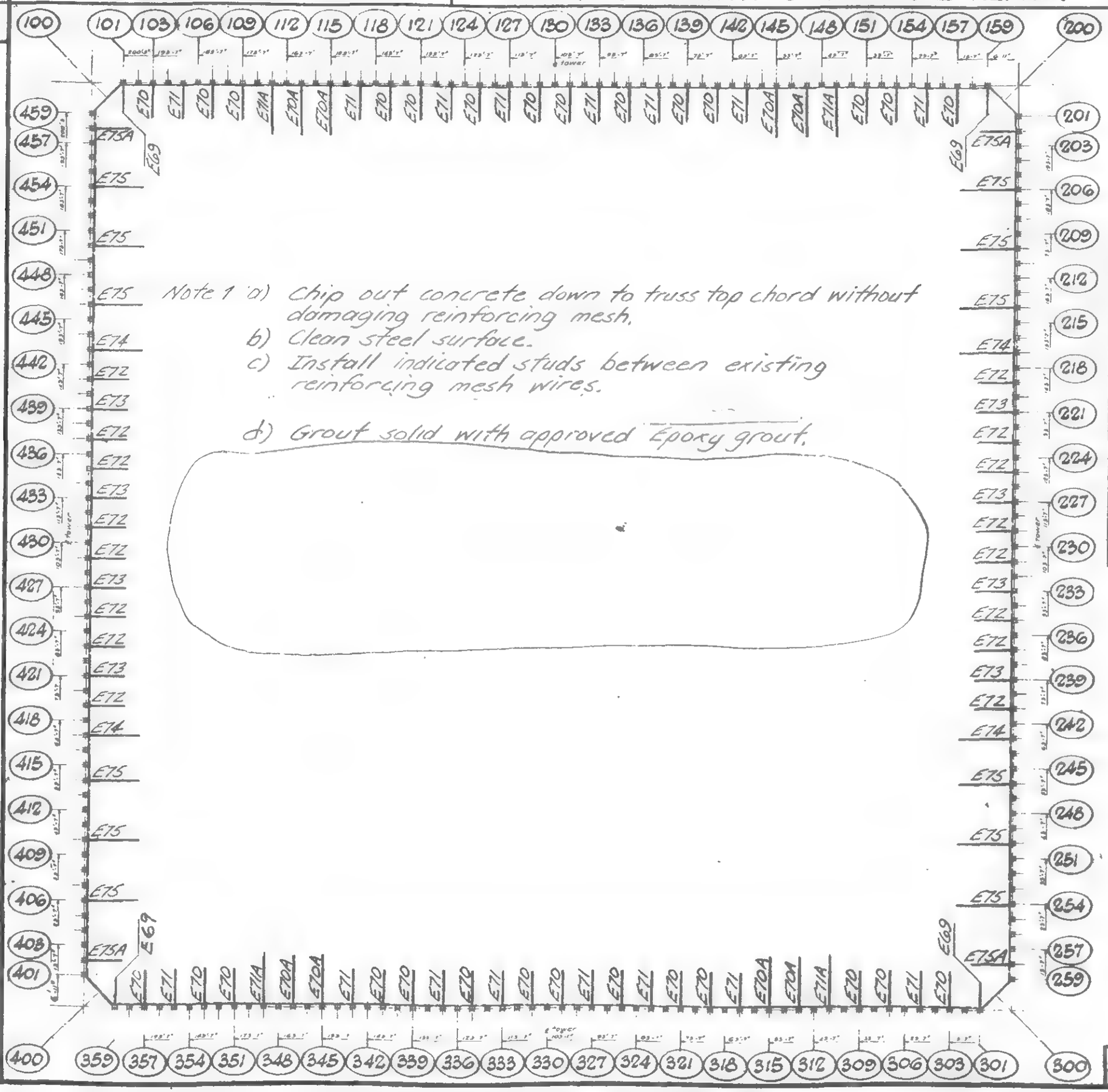


Note 1 a) Chip out concrete down to truss top chord without damaging reinforcing mesh.
b) Clean steel surface.
c) Install indicated studs between existing reinforcing mesh wires.
d) Grout solid with approved Epoxy grout.

| Det. Sch. | Det. Installed | Corrective Action |
|---|---|---|
| E69 | E60 | None |
| E70 | None | None |
| E70A | None | E70AR |
| E71 | None | None |
| E71A | None | E71AR |
| E72 | None | None |
| E73 | None | None |
| E74 | None | E74R |
| E75 | E68 | E75R |
| E75A | E68A | None |

DESIGNED

DRAWN: J Adams

REVIEWED: W. Brewer

19-A-961.1

SKILLING, HELLE, CHRISTIANSEN, ROBERTSON — Structural & Civil Engineers

PROJECT: THE WORLD TRADE CENTER

TITLE: FLOOR 25 - TOWER A - STUD REPAIR

DATE: 10/31/69

REVISIONS

12/1/69

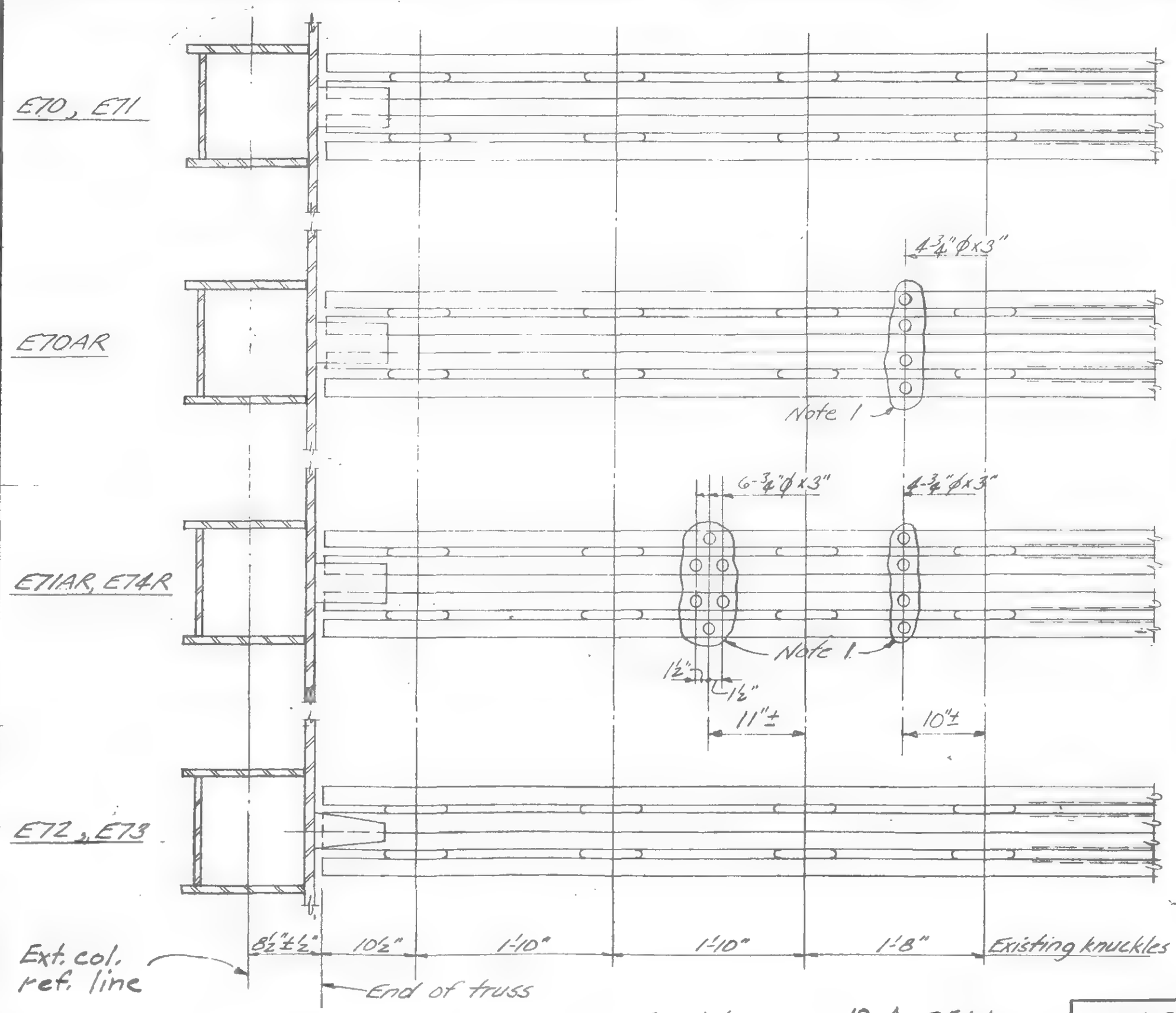


For Note 1, see 19-A-961.1

19-A-961.2

LICENSED PROFESSIONAL ENGINEER — LESLIE E. ROBERTSON — No. 34860 — UNIVERSITY OF THE STATE OF NEW YORK

DESIGNED

DRAWN J. Adams

REVIEWED W. Brewer

SKILLING, HELLE, CHRISTIANSEN, ROBERTSON — Structural & Civil Engineers

PROJECT: THE WORLD TRADE CENTER | TITLE: FLOOR 25 - TOWER A - STUD REPAIR | DATE: 10/31/69

REVISIONS

12/1/69

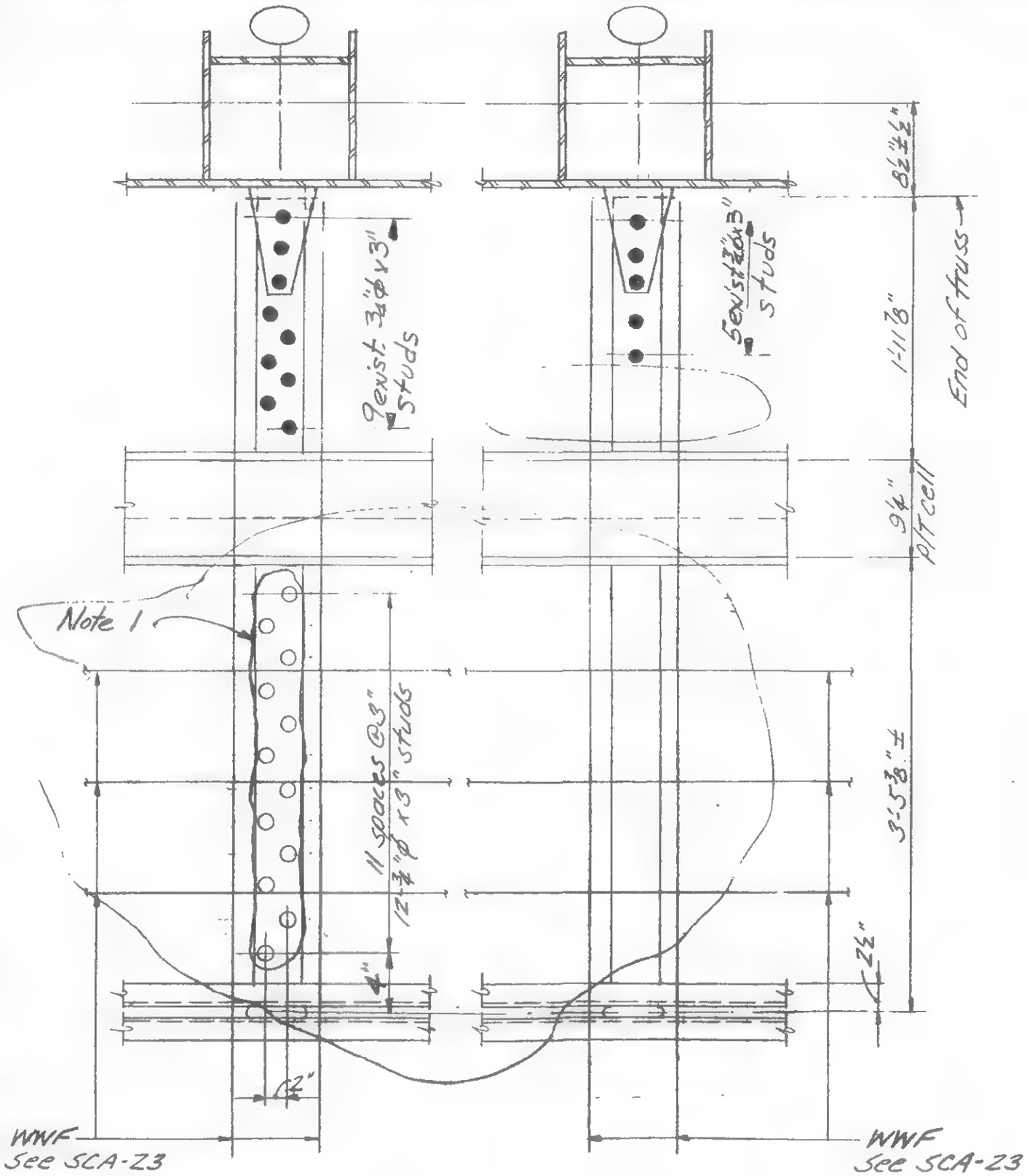


E75 R

E75A

For note 1, see 19-A-961.1

19-A-961.3

LICENSED PROFESSIONAL ENGINEER — LESLIE E. ROBERTSON — No. 34360 — UNIVERSITY OF THE STATE OF NEW YORK

DESIGNED

DRAWN J. Adams

REVIEWED W. Brewer

SKILLING, HELLE, CHRISTIANSEN, ROBERTSON — Structural & Civil Engineers

PROJECT: THE WORLD TRADE CENTER | TITLE: MODIFIED DECK SHELF ANGLE WELDING | DATE: 3-24-70

REVISIONS

7-20-70
7-27-70

Note: Detail 1A thru 1H indicate various extents of field weld Detail 1 for floors indicated in schedule.

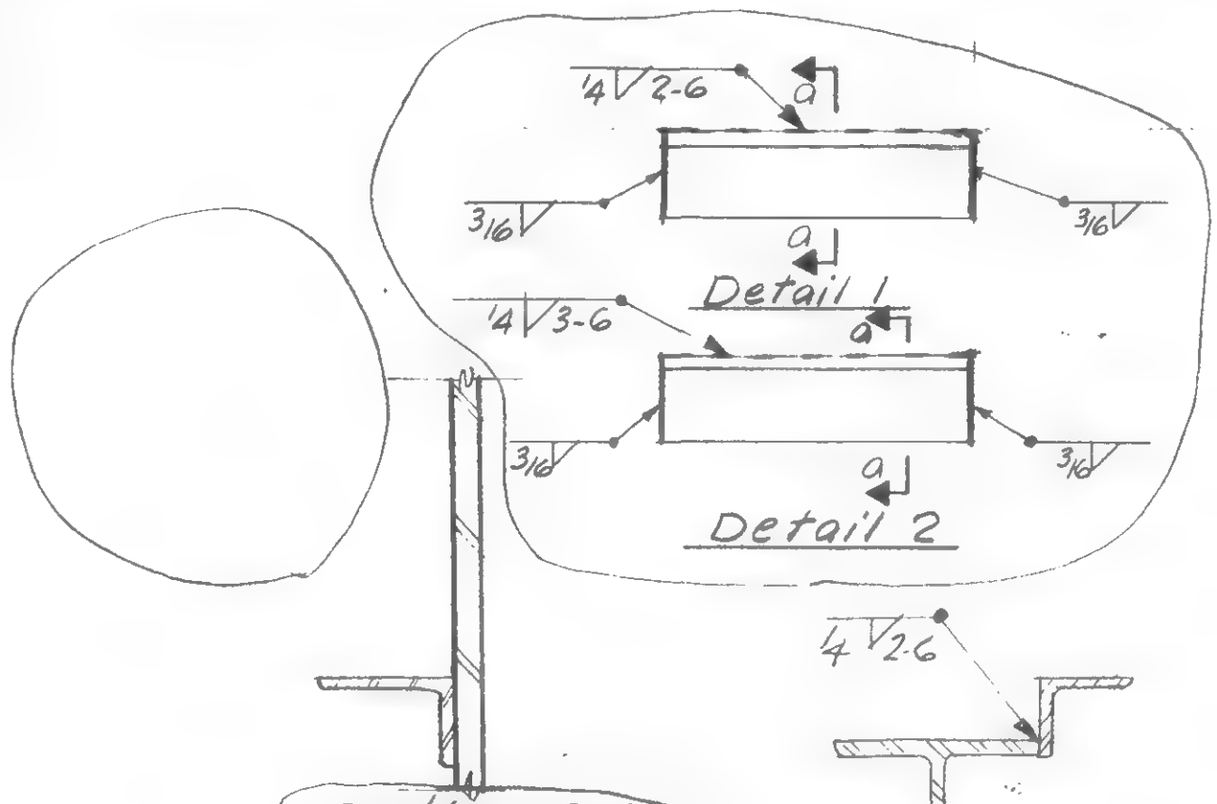


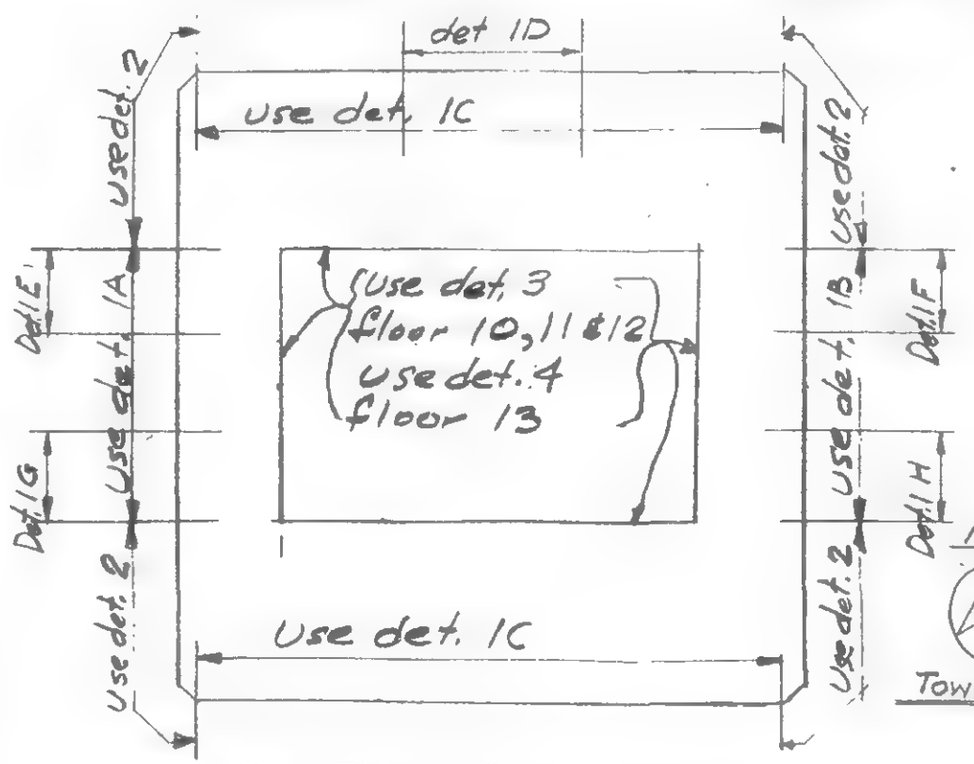


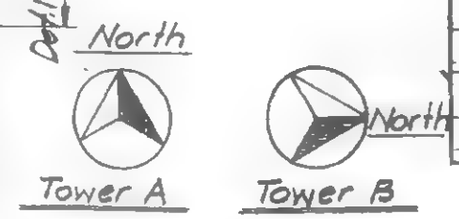


| SCHEDULE OF FLOORS | | |
|---|---|---|
| DETAIL | TOWER A | TOWER B |
| 1A, 1B, 1C, 2 | — | 9 |
| 1A, 1B, 1C, 2, 3 | — | 10 - 12 |
| 1A, 1B, 1C, 2, 4 | — | 13 |
| 1A, 1B, 1C, 2 | — | 41 - 43 |
| 1A, 1B, 1D | — | 44 |
| 1B, 1D, 1G | — | 45 |
| 1G, 1H | — | 46 - 49 |
| 1A, 1B, 1C, 2 | 75 - 77 | 75 - 77 |
| 1A, 1B | 78 | 78 |
| 1B, 1E | 79 | 79 |
| 1E, 1F | 80 - 83 | 80 - 83 |
| 1A, 1B, 1C, 2 | 107 | 107 |

DESIGNED
DRAWN
REVIEWED

19-AB-962

SKILLING, HELLE, CHRISTIANSEN, ROBERTSON — Structural & Civil Engineers

PROJECT: THE WORLD TRADE CENTER | TITLE: MODIFICATION TO BEAM OPENINGS | DATE: 4/28/70

REVISIONS

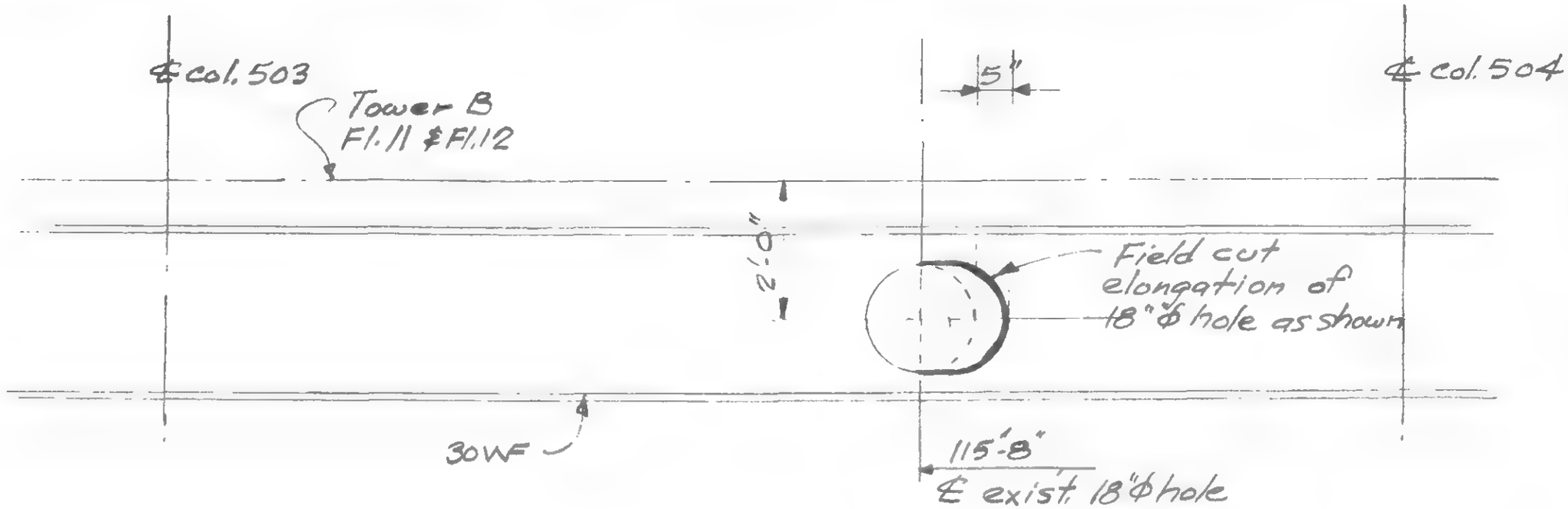


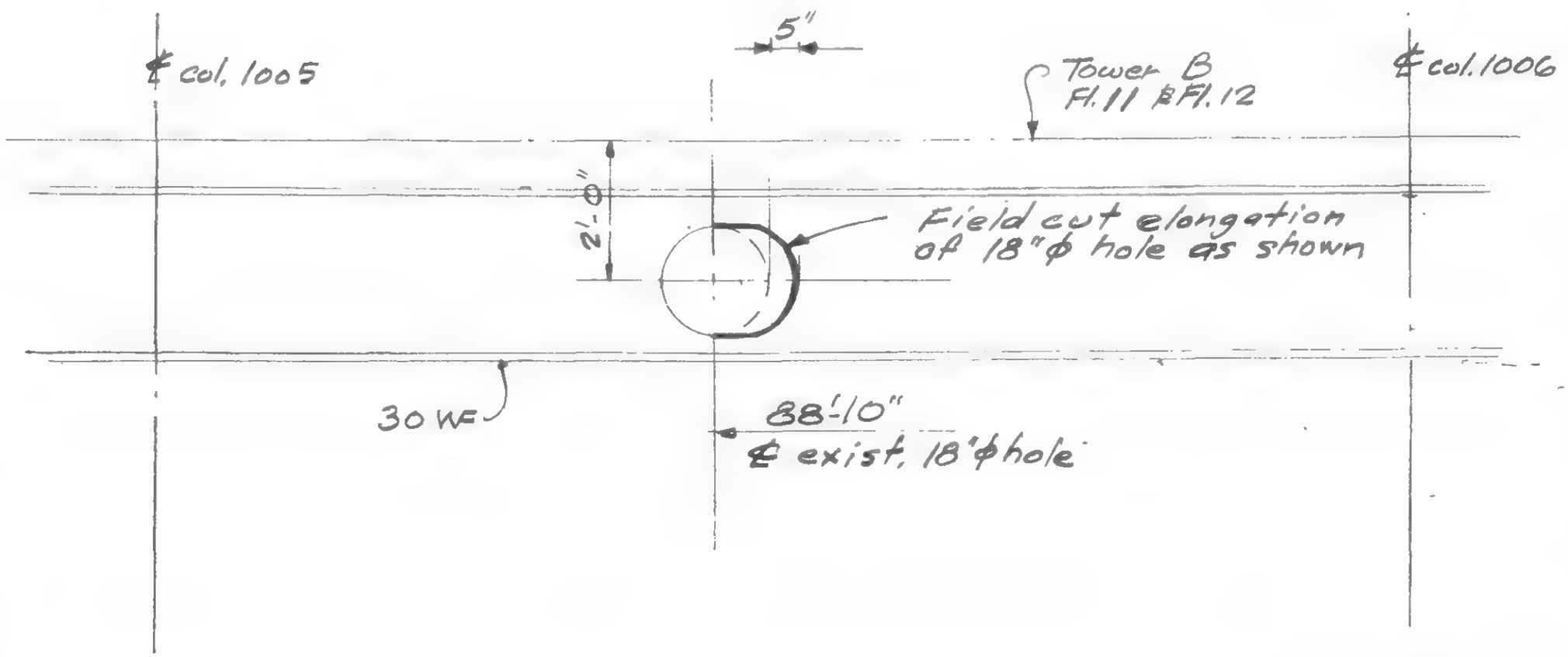


DESIGNED

DRAWN

REVIEWED

19-B-965

SKILLING, HELLE, CHRISTIANSEN, ROBERTSON — Structural & Civil Engineers

PROJECT: THE WORLD TRADE CENTER | TITLE: FLOOR TRUSS DETAIL 10B - REPAIR | DATE: 5/11/70

REVISIONS

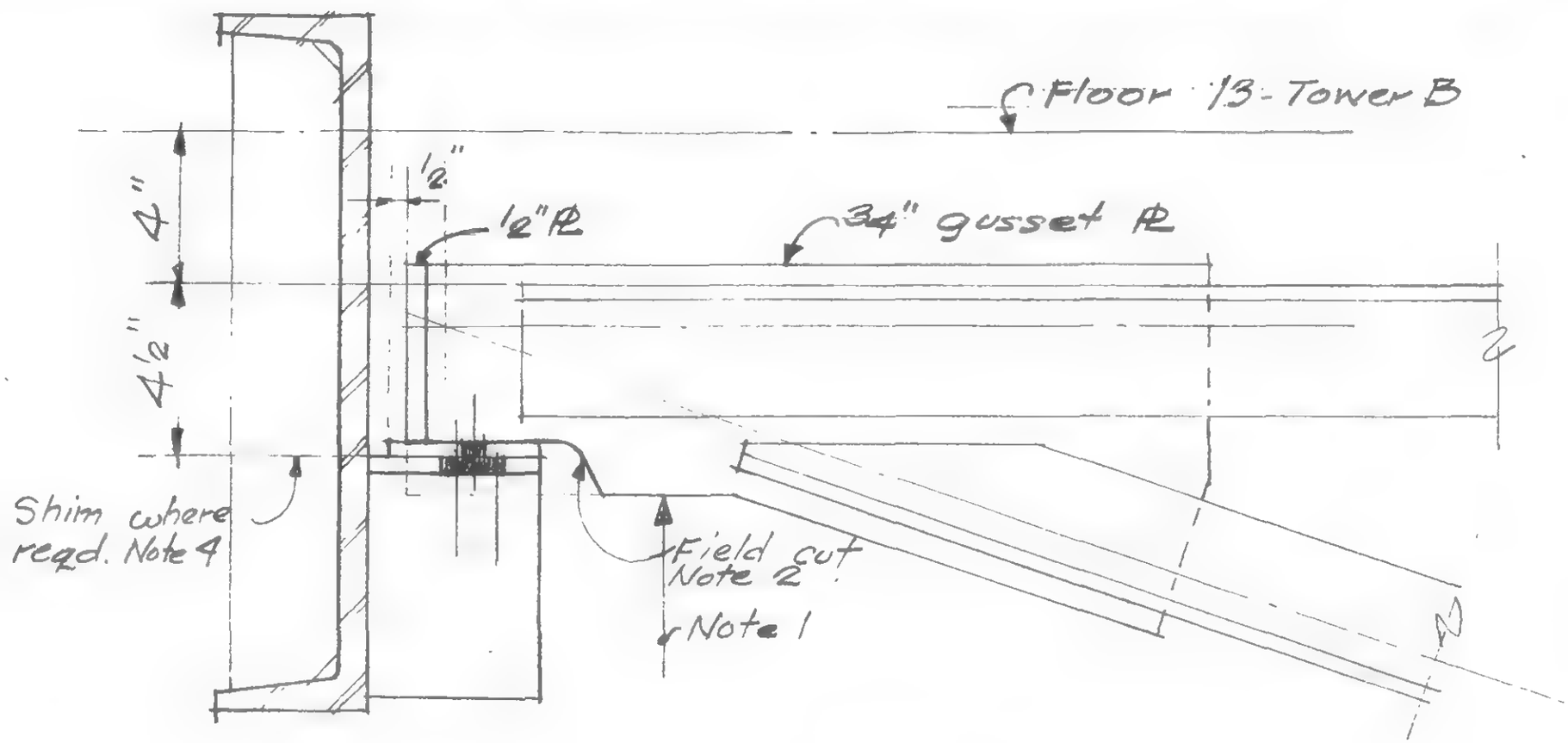


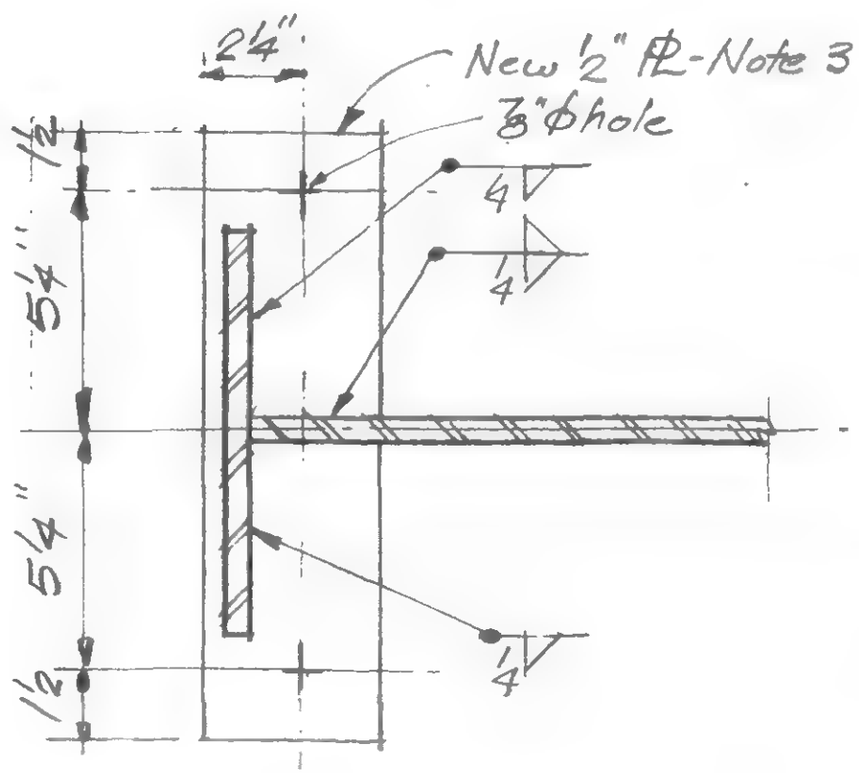


1. Shore truss for 5 kips.
2. Cut ¾" gusset PL of truss and ½" end PL of truss as shown.
3. Provide new ½" PL and weld as shown.
4. Provide shim stock as required.
5. Lower truss end ½".

Ref. dwg. 7-B8-10.8

19-B-966

LICENSED PROFESSIONAL ENGINEER — LESLIE E. ROBERTSON — No. 34360 — UNIVERSITY OF THE STATE OF NEW YORK

DESIGNED

DRAWN

REVIEWED

SKILLING, HELLE, CHRISTIANSEN, ROBERTSON — Structural & Civil Engineers

PROJECT: THE WORLD TRADE CENTER | TITLE: FL. 107 BEAM SEAT REINFORCING | DATE: 6-17-70

REVISIONS

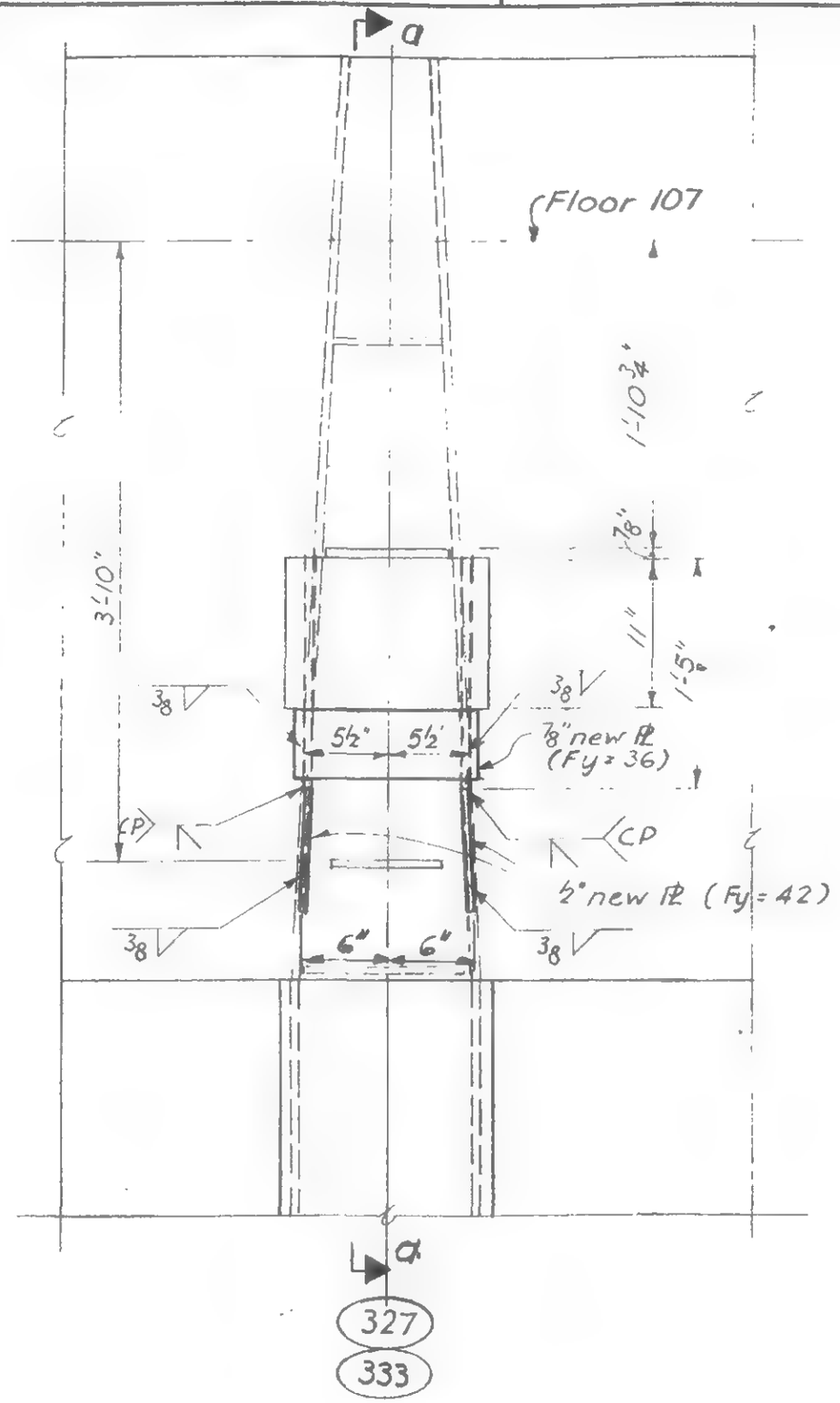


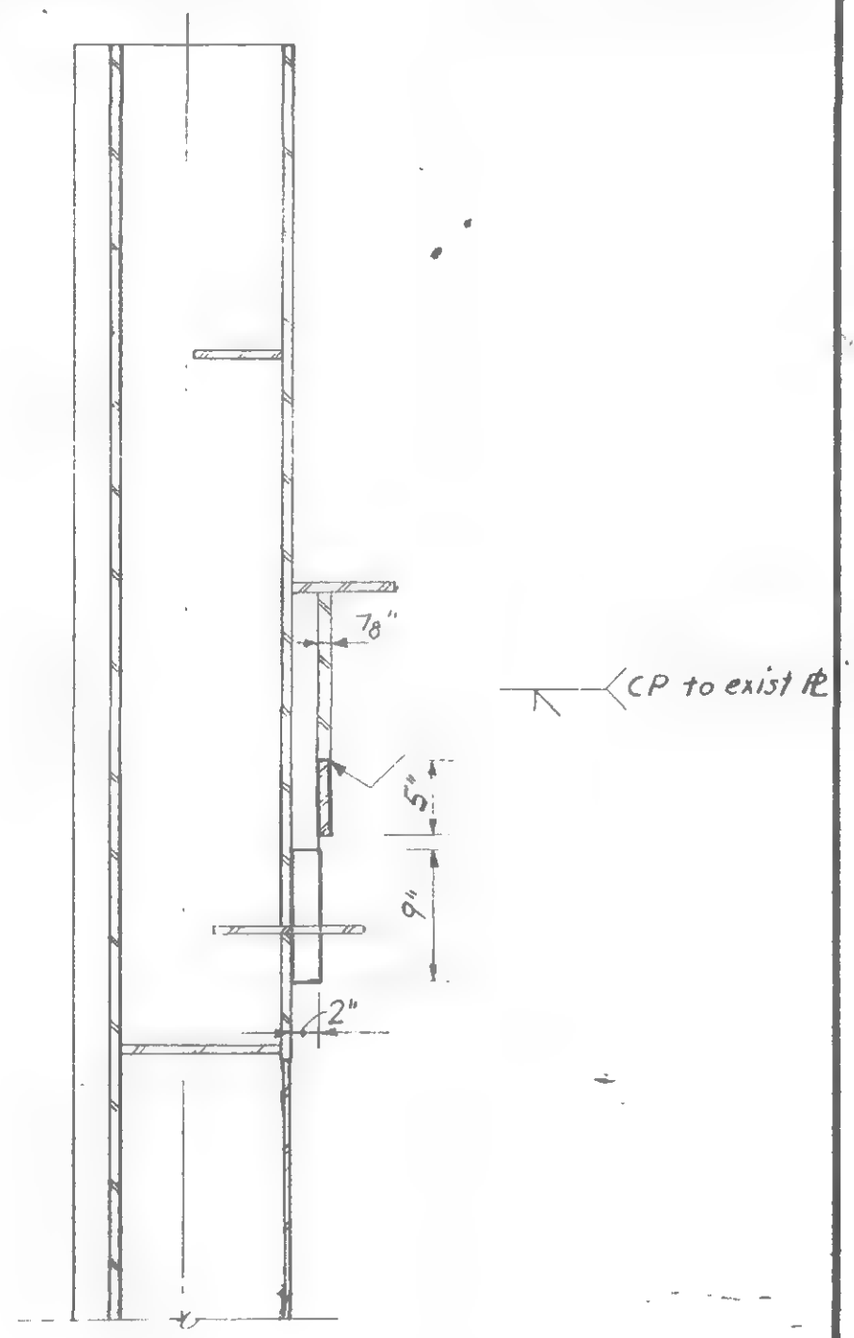


Section a-a

Beam Seat Reinforcing
Floor 107, Tower A
Columns 327, 333

LICENSED PROFESSIONAL ENGINEER — LESLIE E. ROBERTSON — No. 24360 — UNIVERSITY OF THE STATE OF NEW YORK

DESIGNED

DRAWN F. Smith

CHECKED

19-A-967

SKILLING, HELLE, CHRISTIANSEN, ROBERTSON — Structural & Civil Engineers

PROJECT: THE WORLD TRADE CENTER | TITLE: BEAM SEAT REPAIR - FL. 107 - TOWER B | DATE: 8-3-70

REVISIONS

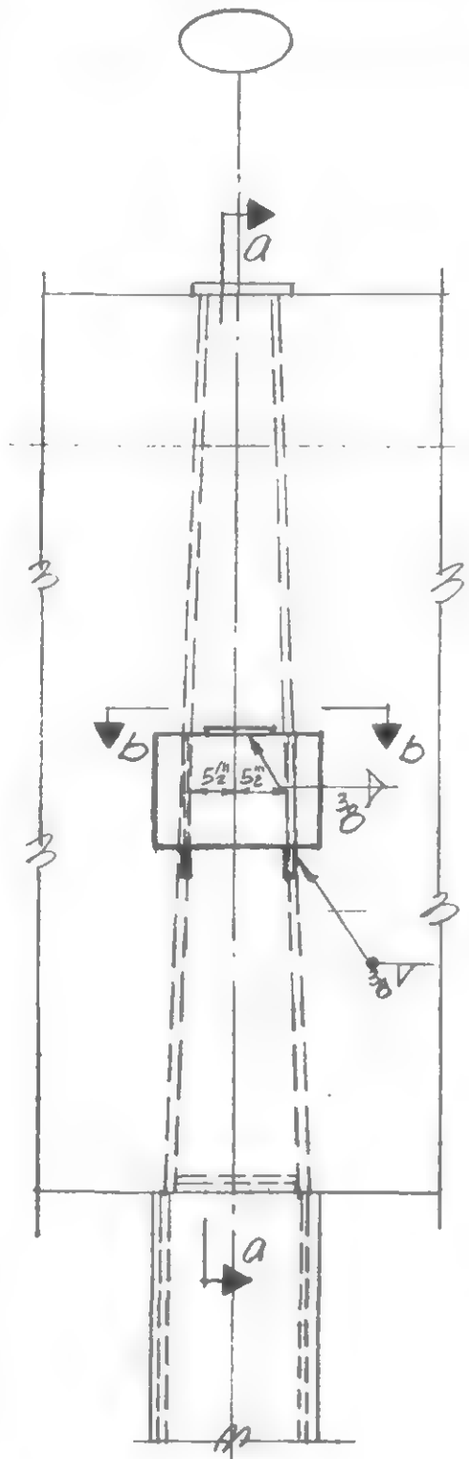


Elevation
Col. 212 & 412

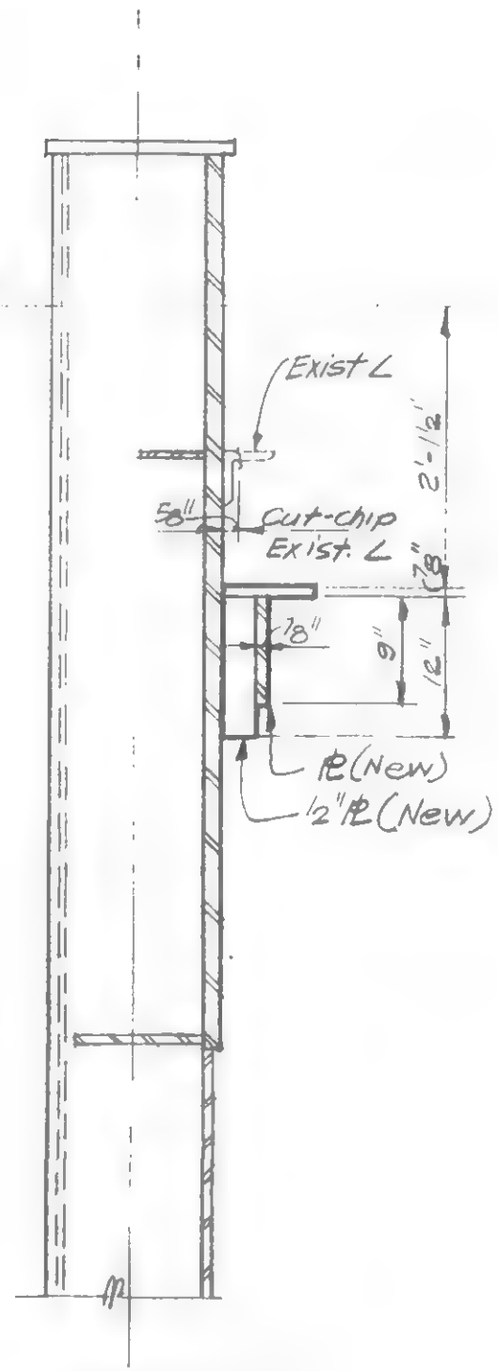


Section a-a

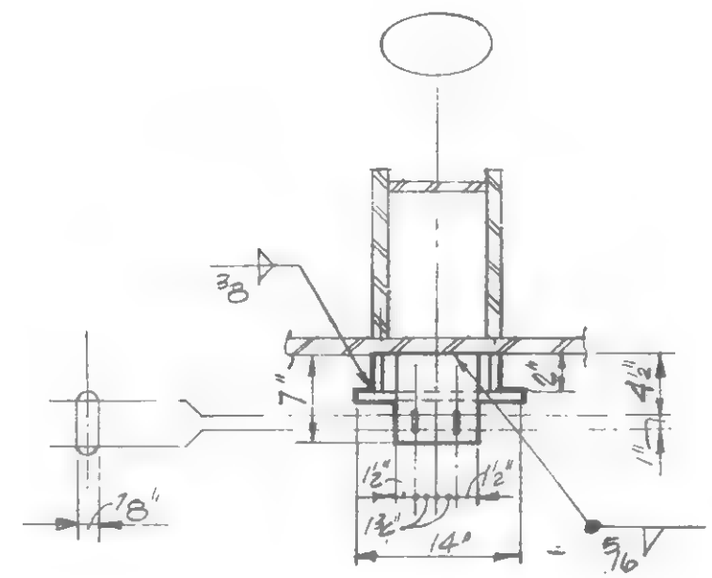


Section b-b

LICENSED PROFESSIONAL ENGINEER
LESLIE E. ROBERTSON
NO 34360
UNIVERSITY OF THE STATE OF NEW YORK

DESIGNED

DRAWN P. Orchi

REVIEWED

19-B-968

SKILLING, HELLE, CHRISTIANSEN, ROBERTSON — Structural & Civil Engineers

PROJECT: THE WORLD TRADE CENTER | TITLE: LOUVER SUPPORTS - FL. 42 | DATE: 8-7-70

REVISIONS

9-29-72

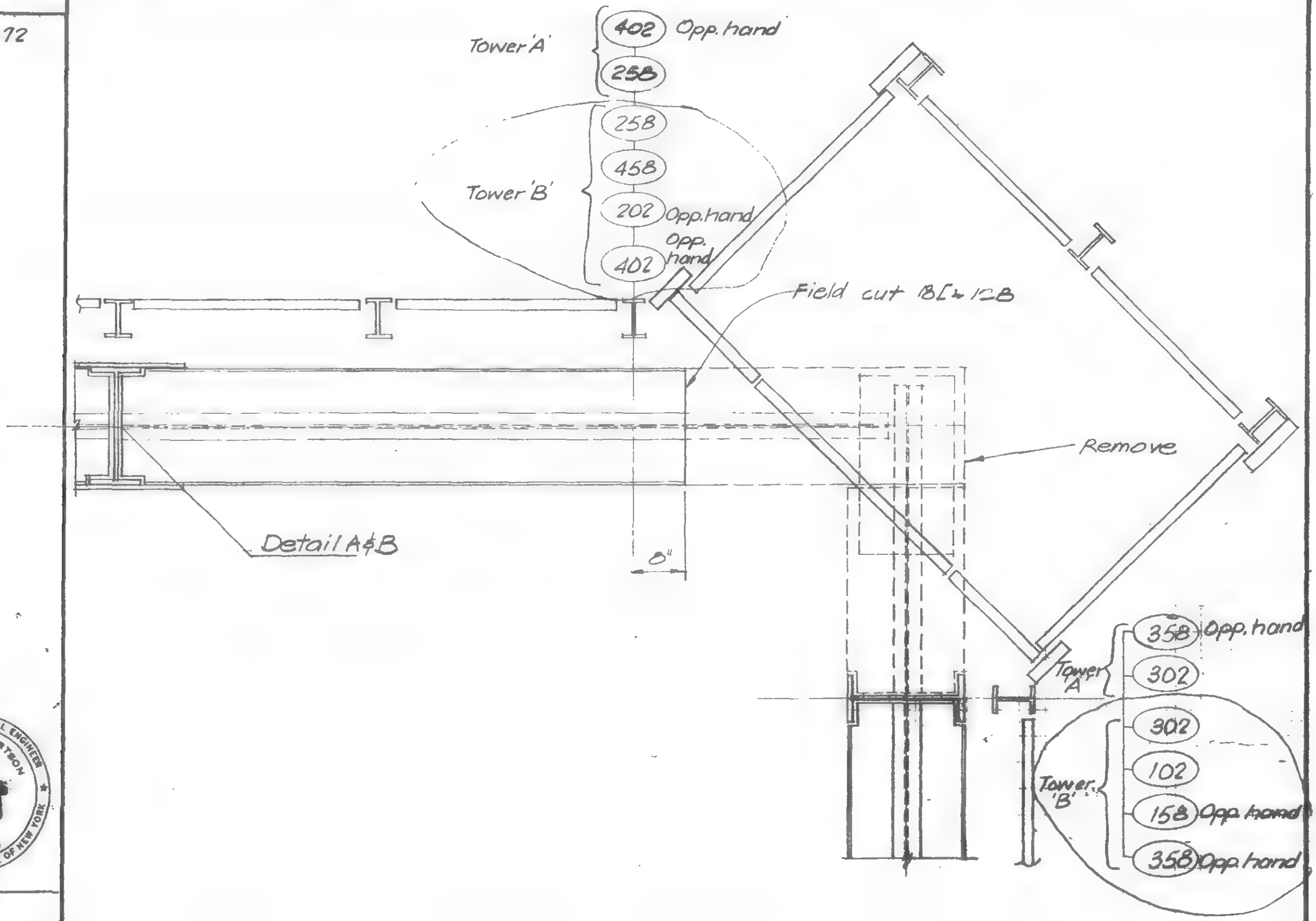


LICENSED PROFESSIONAL ENGINEER
LESLIE E. ROBERTSON
No. 34360
UNIVERSITY OF THE STATE OF NEW YORK

DESIGNED

DRAWN P. Orehi

REVIEWED

19AB969.1

SKILLING, HELLE, CHRISTIANSEN, ROBERTSON — Structural & Civil Engineers

PROJECT: THE WORLD TRADE CENTER | TITLE: LOWER SUPPORTS - FL. 43 | DATE: 8-7-70

REVISIONS: 9-29-72

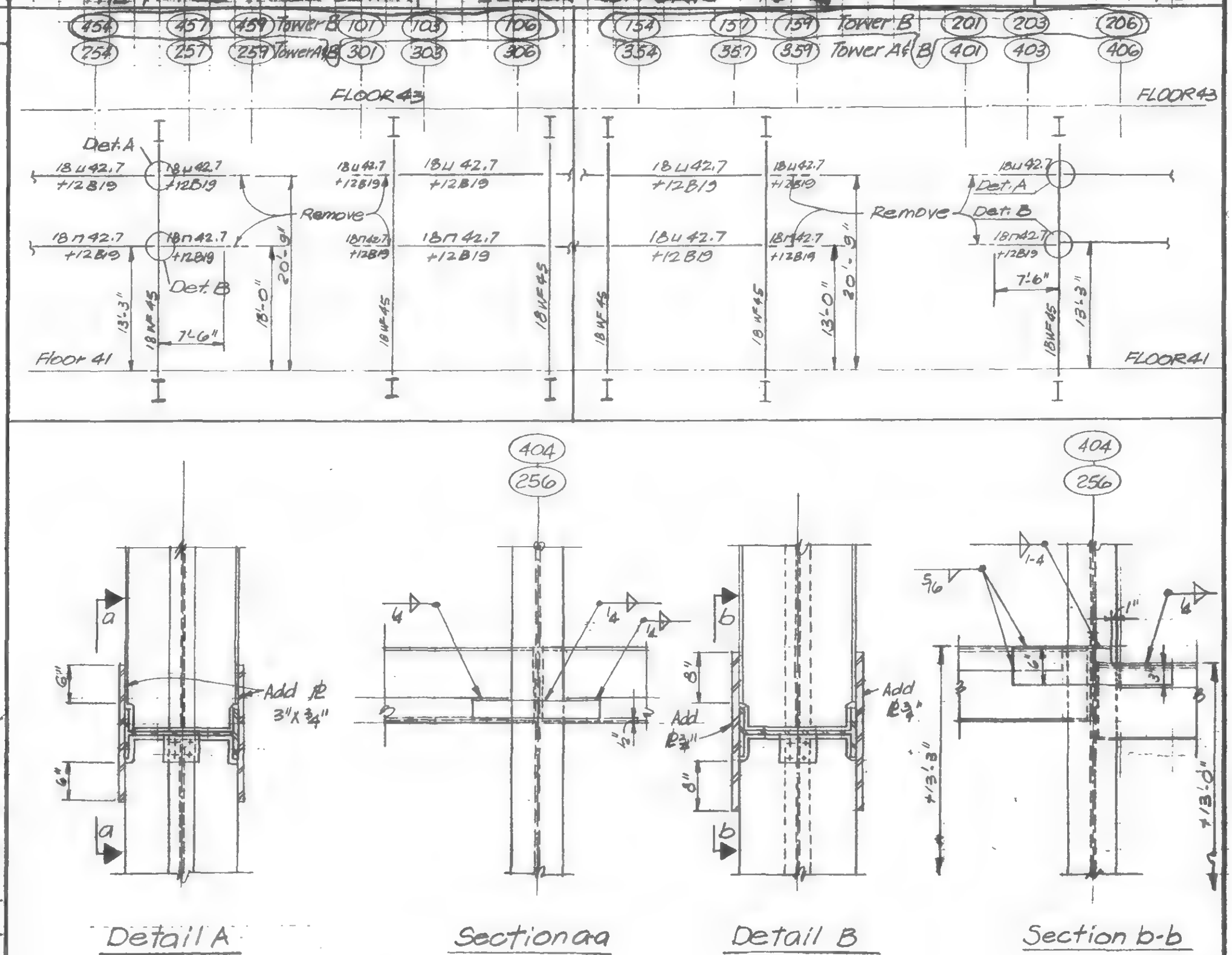


LICENSED PROFESSIONAL ENGINEER — LESLIE E. ROBERTSON — No. 34360 — UNIVERSITY OF THE STATE OF NEW YORK

DESIGNED

DRAWN: P. Oreki

REVIEWED

19-AB969.2

SKILLING, HELLE, CHRISTIANSEN, ROBERTSON — Structural & Civil Engineers

PROJECT: THE WORLD TRADE CENTER | TITLE: REPAIR OPENING FLOOR 7 - TOWER A - ALT.#1 | DATE: 8-7-70

REVISIONS

Procedure: (or more if req'd.)

1. Remove 7" of slab along the dotted lines with rough surface to expose the existing bars 6" min.
2. Provide #6 short bars spanning btw. existing opposite reinf. on each side of opng. (Field measure lenght of each bar)
3. Splice all Top, bottom & diag. bars as shown with T-series Caldweld splice.
4. Fill opng. with non-shrinkage concrete (f'c = 4000psi, same thickness as slab.
5. Reroute duct thru old existing opng.

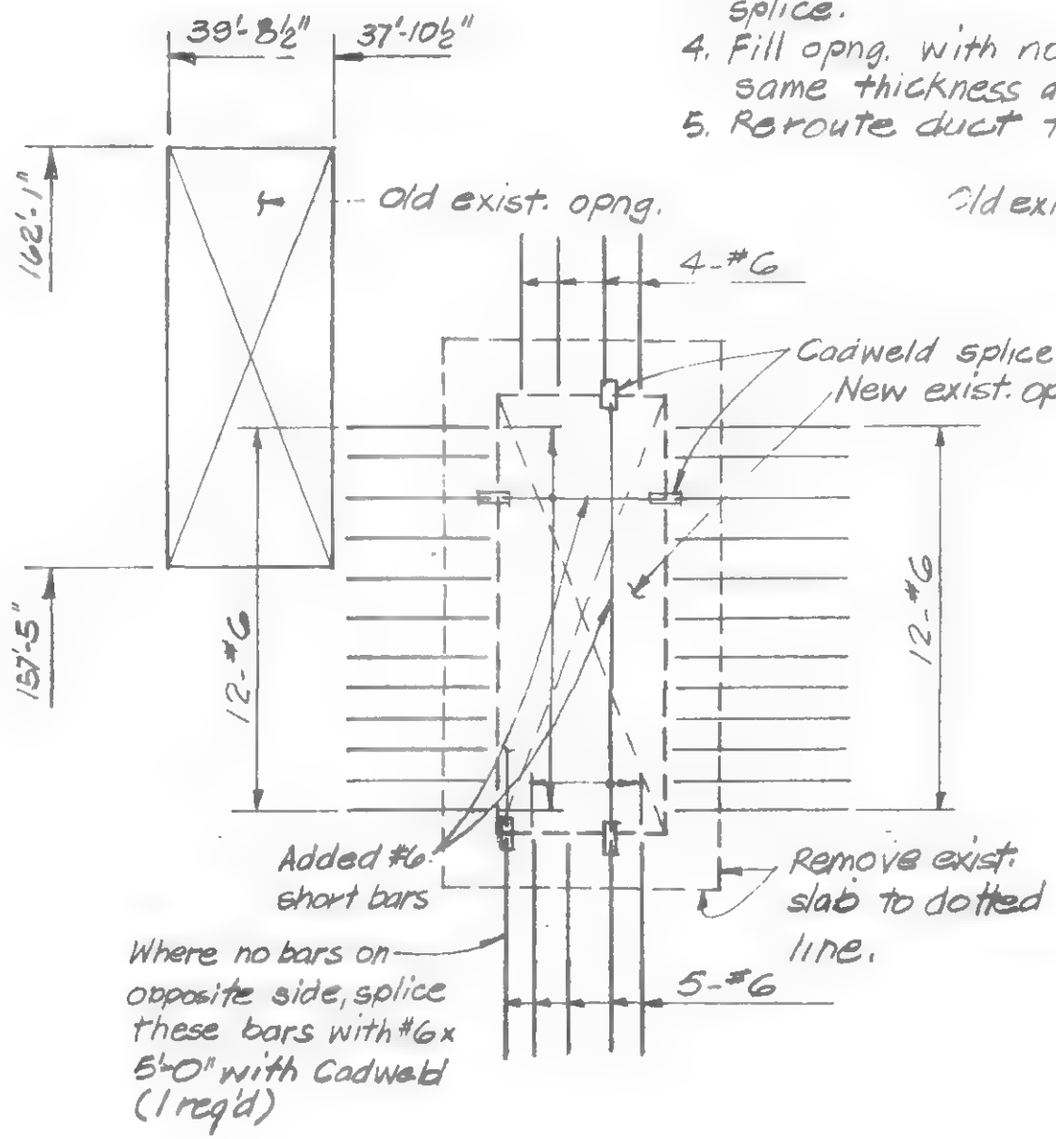


Top bars

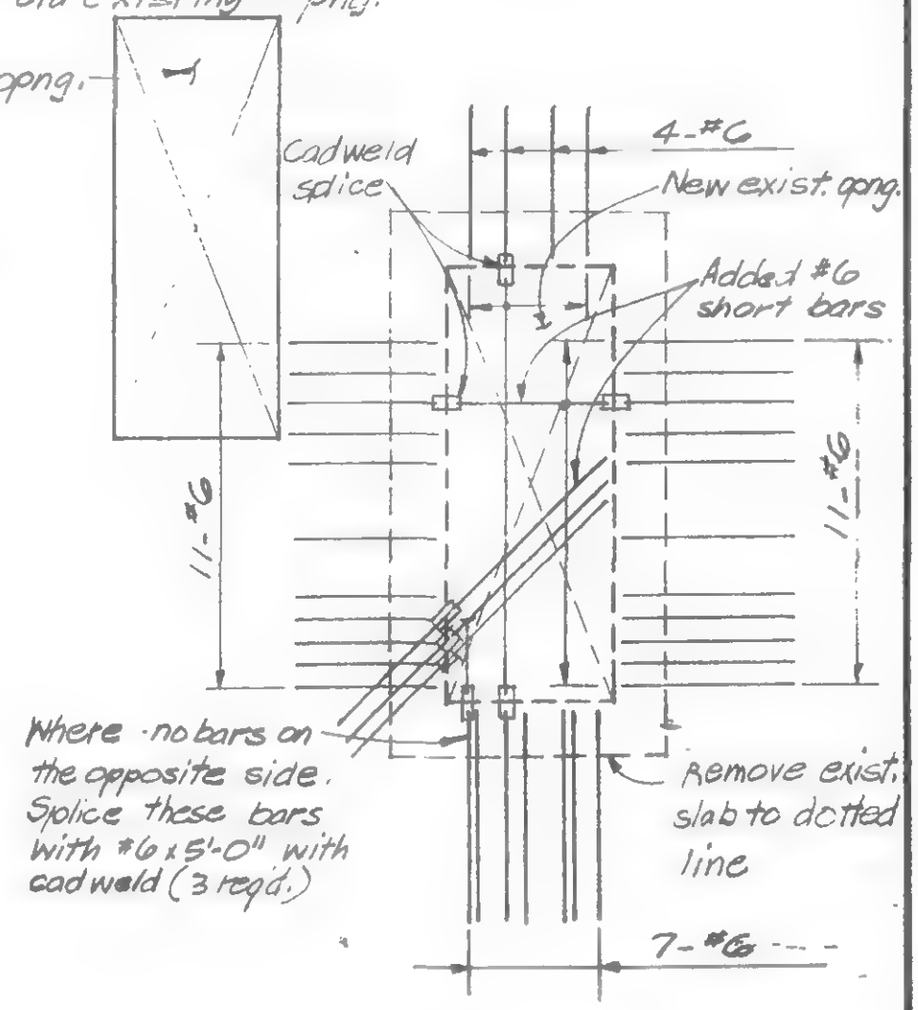


Bottom bars

LICENSED PROFESSIONAL ENGINEER — LESLIE E. ROBERTSON — No. 34360 — UNIVERSITY OF THE STATE OF NEW YORK

DESIGNED

DRAWN A. FRANQUI

REVIEWED

19-A-970.1

SKILLING, HELLE, CHRISTIANSEN, ROBERTSON — Structural & Civil Engineers

PROJECT: THE WORLD TRADE CENTER | TITLE: REPAIR OPENING FLOOR 7 - TOWER A - ALT.#2 | DATE: 8-7-10

REVISIONS

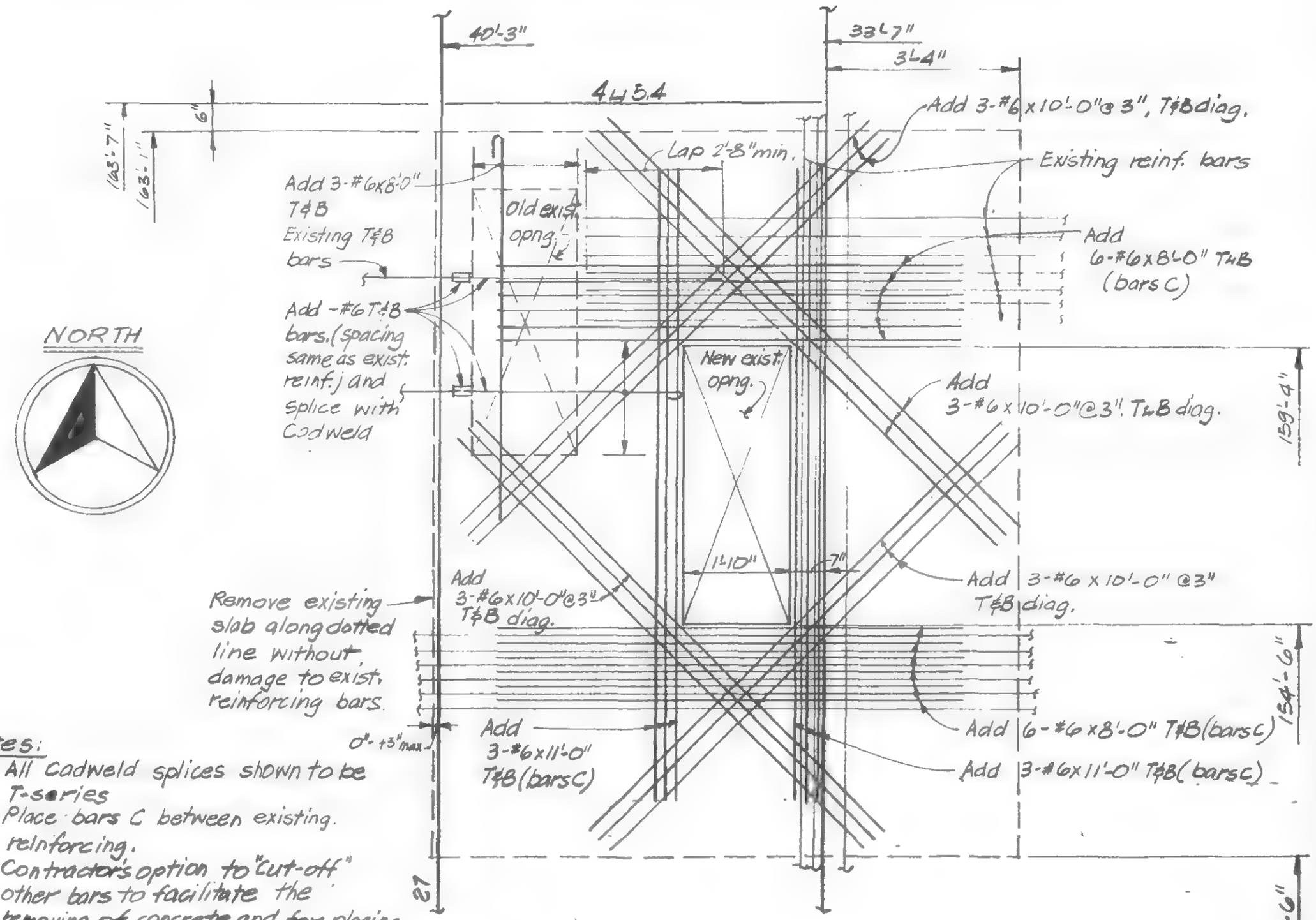


Notes:

1. All Cadweld splices shown to be T-series
2. Place bars C between existing reinforcing.
3. Contractor's option to "cut-off" other bars to facilitate the removing of concrete and for placing of reinforcing however bars must be replaced and connected by Cadweld splices.
4. All concrete to be non-shrinkage with $f'_c = 4000$ psi

LICENSED PROFESSIONAL ENGINEER — LESLIE E. ROBERTSON — No. 34360 — UNIVERSITY OF THE STATE OF NEW YORK

DESIGNED

DRAWN P. Orlei

REVIEWED

19-A-970.2

SKILLING, HELLE, CHRISTIANSEN, ROBERTSON — Structural & Civil Engineers

PROJECT: THE WORLD TRADE CENTER

TITLE: REPAIR TO SEPERATOR BEAM. COL. 1003-FL. 44 & 45

DATE: 9/26/70

REVISIONS: 9/25/70

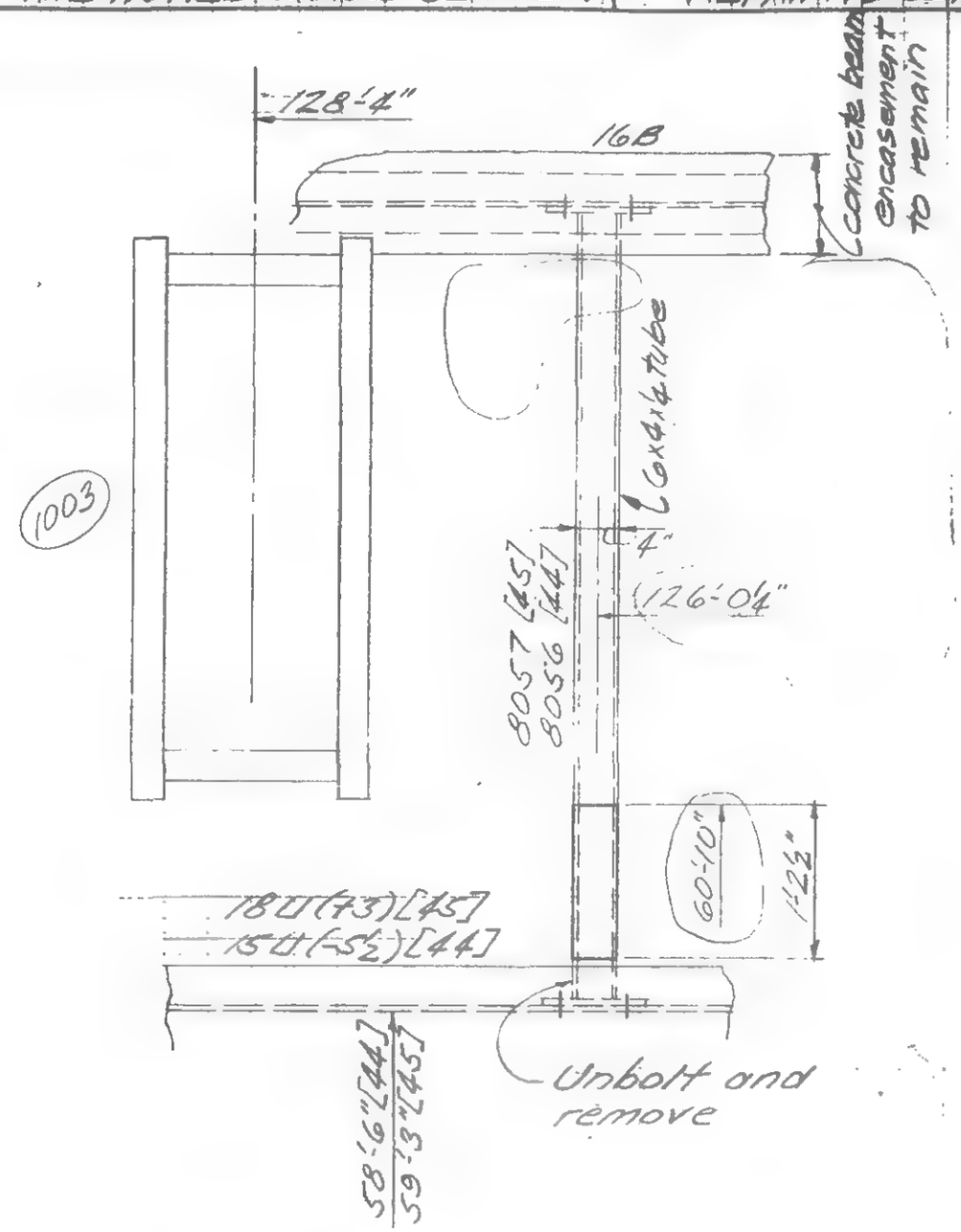


Existing Port Plan
Floors 44 & 45

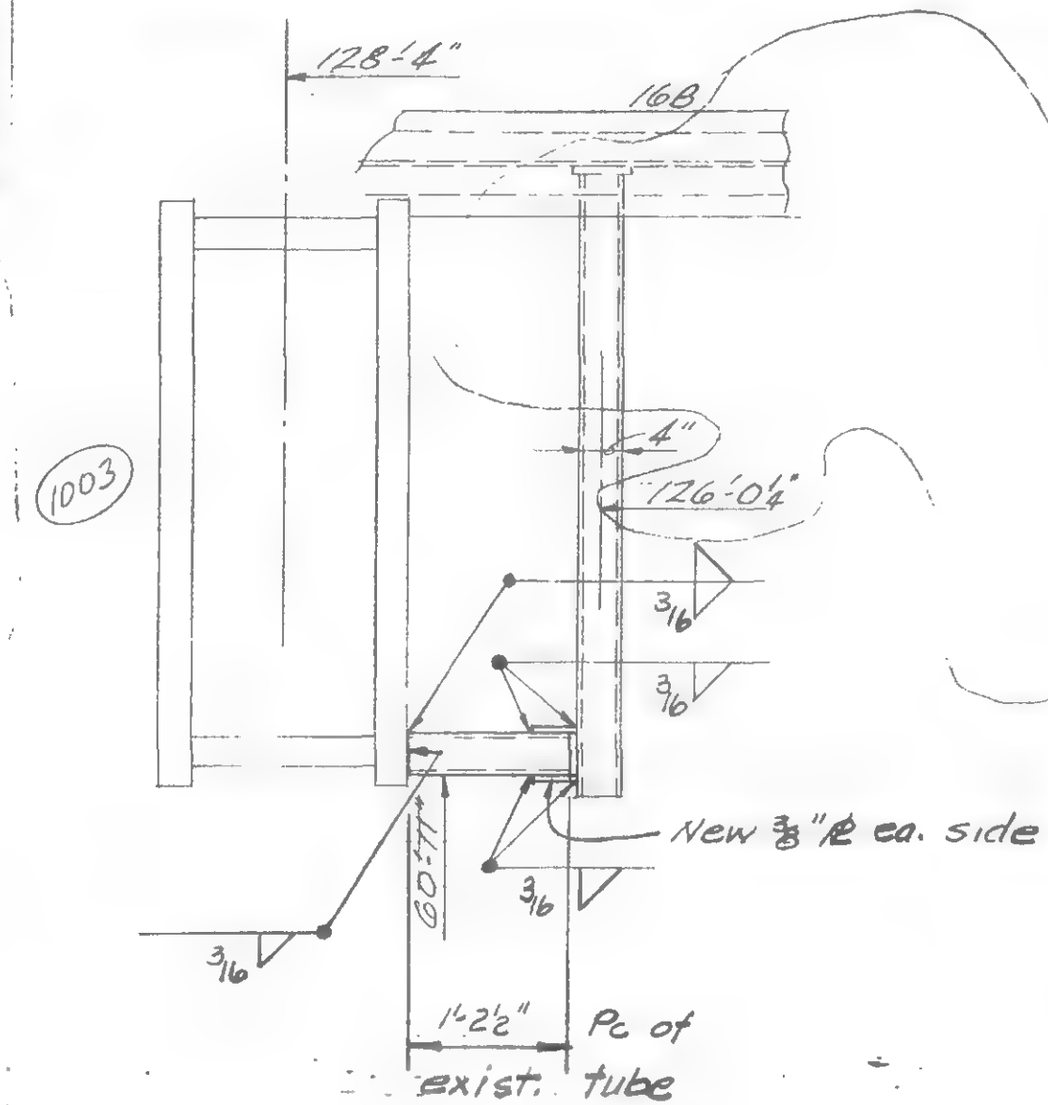


Revised Port Plan
To accomodate Elevator as detailed on Otis Elevator Co. Dwg. No. 347308-PN dated 6-27-70

LICENSED PROFESSIONAL ENGINEER — LESLIE E. ROBERTSON — NO. 34360 — UNIVERSITY OF THE STATE OF NEW YORK

DESIGNED

DRAWN J. Hdcan

REVIEWED

19-A-971

SKILLING, HELLE, CHRISTIANSEN, ROBERTSON — Structural & Civil Engineers

PROJECT: THE WORLD TRADE CENTER | TITLE: NEW OPENING FLOOR 77 - TOWER A | DATE: 8-25-70

REVISIONS

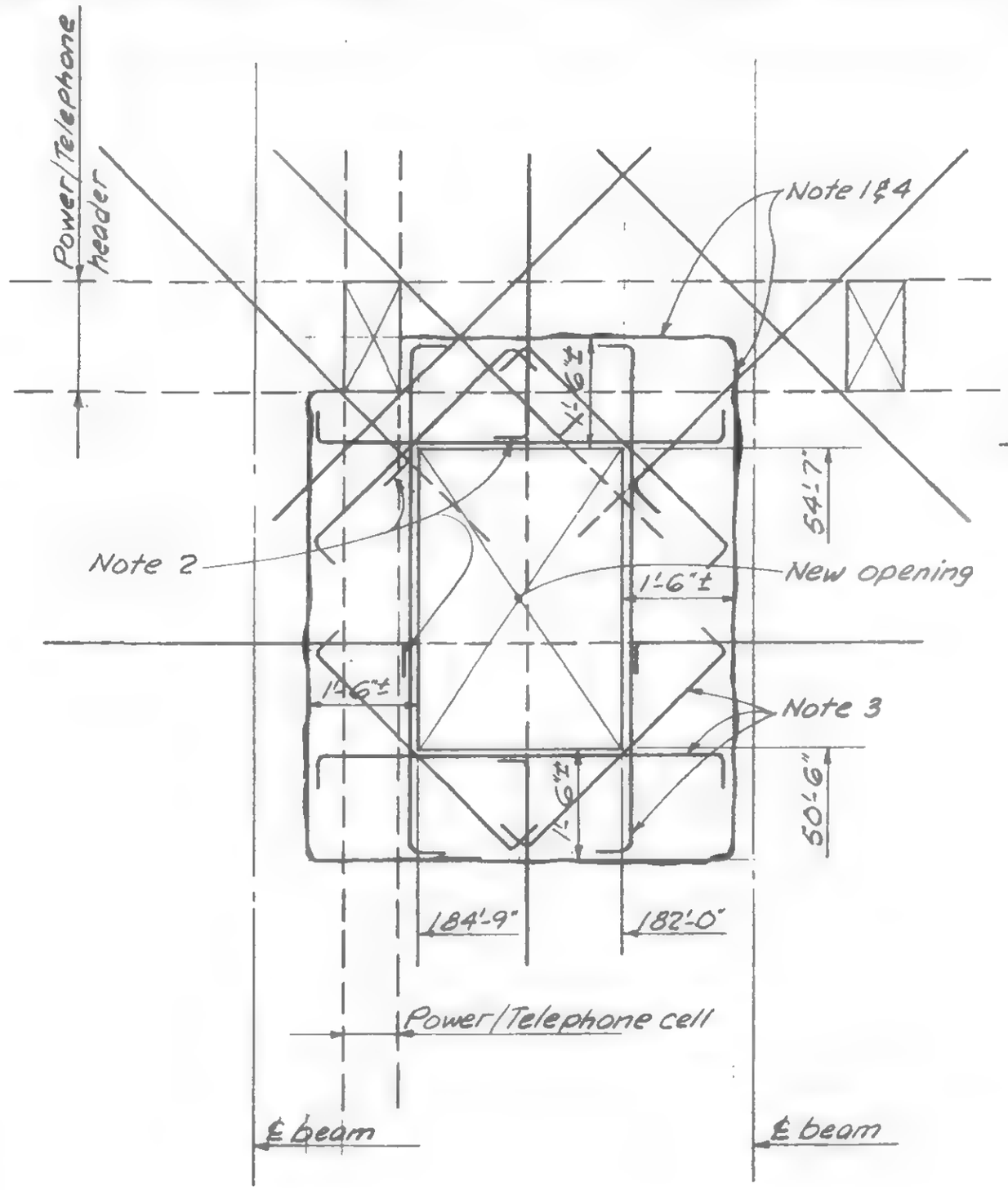


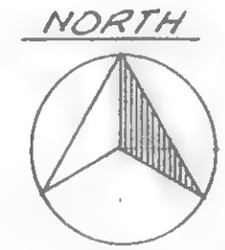


Notes

1. Remove concrete to line indicated without damaging existing reinforcing steel or Power/Telephone header or cell.
2. Hook all existing reinforcing steel at new opening.
3. Add 2-#5 each side and each corner, hook each end.
4. Coat face of concrete with approved epoxy bonding compound and cast slab to opening dimensions shown, with non shrink f'c = 3000 psi stone aggregate concrete.

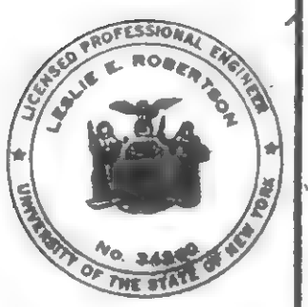


DESIGNED

DRAWN A. FRANQUI

REVIEWED

19-A-972

SKILLING, HELLE, CHRISTIANSEN, ROBERTSON — Structural & Civil Engineers

| PROJECT | TITLE | DATE |
|---|---|---|
| THE WORLD TRADE CENTER | DETAIL AT HEADER DUCTS - FL. 44 | 9-28-70 |

REVISIONS

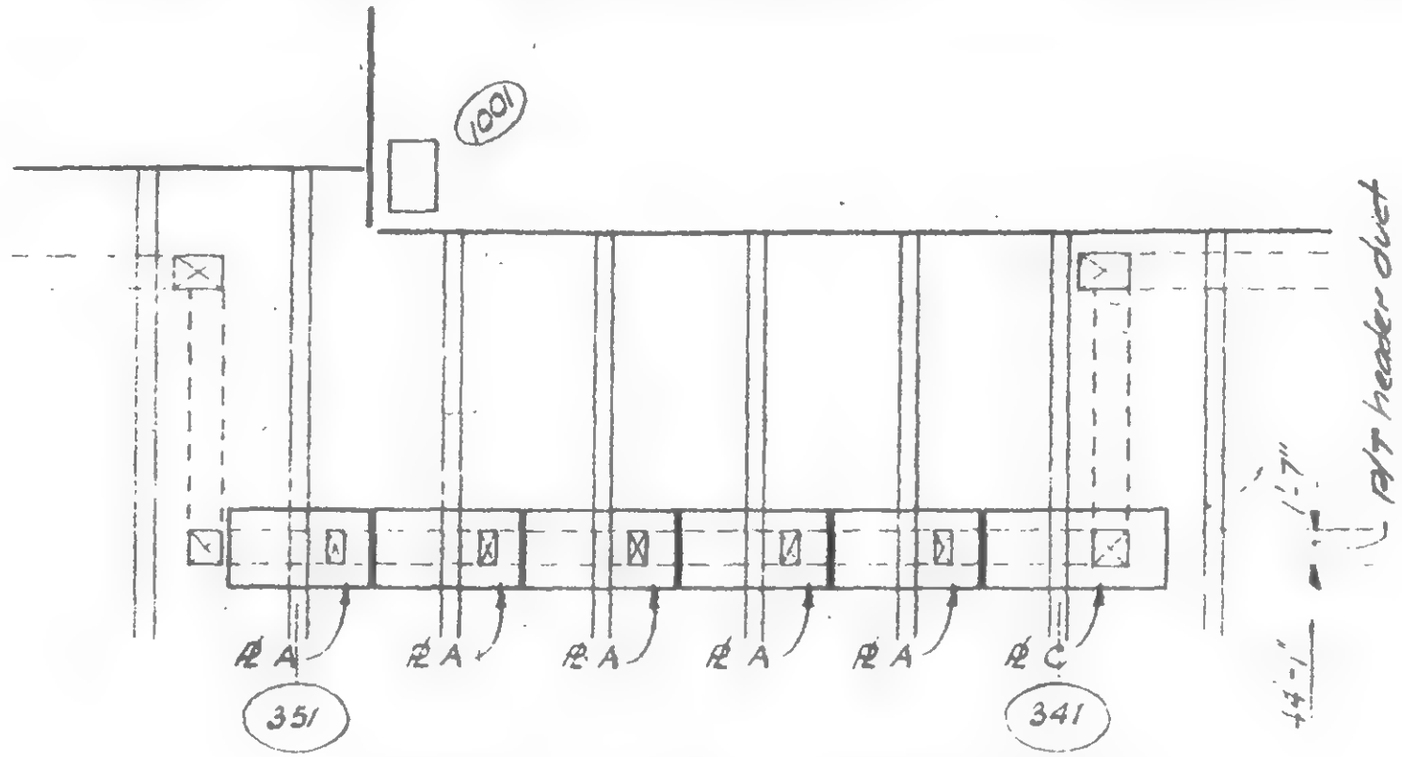


Part Plan SE Fl. 44 Tower B

See 19-B-973.2 for details of ℄ A thru D

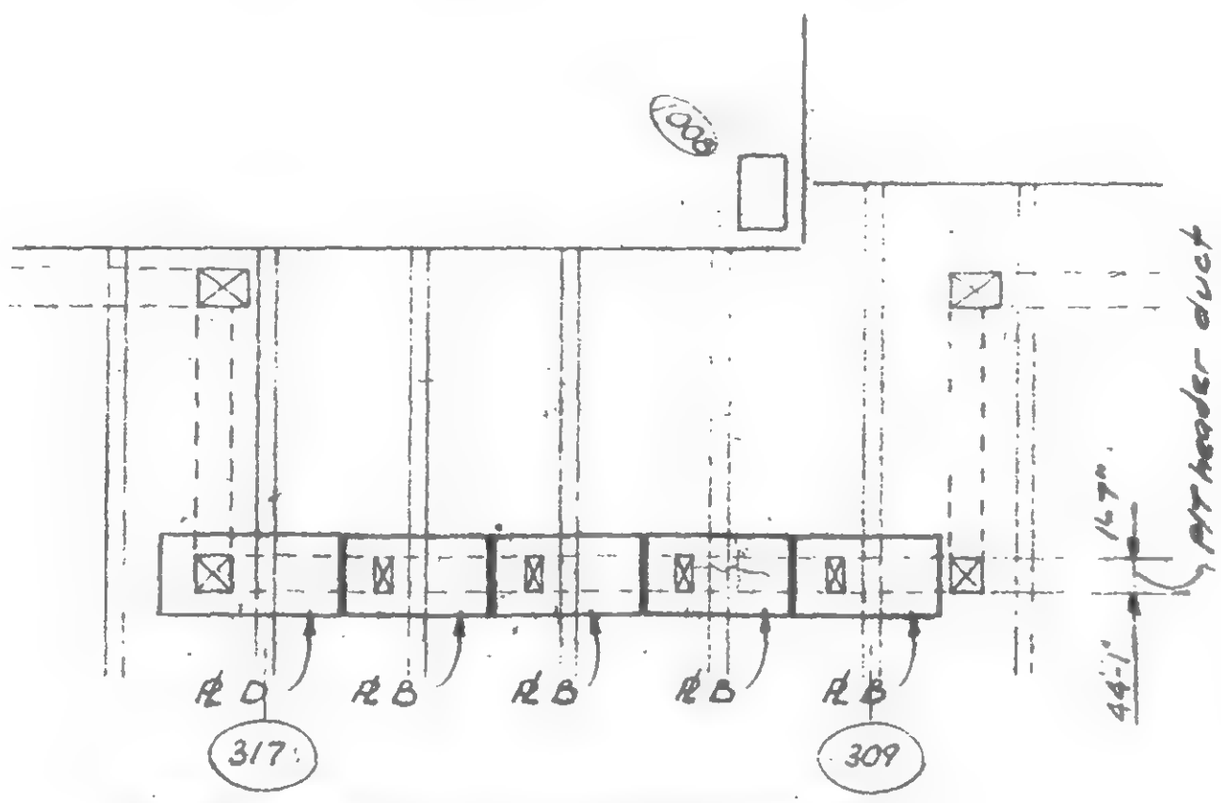


Part Plan NE Fl. 44 Tower B

LICENSED PROFESSIONAL ENGINEER — LESLIE E. ROBERTSON — No 34360 — UNIVERSITY OF THE STATE OF NEW YORK

SIGNED

DRAWN D. Huggins

REVIEWED

19-B-972.1

SKILLING, HELLE, CHRISTIANSEN, ROBERTSON — Structural & Civil Engineers

PROJECT: THE WORLD TRADE CENTER | TITLE: DETAILS AT HEADER DUCTS - FL. 44 | DATE: 9-28-70

REVISIONS

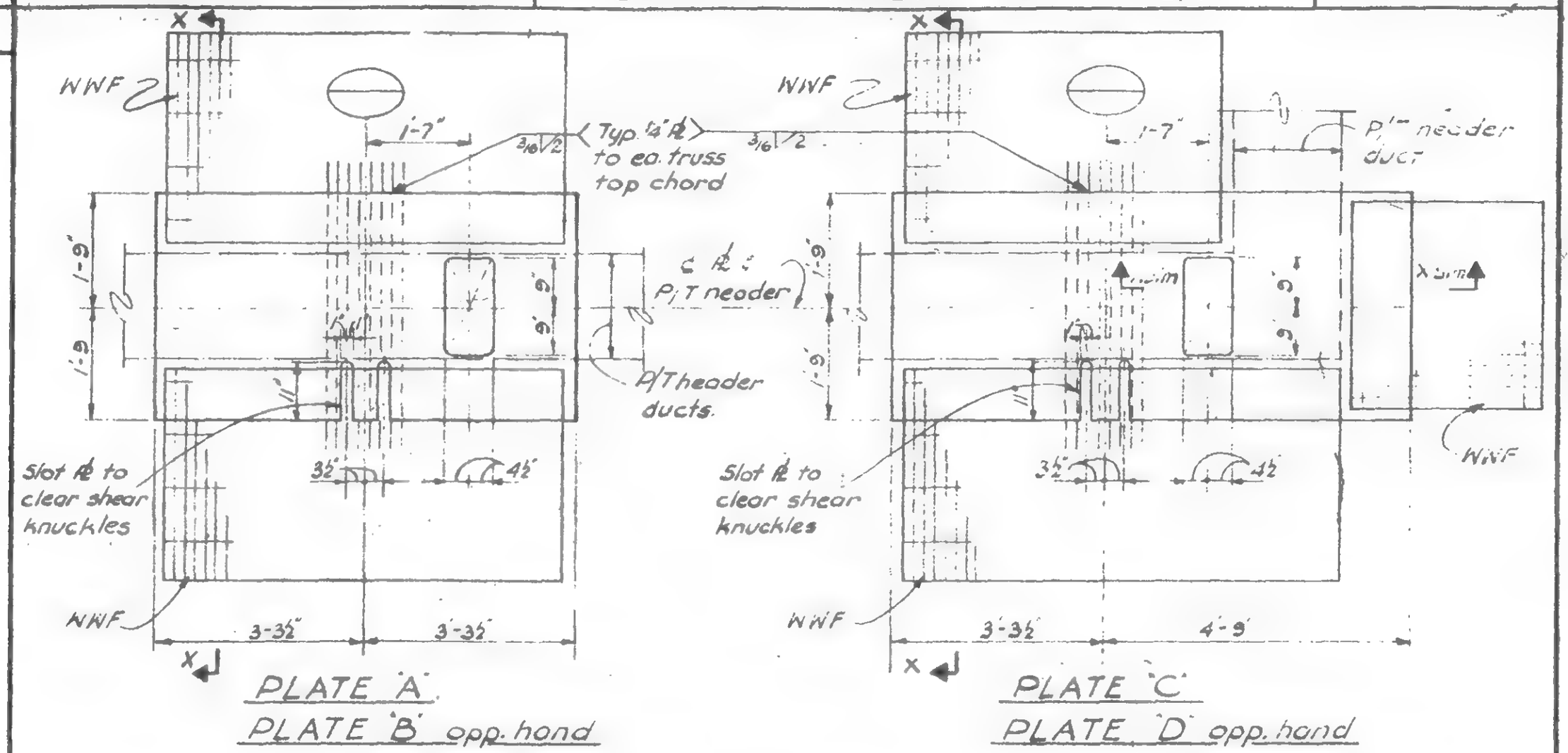


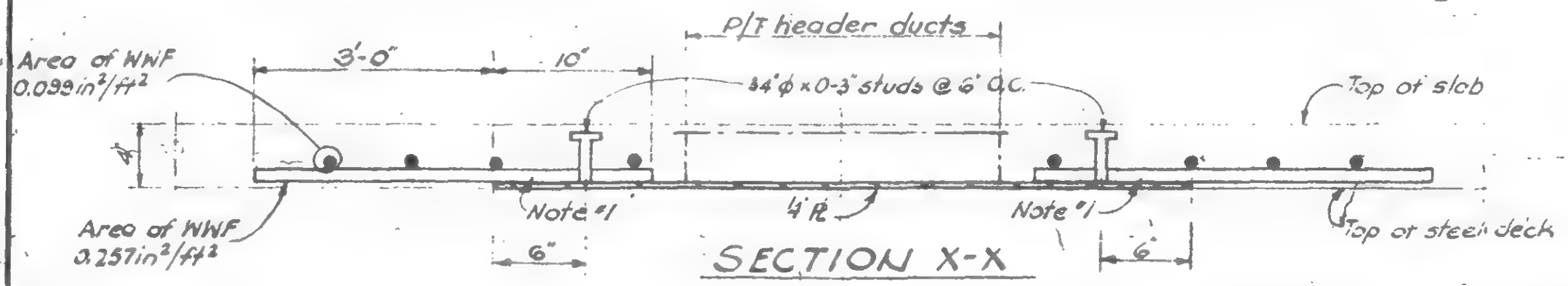


SECTION X-X

Note:

1. Weld each wire to develop tensile strength of WWF. Welding procedure to be qualified and submitted to the Engineer for approval.

LICENSED PROFESSIONAL ENGINEER — LESLIE E. ROBERTSON — No. 34360 — UNIVERSITY OF THE STATE OF NEW YORK

SIGNED

DRAWN D. Huggins

REVIEWED

19-B-973.2

SKILLING, HELLE, CHRISTIANSEN, ROBERTSON — Structural & Civil Engineers

PROJECT: THE WORLD TRADE CENTER | TITLE: CORE COLUMN REINFORCING FL. 98-106 | DATE: 12-1-71

REVISIONS

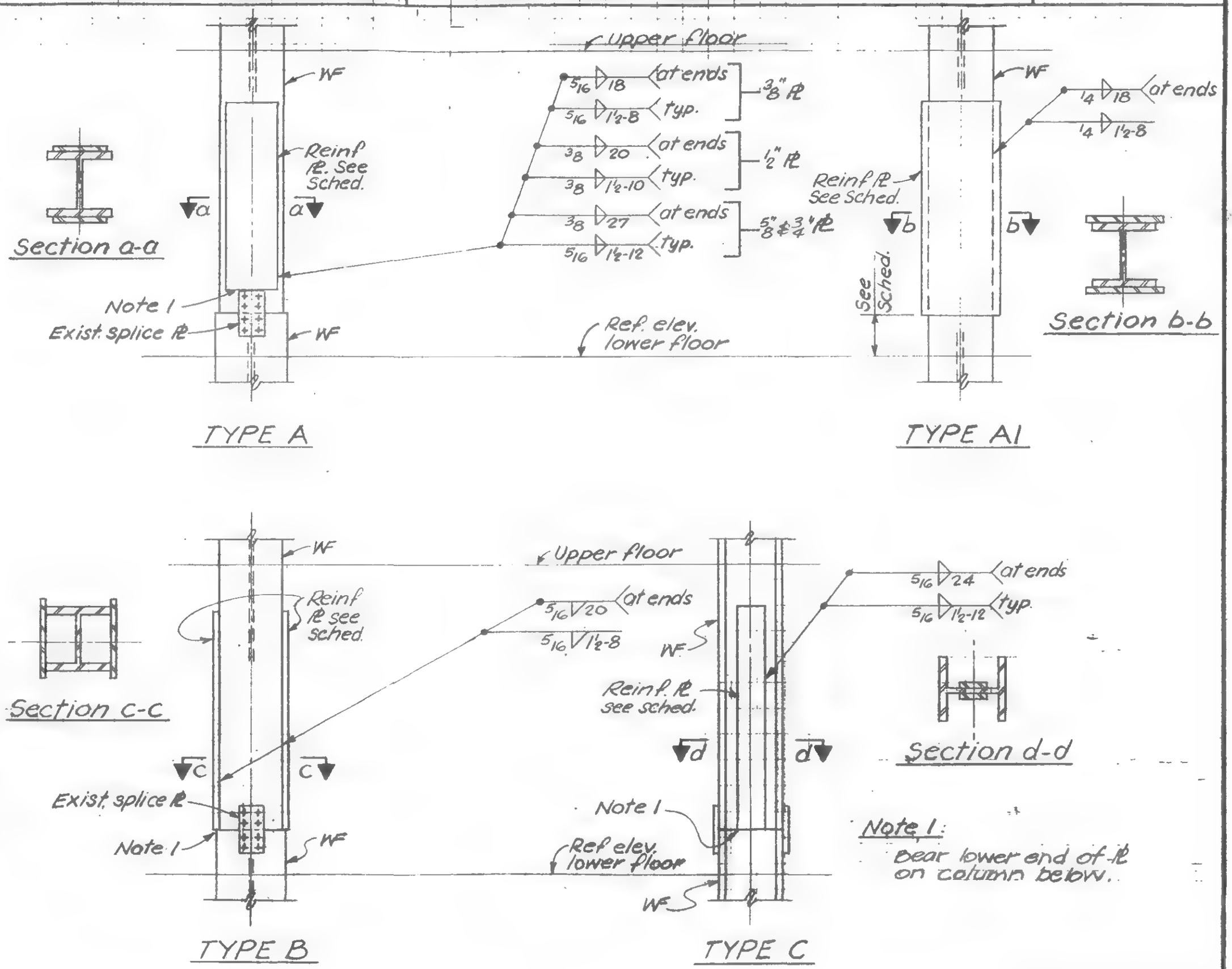


Note 1:
Bear lower end of PL on column below.

LICENSED PROFESSIONAL ENGINEER — LESLIE E. ROBERTSON — No. 34360 — UNIVERSITY OF THE STATE OF NEW YORK

DESIGNED

DRAWN S.C.

REVIEWED H.R.

19-AB-974.2

SKILLING, HELLE, CHRISTIANSEN, ROBERTSON — Structural & Civil Engineers

PROJECT: THE WORLD TRADE CENTER | TITLE: CORE COLUMN REINFORCING : FL. 98-106 | DATE: 12-1-71

REVISIONS

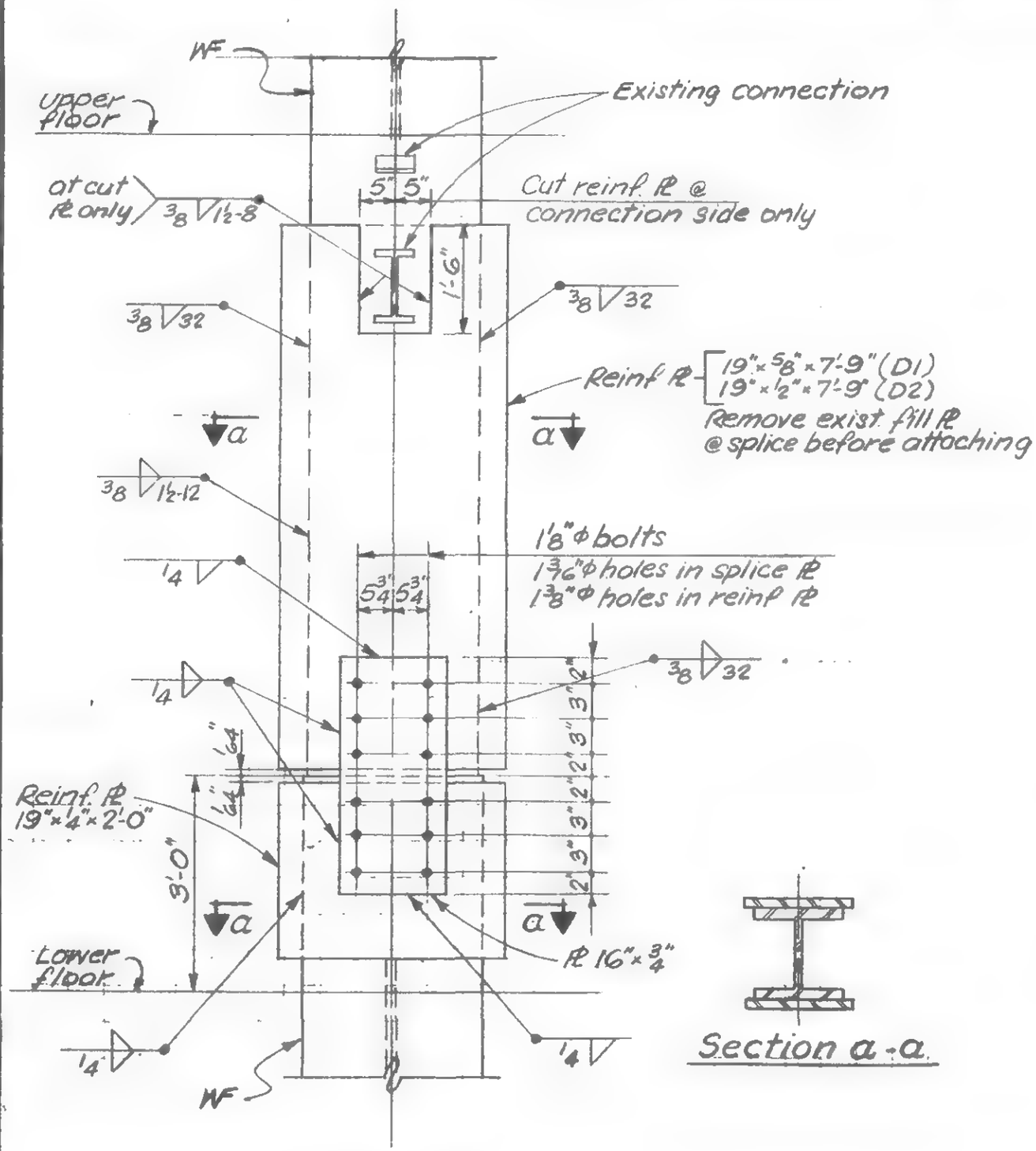


TYPE D1
TYPE D2



Section a-a

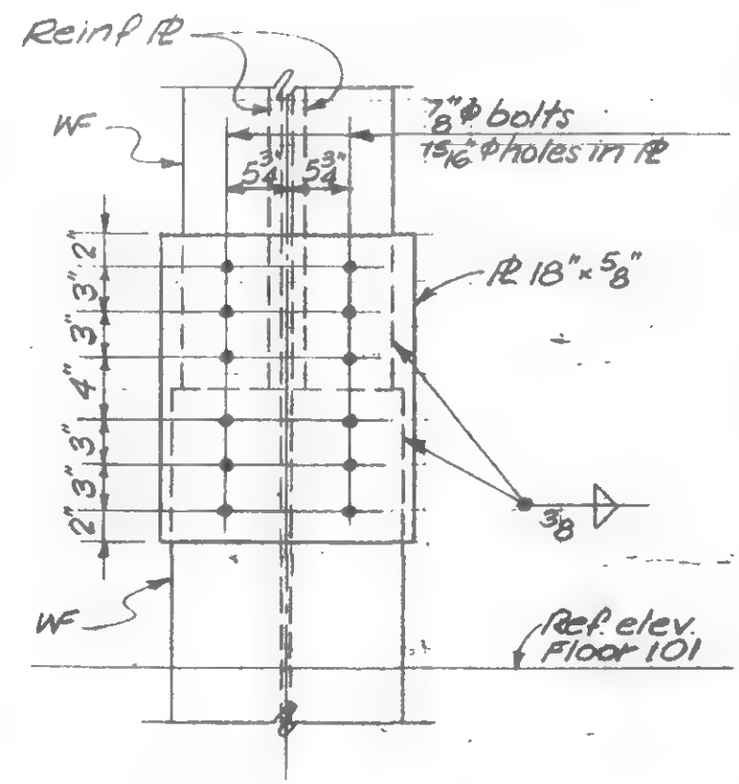


TYPE F

LICENSED PROFESSIONAL ENGINEER — LESLIE E. ROBERTSON — No. 34360 — UNIVERSITY OF THE STATE OF NEW YORK

DESIGNED

DRAWN S.C.

REVIEWED H.R.

19-AB-974.3

SKILLING, HELLE, CHRISTIANSEN, ROBERTSON — Structural & Civil Engineers

PROJECT: THE WORLD TRADE CENTER

TITLE: CORE COLUMN REINFORCING FL. 98-106

DATE: 12-1-71

REVISIONS

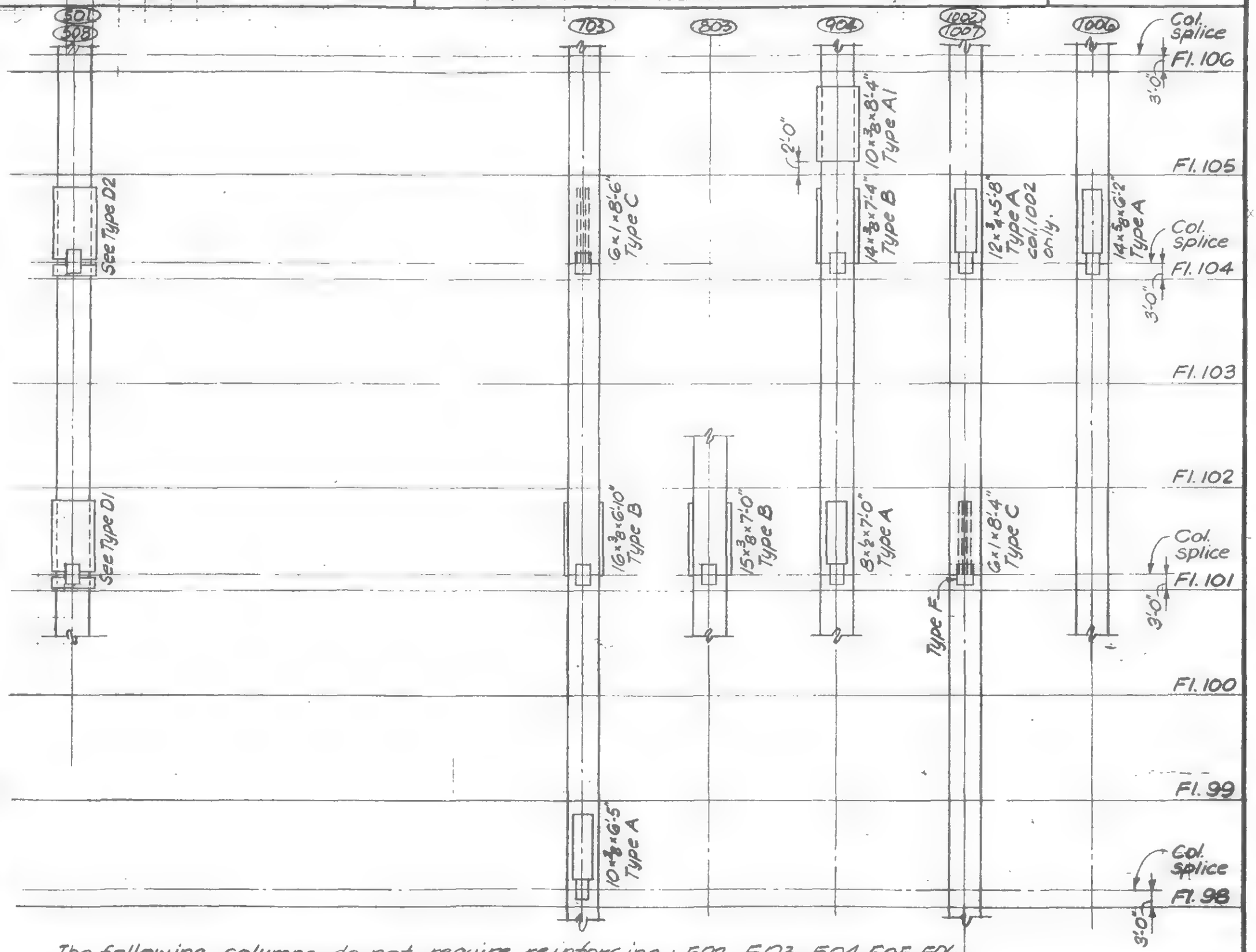


The following columns do not require reinforcing: 502, 503, 504, 505, 506, 507, 601, 602, 603, 604, 605, 606, 607, 608, 701, 702, 704, 705, 706, 707, 708, 801, 802, 804, 805, 806, 807, 901, 902, 903, 905, 906, 907, 908, 1001, 1003, 1004, 1005, 1008.

LICENSED PROFESSIONAL ENGINEER — LESLIE E. ROBERTSON — No. 34360 — UNIVERSITY OF THE STATE OF NEW YORK

DESIGNED

DRAWN S.C.

REVIEWED H.R.

19-AB-974.1

SKILLING, HELLE, CHRISTIANSEN, ROBERTSON — Structural & Civil Engineers

PROJECT: THE WORLD TRADE CENTER | TITLE: BEAM REPAIR DETAIL - FL 59 & 92 - TOWER B | DATE: 10-28-70

REVISIONS

| PL NUMBER | PL SIZE | | |
|---|---|---|---|
| | Width | Thickness | Length |
| 1 | 4 1/4 | 5/8 | 5'-0" |
| 2 | 5 1/4 | 3/4 | 5'-0" |
| 3 | 3 1/4 | 3/8 | 1'-1" |

Stiffener PL Schedule

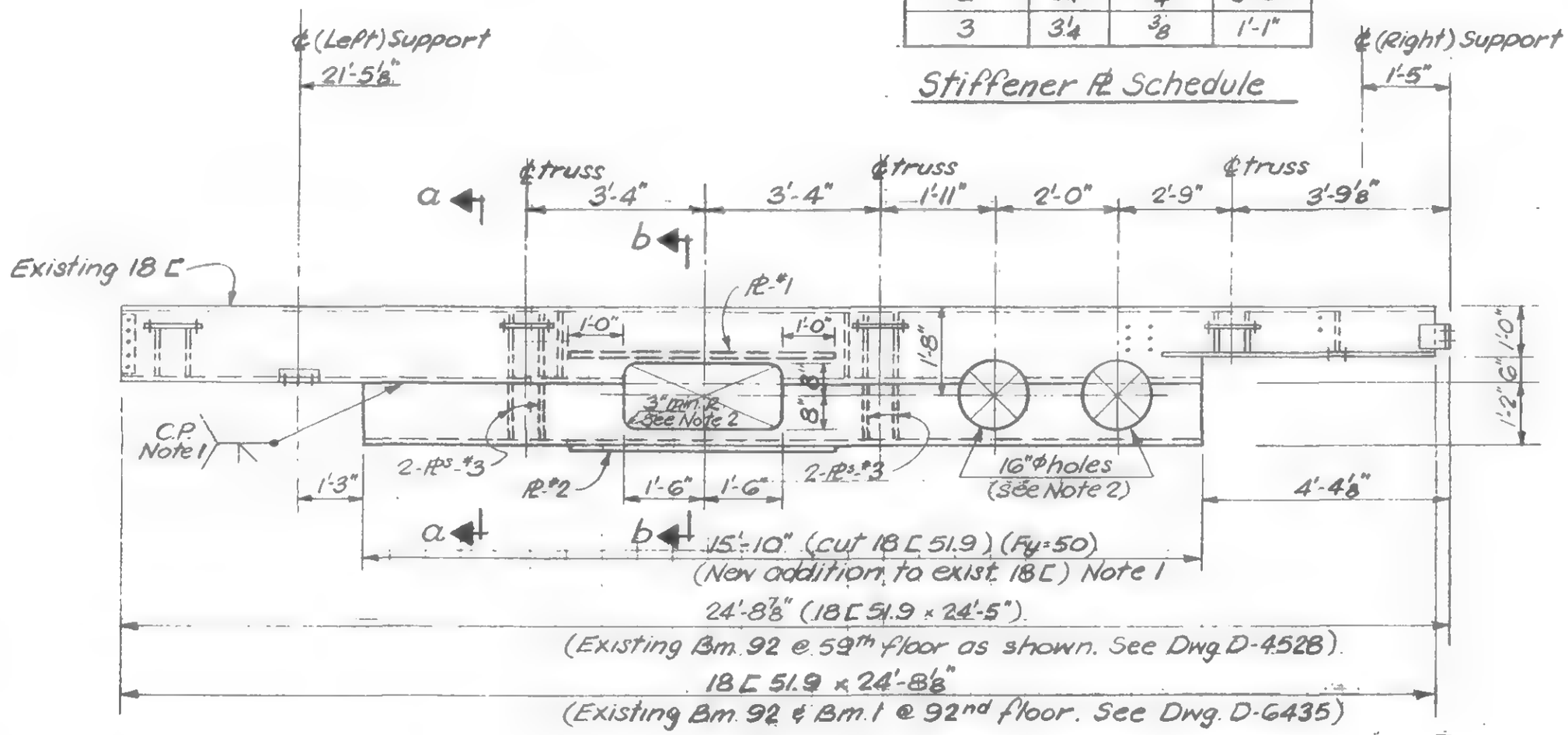


ELEVATION X-X

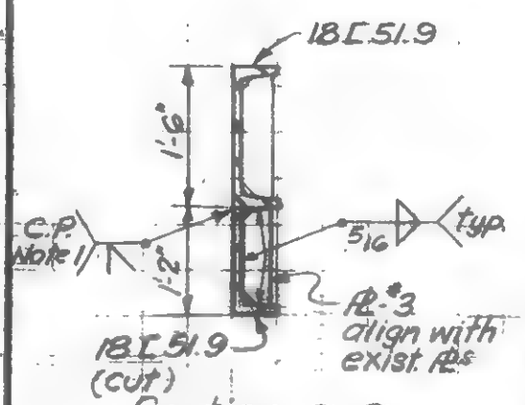


Section a-a

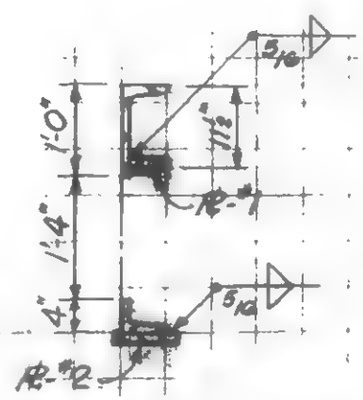


Section b-b

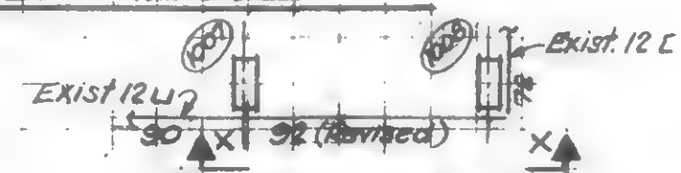


KEY PLAN - FL. 59

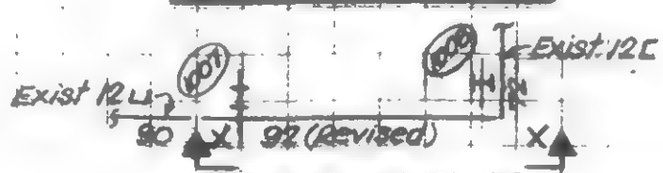


KEY PLAN - FL. 92

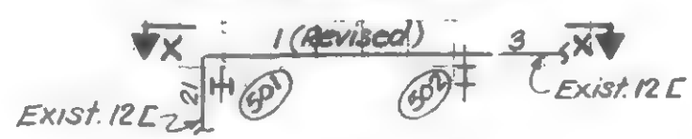


KEY PLAN - FL. 92

Notes:

1. Channel assembly to be welded before openings are cut in web.
2. Cut new holes with smooth notch-free cut surface (ASA 250)

LICENSED PROFESSIONAL ENGINEER — LESLIE E. ROBERTSON — No. 34560 — UNIVERSITY OF THE STATE OF NEW YORK

DESIGNED

DRAWN S.C.

REVIEWED

19-B-975

SKILLING, HELLE, CHRISTIANSEN, ROBERTSON — Structural & Civil Engineers

PROJECT: THE WORLD TRADE CENTER | TITLE: TEMPORARY TRUSS FL. 107–108 TOWER A | DATE: 1-7-71

REVISIONS

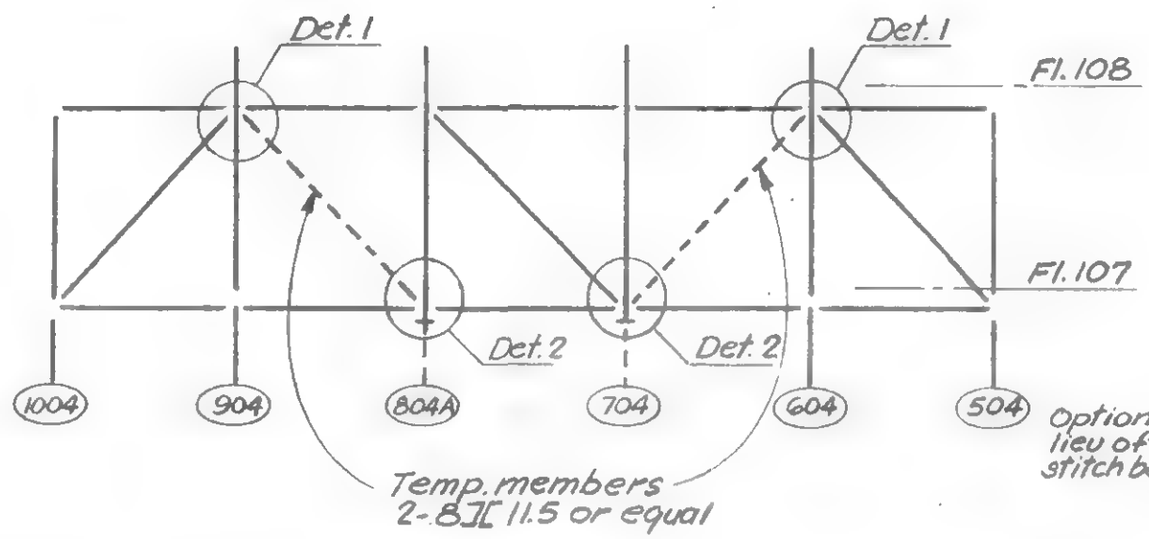


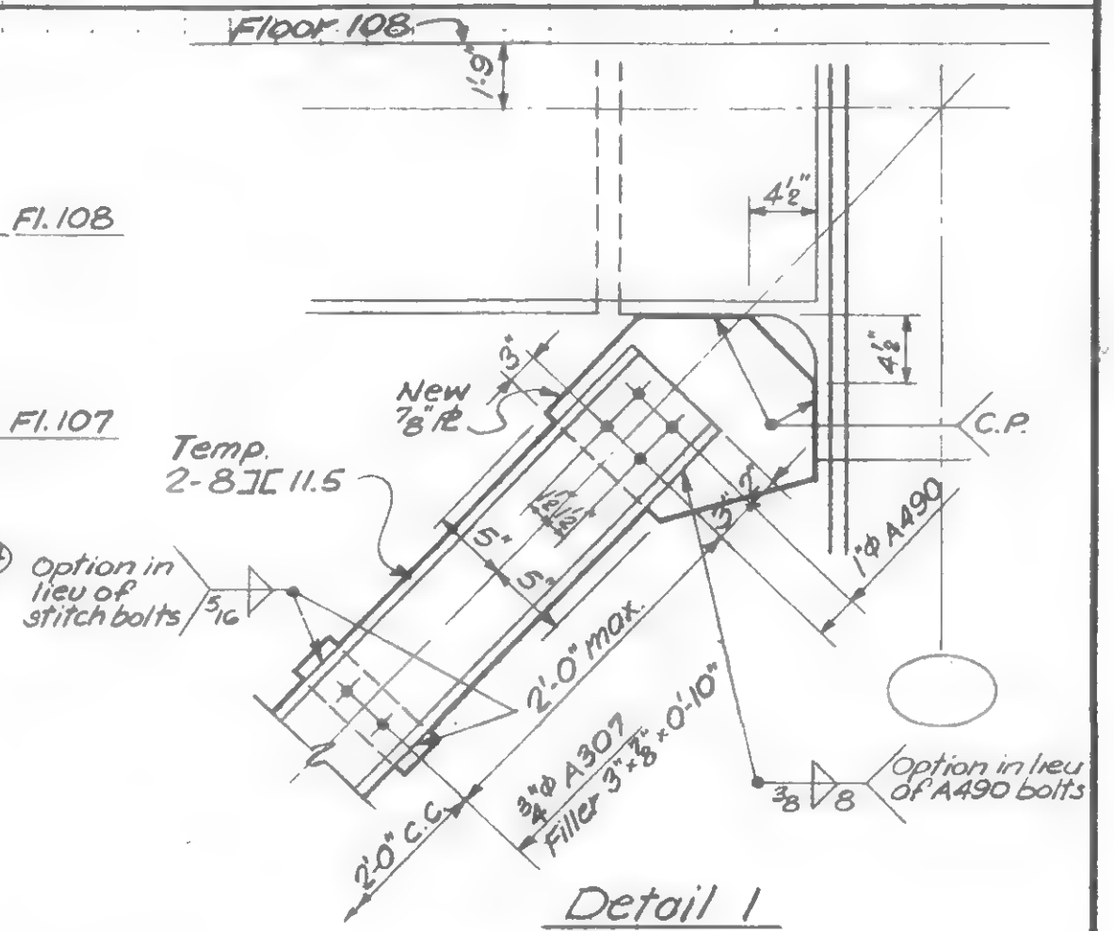


Detail 1

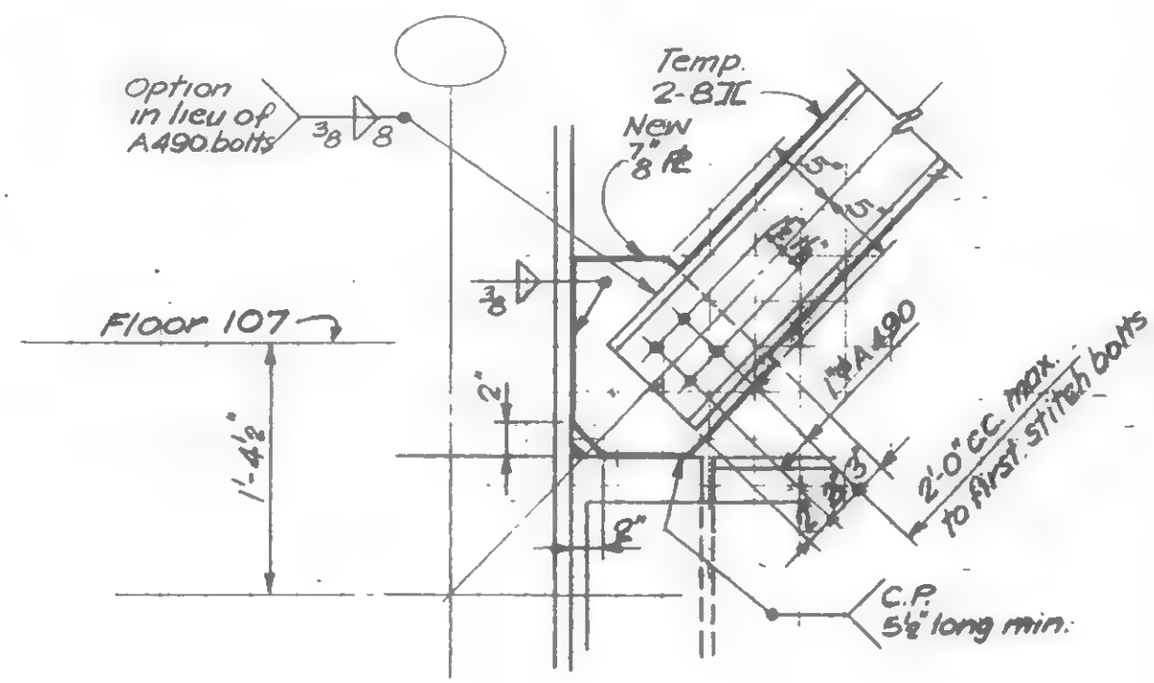


Detail 2

LICENSED PROFESSIONAL ENGINEER — LESLIE E. ROBERTSON — No 34360 — UNIVERSITY OF THE STATE OF NEW YORK

DESIGNED

DRAWN S.C.

REVIEWED

19-A-980

SKILLING, HELLE, CHRISTIANSEN, ROBERTSON — Structural & Civil Engineers

WTC 444.00

PROJECT: THE WORLD TRADE CENTER

TITLE: INDEX - FLOOR 10G REINF. FOR RESTAURANT

DATE: 10-18-7[illegible]

| Drawing Number | Status * | Latest Date or Latest Rev. Date |
|---|---|---|
| 19-A-981.0 | INDEX | 11-30-79 |
| 19-A-981.X | GENERAL NOTES | 10-15-79 |
| 19-A-982.3 | SD | 10-15-79 |
| 19-A-983.1 | SD | 4 5-9-79 |
| 19-A-983.1A | NRR | ↑ |
| 19-A-983.1B | NRR | |
| 19-A-983.1C | SD | |
| 19-A-983.1D | SD | |
| 19-A-983.2 | SD | |
| 19-A-983.2A | SD | |
| 19-A-983.3 | SD | |
| 19-A-983.3A | SD | |
| 19-A-983.4 | SD | |
| 19-A-983.4A | SD | |
| 19-A-983.5 | SD | |
| 19-A-983.6 | SD | |
| 19-A-983.7 | SD | |
| 19-A-983.8 | SD | |
| 19-A-983.9 | SD | |
| 19-A-983.10 | SD | |
| 19-A-983.11 | SD | |
| 19-A-983.12 | SD | |
| 19-A-984.1 | SD | |
| 19-A-984.2 | SD | |
| 19-A-984.3 | SD | |
| 19-A-984.4 | NRR | |
| 19-A-984.5 | SD | |
| 19-A-984.6 | NRR | |
| 19-A-984.7 | SD | 5-9-79 |
| 19-A-984.8 | SD | 11-30-79 4 |

| Drawing Number | Status * | Latest Date or Latest Rev. Date |
|---|---|---|
| 19-A-985.1 | SD | [illegible] |
| 19-A-985.2 | SD | |
| 19-A-985.3 | SD | |
| 19-A-985.4 | SD | |
| 19-A-985.5 | SD | |
| 19-A-985.6 | SD | |
| 19-A-985.7 | SD | |
| 19-A-985.8 | SD | |
| 19-A-985.9 | SD | [illegible] |
| 19-A-985.10 | SD | 11-30-79 4 |
| 19-A-986. | NRR | 5-9-79 |
| 19-A-987.1 | SD | 11-30-79 |
| 19-A-987.2 | SD | 11-30-79 |
| 19-A-987.3 | NRR | 5-9-79 |
| 19-A-987.4 | SD | 5-9-79 |
| 19-A-987.5 | SD | 11-30-79 |
| 19-A-987.6 | SD | 5-9-79 |
| 19-A-988.1 | SD | ↑ |
| 19-A-988.2 | SD | ↓ |
| 19-A-988.3 | SD | 5-9-79 4 |
| 19-A-989.1 | SD | 11-30-79 |
| 19-A-989.2 | SD | 5-9-79 |
| 19-A-989.3 | SD | 11-30-79 |
| 19-A-989.4 | SD | 5-9-79 |
| 19-A-990.1 | SD | ↑ |
| 19-A-990.2 | SD | ↓ |
| 19-A-990.3 | SD | 5-9-79 |
| | | 4 |
| SA-114 | SD | 11-30-79 |
| SCA-108 | SD | 10-5-79 |
| SCA-133 | SD | 10-5-79 |

REVISIONS: Gen. Rev. 5-9-79 R; 11-30-79 4

LICENSED PROFESSIONAL ENGINEER — LESLIE E. ROBERTSON — No 34360 — UNIVERSITY OF THE STATE OF NEW YORK

SIGNED

DRAWN: [illegible]

REVIEWED: WAB

* SD = See drawing ; NRR = No reinforcing required or no new reinforcing required
Note: Details indicate thus 988A are to be performed under this contract WTC 444.00. Details indicated otherwise have been previously installed or are not required.

19-A-981.0

SKILLING, HELLE, CHRISTIANSEN, ROBERTSON — Structural & Civil Engineers

WTC 444.00 & 444.01

PROJECT THE WORLD TRADE CENTER | TITLE GENERAL NOTES - FLOOR 106 | DATE 5-9-79

REVISIONS

Pr ed 10/5/79

10/15/79

Codes

1. Building Code for the City of New York.
2. AISC "Specification for the Design, Fabrication, and Erection of Structural Steel for Buildings.
3. Structural Welding Code AWS D1.1-Rev. 2-77.
4. ACI 318-77 "American Concrete Institute Standard Building Code Requirements for Reinforced Concrete".

Site

1. Dimensions shown in the Drawings are correct to the best of the knowledge of the Engineer. However, the Contractor shall verify all dimensions by field measurements prior to installing any material. For material fabricated to fit within restricted dimensions, field dimensions shall be verified prior to fabrication and shall be shown in the shop detail drawings. Shop drawings shall be submitted for approval to the PANYNJ.
2. The length of new members which can be delivered to their various locations is generally limited to 15 feet. The Contractor shall familiarize himself with the site and, where field splicing of members is required, they shall be shown in the shop detail drawings.

Structural Steel

1. All steel shall be ASTM A36 or another weldable steel included in paragraph 1.4.1.1 of AISC Specifications.
2. All bolted connections shall be made with A325-F bolts.
3. Flags are used to convey end reactions and/or details.

   26/ indicates a connection detail meeting AISC requirements for 26 kips.

   985A/ indicates a detail is shown in page 19-A-985. When reactions are indicated, the connection is to be provided as above.
4. Electrodes, flux and shielding gas shall conform to AWS A5.1-69, AWS A5.17-69 or AWS A5.20-69 as applicable and shall provide physical properties after welding equivalent to or better than E7018 low hydrogen electrodes. Drying or redrying of low hydrogen electrodes shall be performed at a temperature between 700 and 800 degrees Fahrenheit for not less than one hour.
5. If parts to be joined with fillet welds cannot be brought into direct contact, the fillet weld shall be increased in size above that indicated in the drawing. The increase in size shall be equal to or greater than the gap.
6. Remove spray fireproofing as required. Spray fireproof all added steel and replace spray fireproofing on existing steel.

Reinforced Concrete

1. Concrete
   A. Concrete shall be f'c = 4,000 psi made with normal weight aggregate.
   B. Concrete which is to be adjacent to existing concrete shall have mixes designed and proportioned to produce minimum practicable shrinkage.
   C. Where concrete is to be cast against existing concrete, the existing concrete shall be cleaned and completely coated with an approved epoxy bonding agent prior to casting new concrete.
2. Reinforcing Steel
   A. All reinforcing steel shall be deformed bars conforming to ASTM A615, Grade 60 unless otherwise noted in the Drawings.
   B. Detailing of all reinforcing steel shall conform to "ACI Manual of Standard Practice for Detailing Reinforced Concrete Structures — (ACI 315-74)".

SIGNED

DRAWN

REVIEWED W. Brewer

19-A-981.X

SKILLING, HELLE, CHRISTIANSEN, ROBERTSON — Structural & Civil Engineers

PROJECT: THE WORLD TRADE CENTER | TITLE: FL 106 - CONNECTION DETAILS | DATE: 1/7/71

REVISIONS

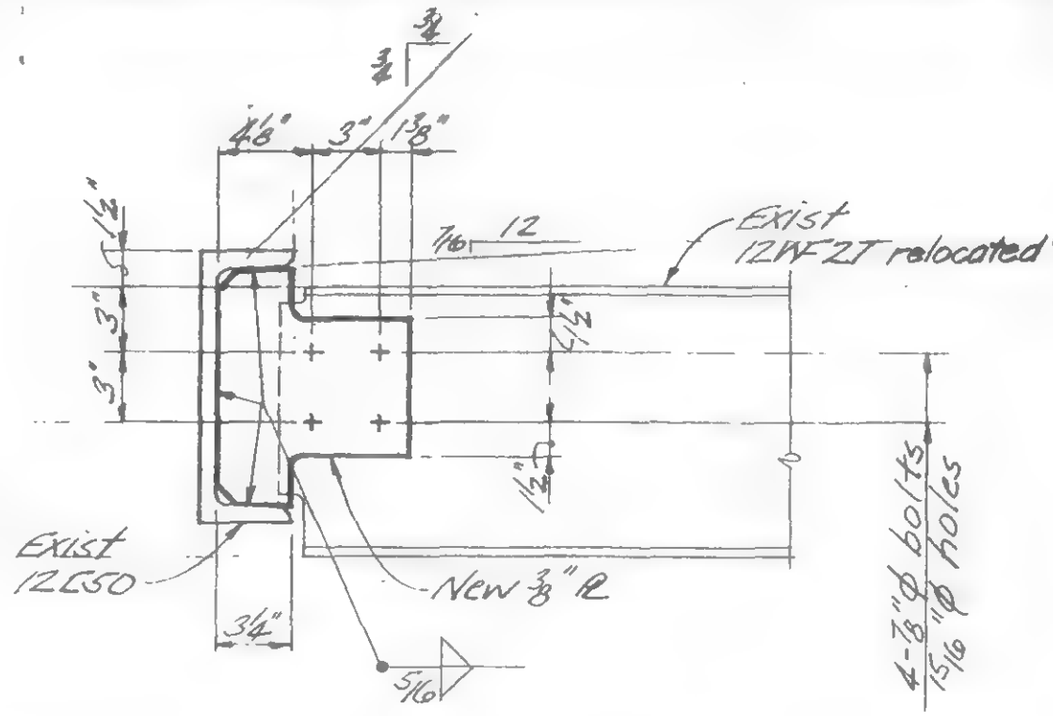


Detail 106A

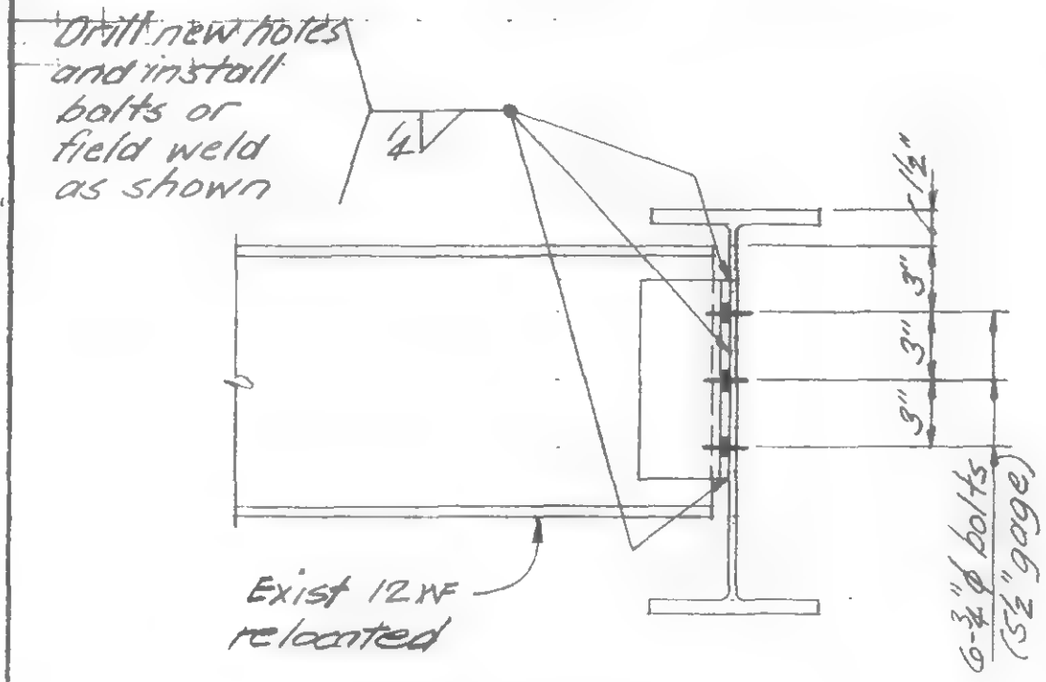


Detail 106B

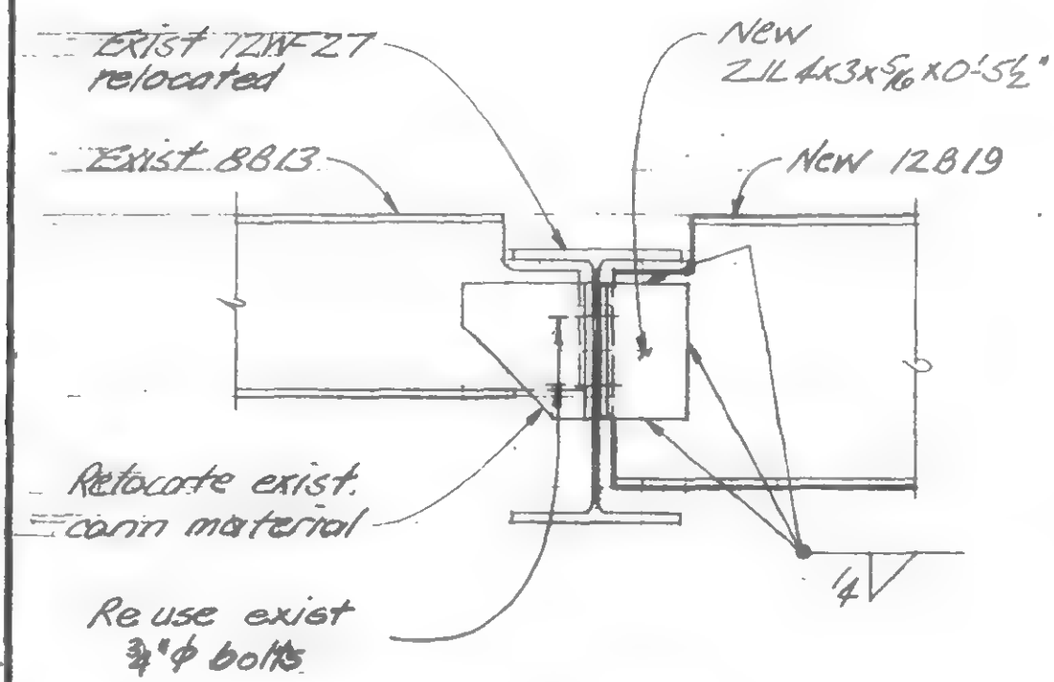


Detail 106C

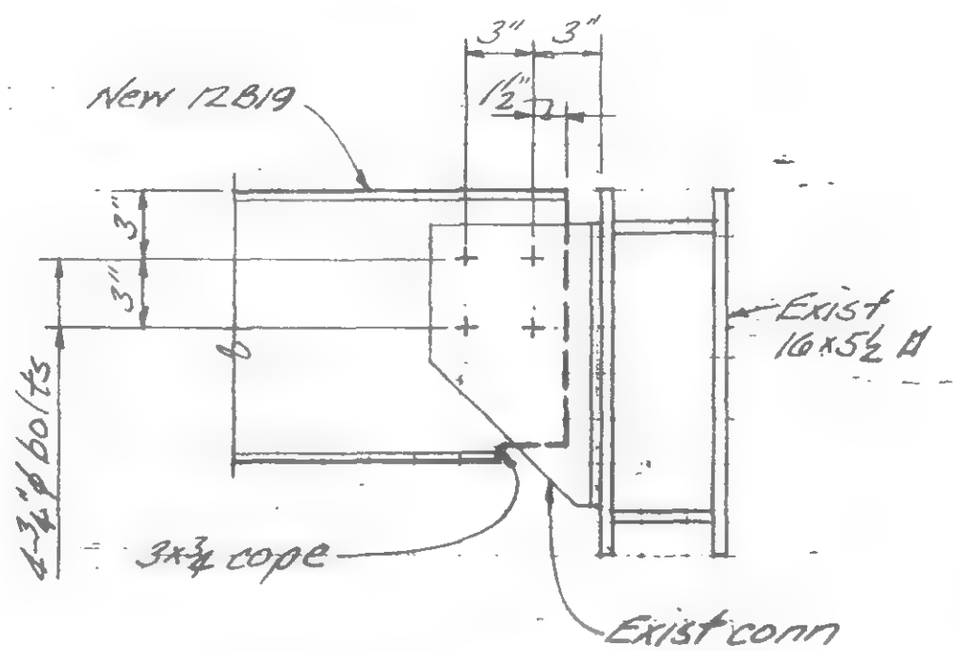


Detail 106D

DESIGNED

DRAWN J. Adams

REVIEWED

19-A-98A1

SKILLING, HELLE, CHRISTIANSEN, ROBERTSON — Structural & Civil Engineers

PROJECT: THE WORLD TRADE CENTER | TITLE: Fl. 106 - CONNECTION DETAILS | DATE: 1/7/71

REVISIONS

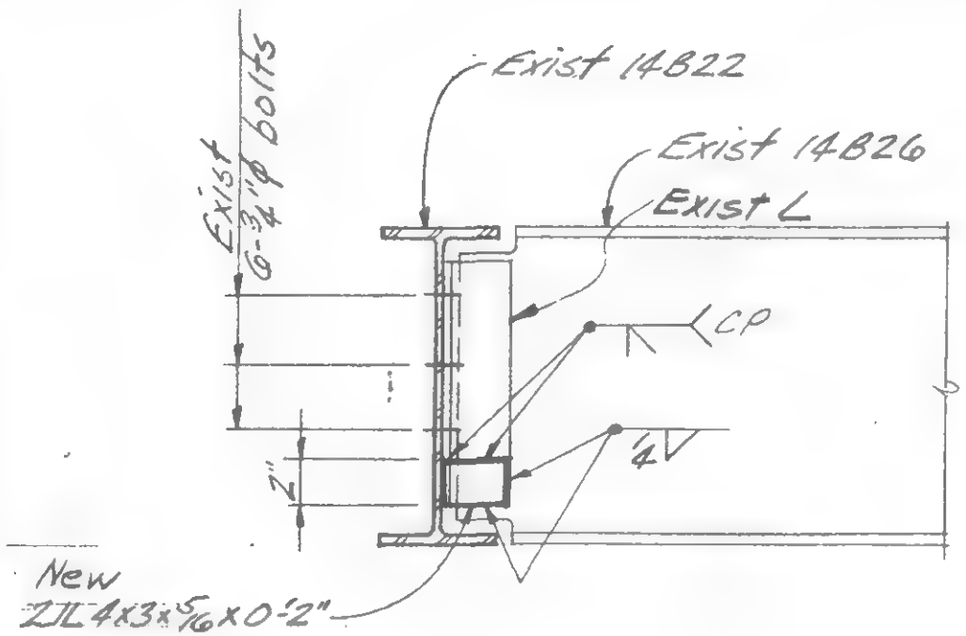


Detail 106E

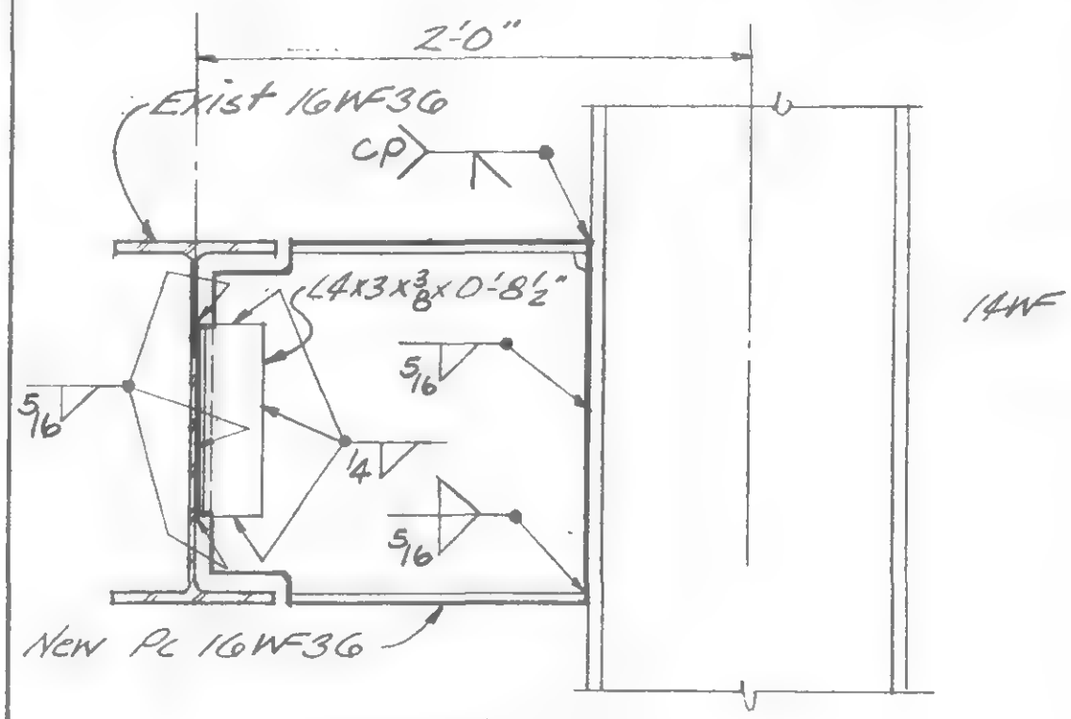


Detail 106F

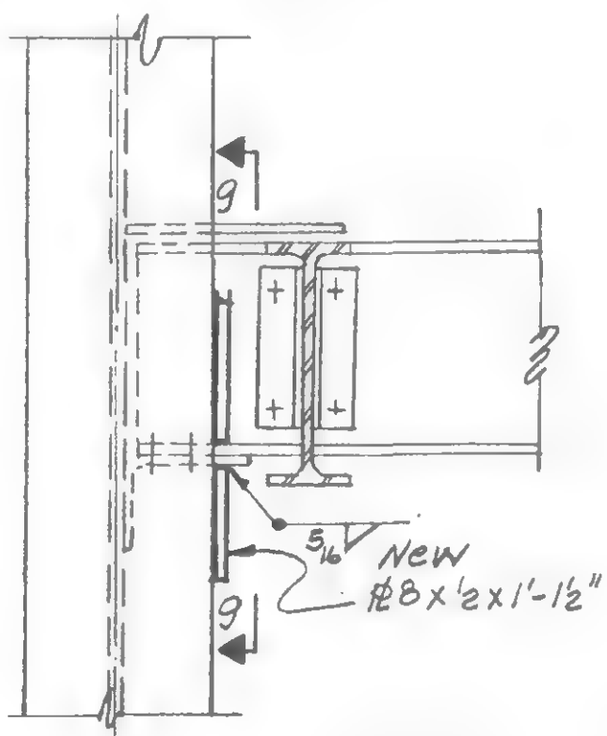


Detail 106G

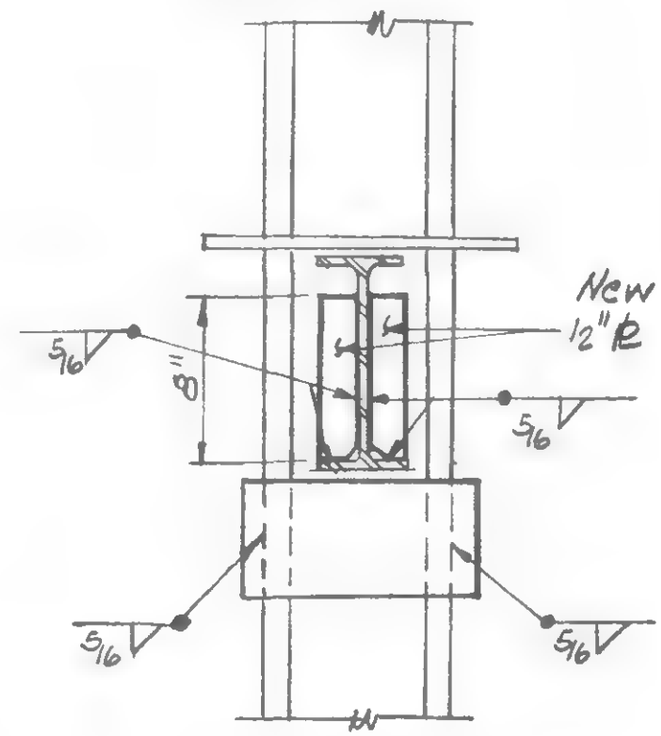


Section 9-9

LICENSED PROFESSIONAL ENGINEER LESLIE E. ROBERTSON No 34360 UNIVERSITY OF THE STATE OF NEW YORK

SIGNED

DRAWN J. Hrams

REVIEWED

19-A-981.2

SKILLING, HELLE, CHRISTIANSEN, ROBERTSON — Structural & Civil Engineers

PROJECT: THE WORLD TRADE CENTER | TITLE: FL. 106 CONNECTIONS | DATE: 1-7-71

REVISIONS

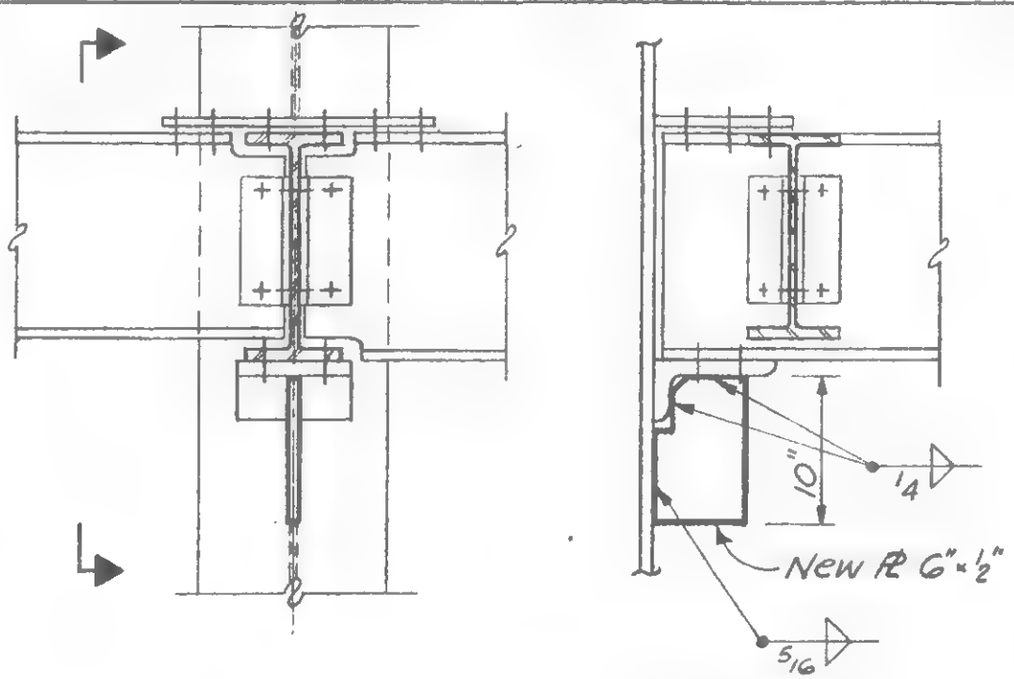


Section

DETAIL 106 H

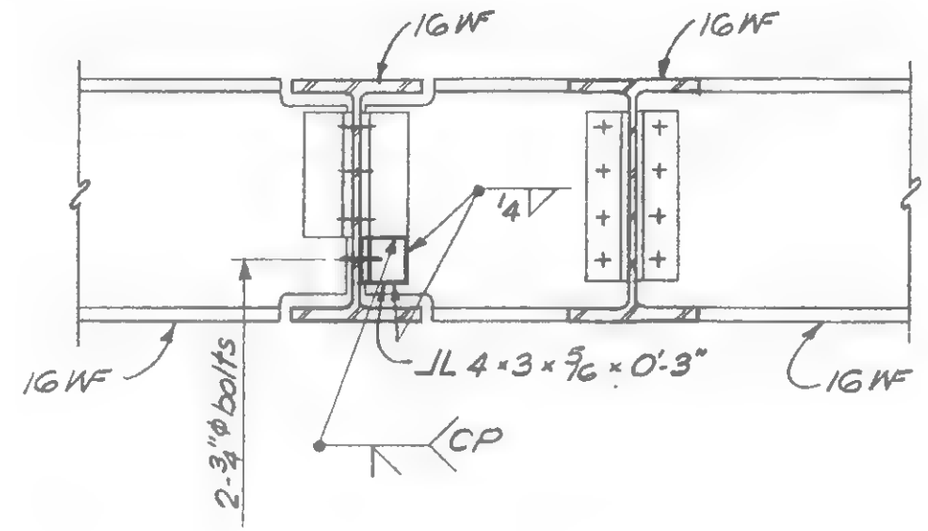


DETAIL 106 K

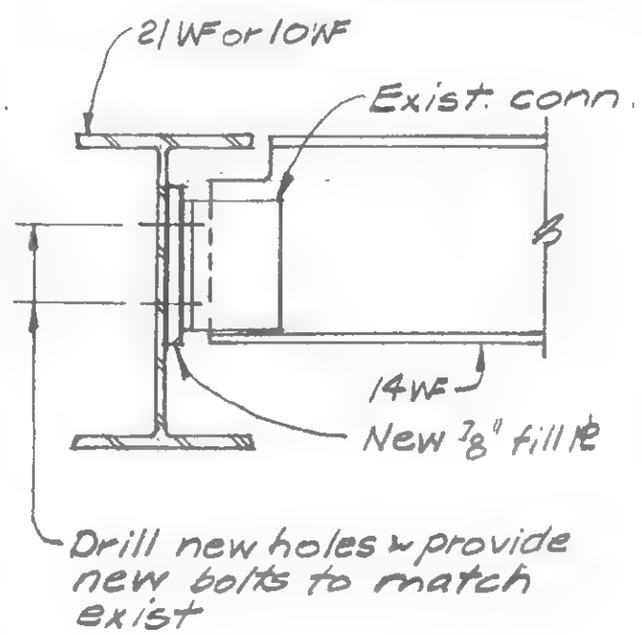


DETAIL 105A

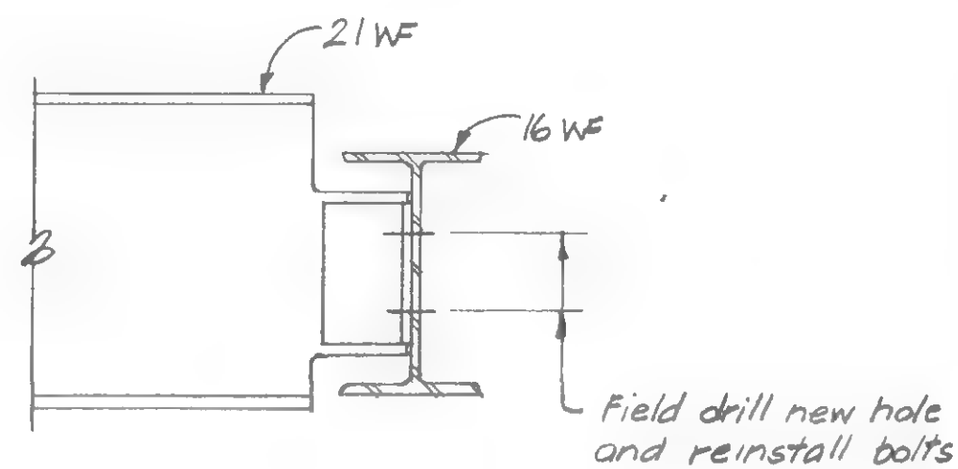


DETAIL 105 B

LICENSED PROFESSIONAL ENGINEER — LESLIE E. ROBERTSON — No 34360 — UNIVERSITY OF THE STATE OF NEW YORK

IGNED

DRAWN S.C.

REVIEWED

19-A-981.3

SKILLING, HELLE, CHRISTIANSEN, ROBERTSON — Structural & Civil Engineers

PROJECT: THE WORLD TRADE CENTER | TITLE: Fl. 106 - BEAM COVER PL | DATE: 1/7/71

REVISIONS

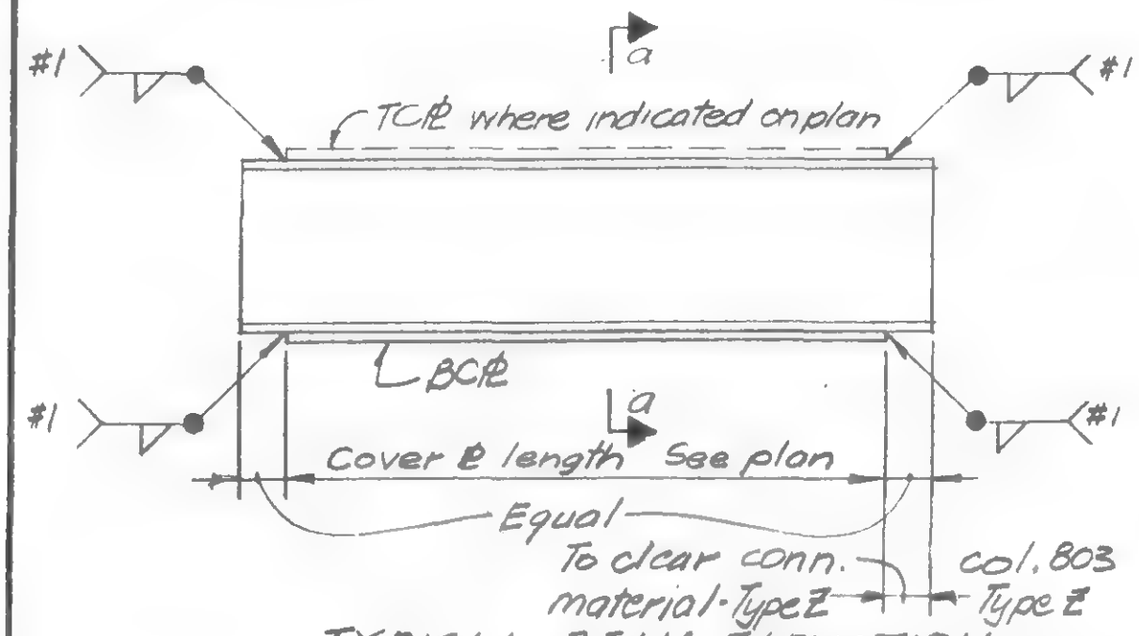


TYPICAL BEAM ELEVATION

BEAM ELEVATION TYPE Z (as noted)

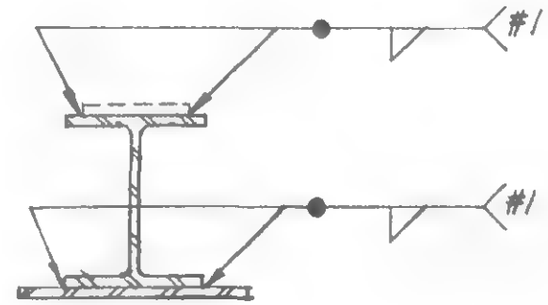


Section a-a

| WELD #1 SCHEDULE | |
|---|---|
| COVER PL THICKNESS | WELD #1 |
| 3/8 & 1/2 | 1/4 |
| 3/4 & 7/8 | 5/16 |
| 1 1/4 | 3/8 |

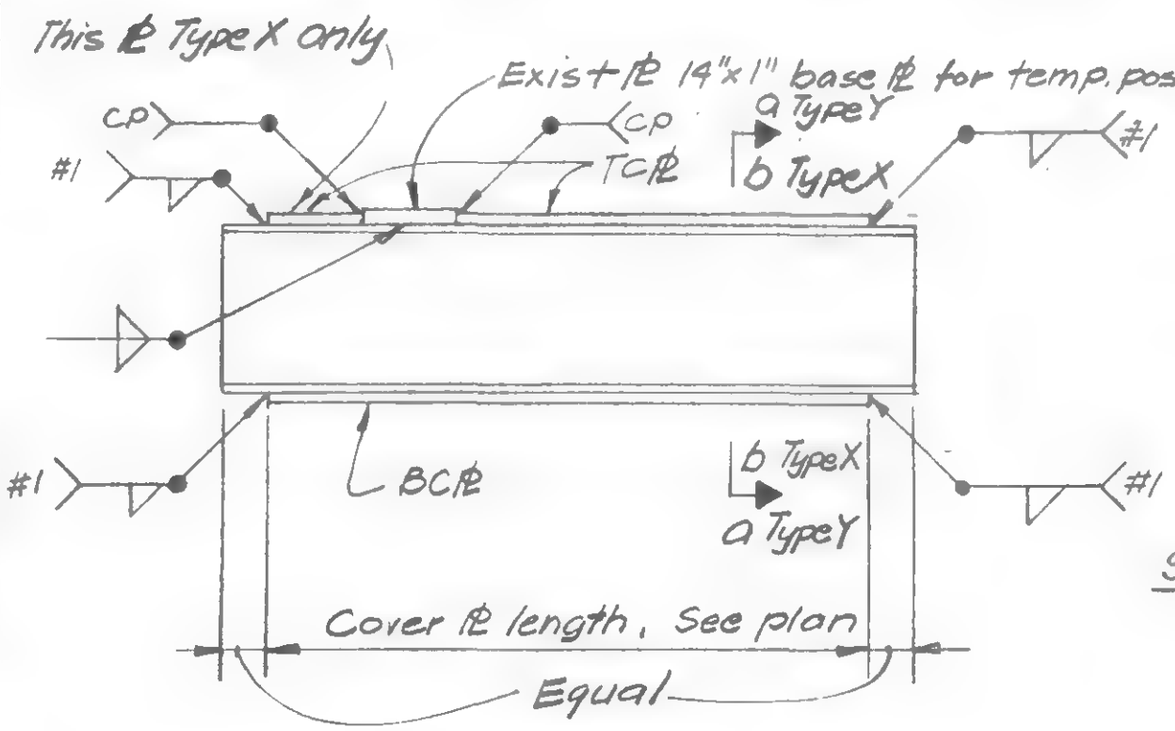


BEAM ELEVATION - TYPE X & Y

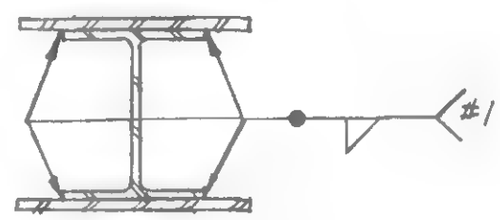


Section b-b

LICENSED PROFESSIONAL ENGINEER LESLIE E. ROBERTSON No 34360 UNIVERSITY OF THE STATE OF NEW YORK

SIGNED

DRAWN P. Orehi

REVIEWED

B-A-982.1

SKILLING, HELLE, CHRISTIANSEN, ROBERTSON — Structural & Civil Engineers

PROJECT: THE WORLD TRADE CENTER | TITLE: FL. 106 BEAM COVER PL | DATE: 1/7/71

REVISIONS

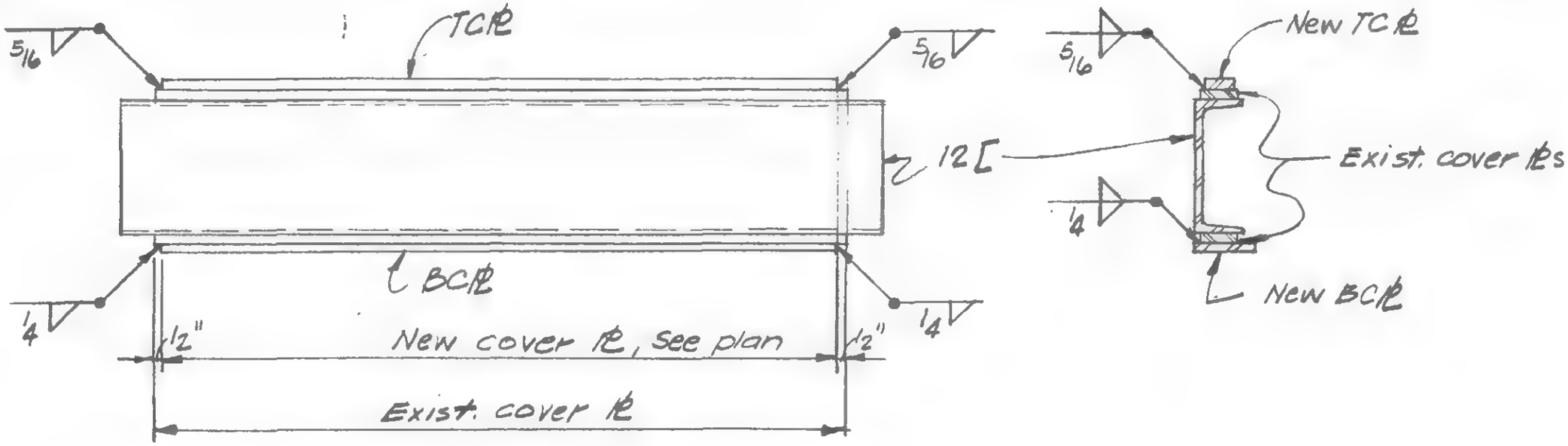


BEAM ELEVATION TYPE W

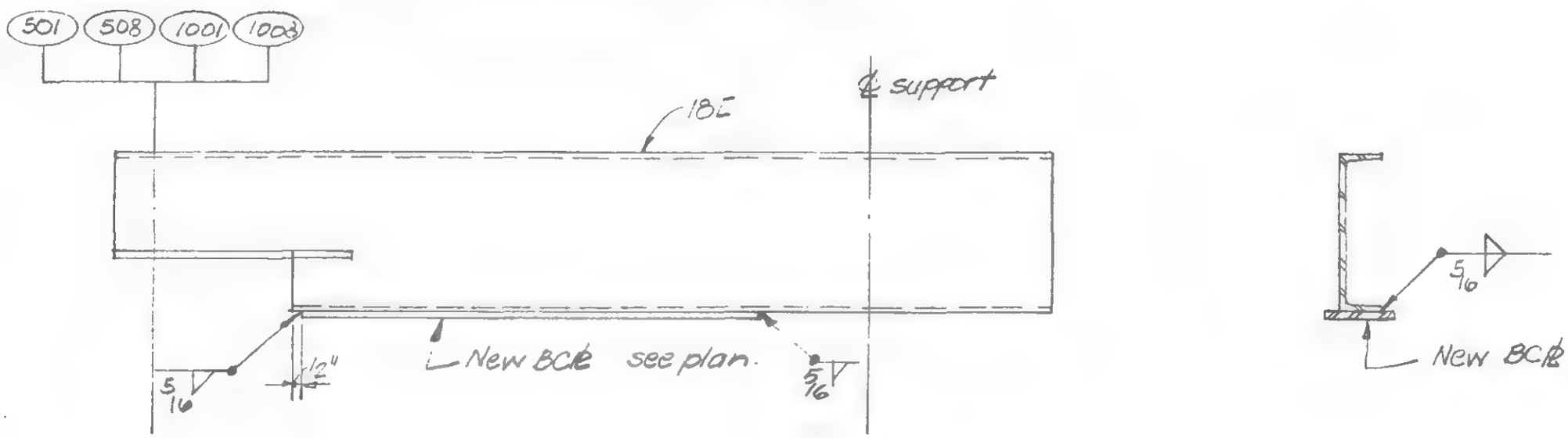


TYPE V

LICENSED PROFESSIONAL ENGINEER LESLIE E. ROBERTSON No 34360 UNIVERSITY OF THE STATE OF NEW YORK

SIGNED

DRAWN P. Orelli

REVIEWED

19-A-982.2

SKILLING, HELLE, CHRISTIANSEN, ROBERTSON — Structural & Civil Engineers

PROJECT: THE WORLD TRADE CENTER

TITLE: DUMBWAITER PIT DETAILS - FL. 106

DATE: 5-9-79

WTC 444.00/444.01

VISIONS

1/15/79 2

10/15/79 3

A

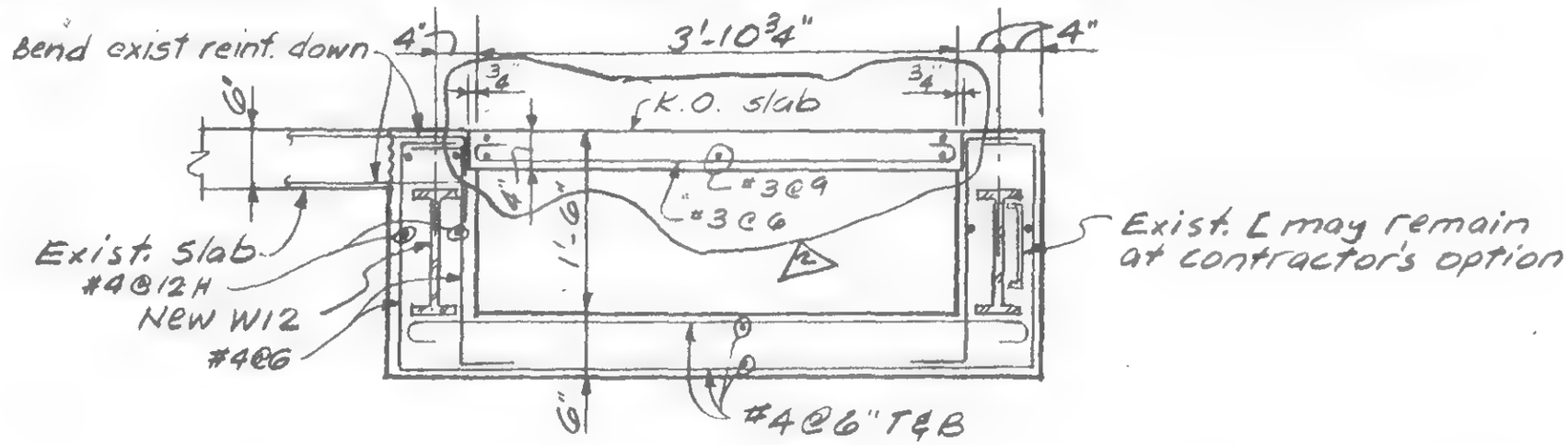


B

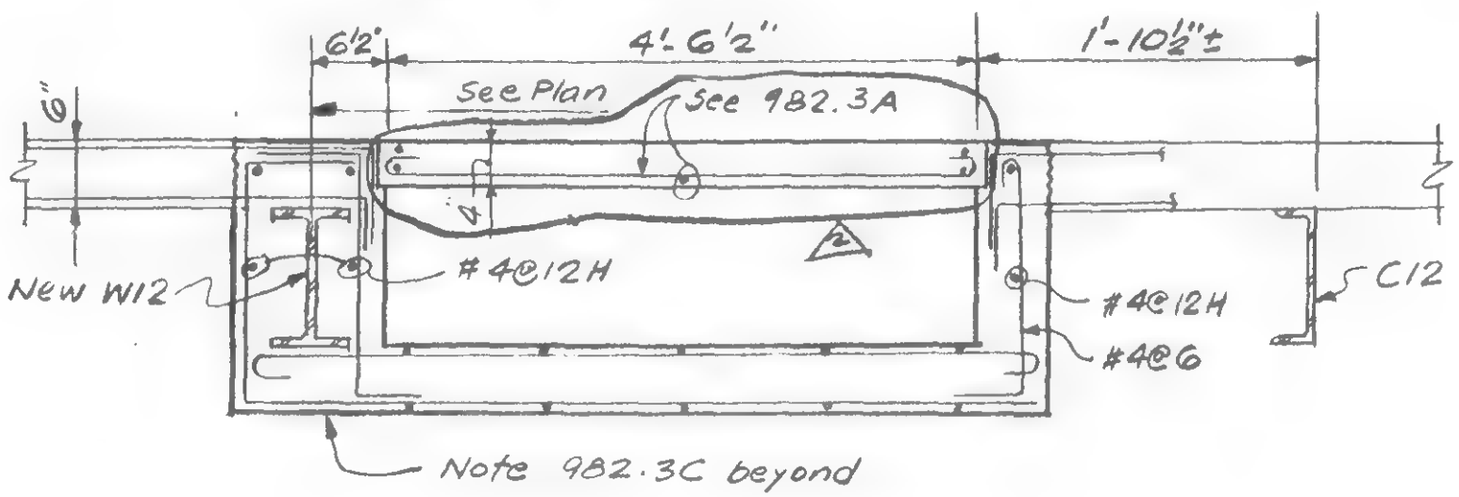


C

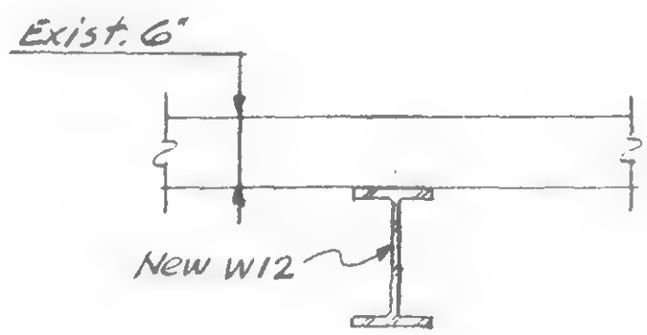


D

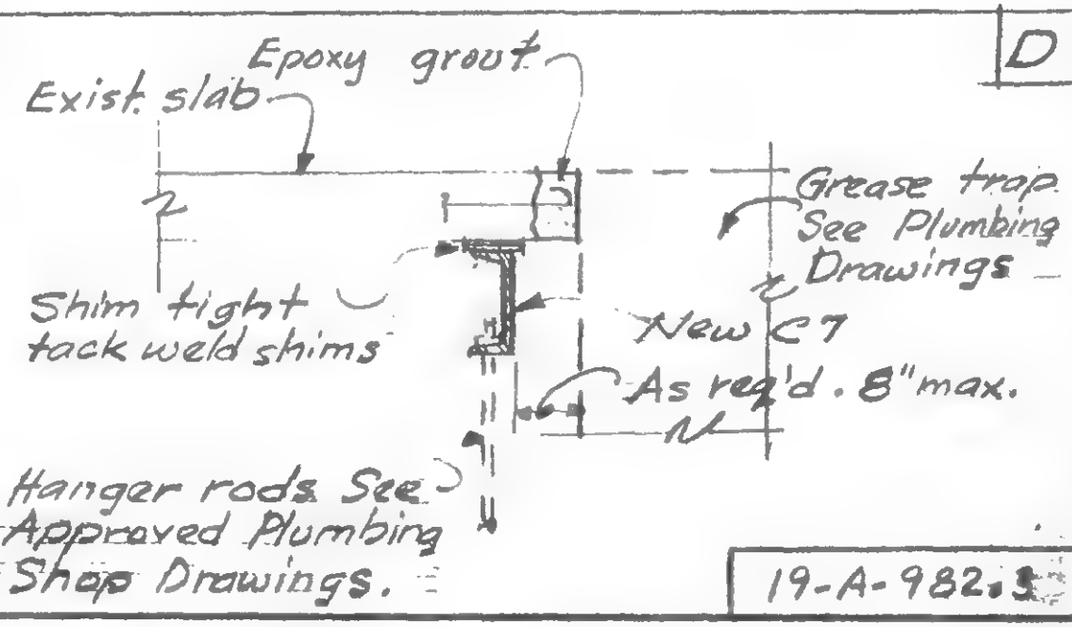


19-A-982.3

LICENSED PROFESSIONAL ENGINEER — LESLIE E. ROBERTSON — No. 34360 — UNIVERSITY OF THE STATE OF NEW YORK

CHKD

DRAWN

REVIEWED WEOB

| | |
|---|---|
| 7/30/71 | |
| 10/6/71 | |
| 5/9/79 | |

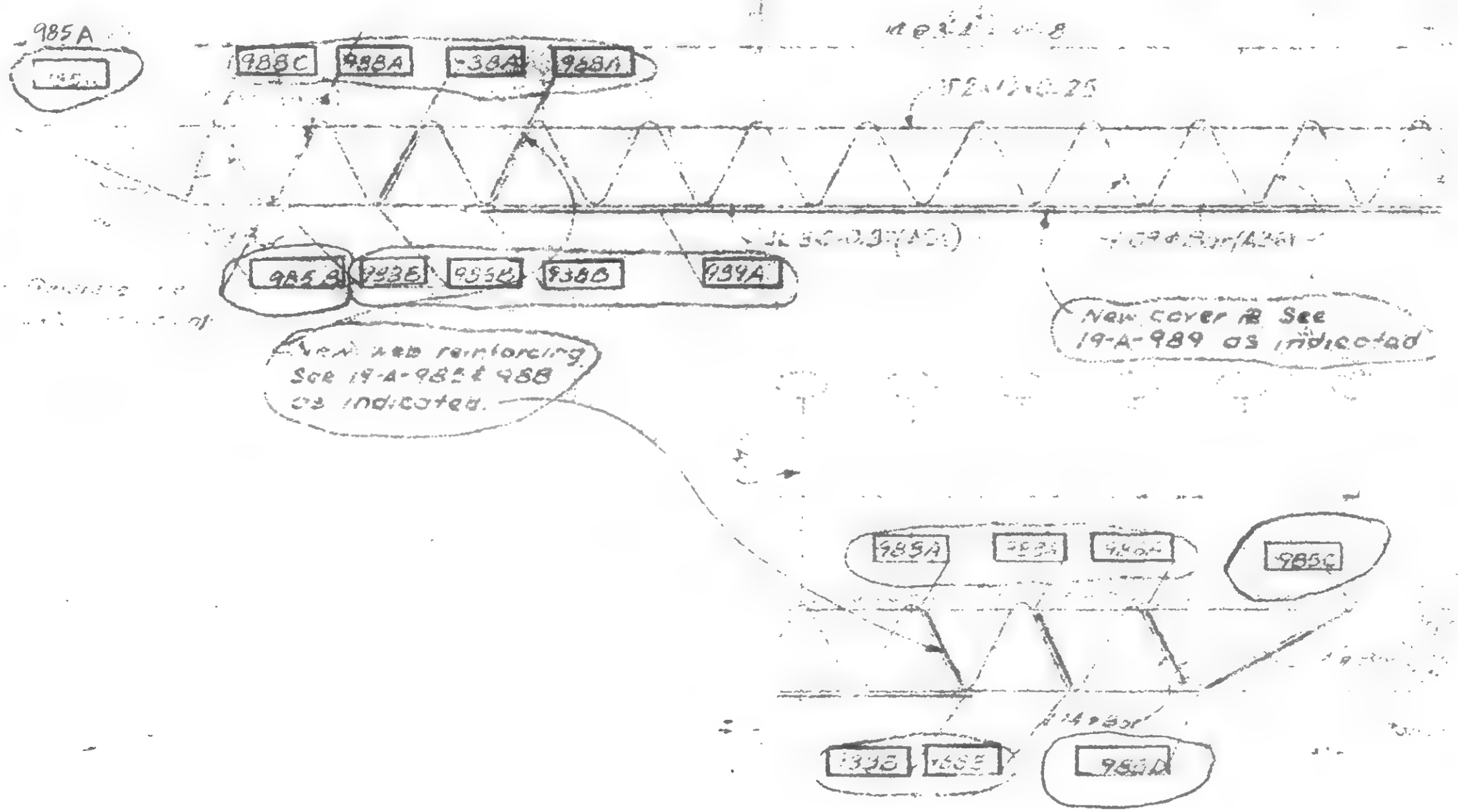


19-A-983.1

SKILLING, HELLE, CHRISTIANSEN, ROBERTSON — Structural & Civil Engineers

PROJECT: TWO WORLD TRADE CENTER | TITLE: FLOOR TRUSS (C32T) – Fl. 106 | DATE: 1-7-71

| REVISIONS |
|---|
| 1/27/71 |
| 7/30/71 |
| Printed 10/6/71 |
| 5/9/79 |

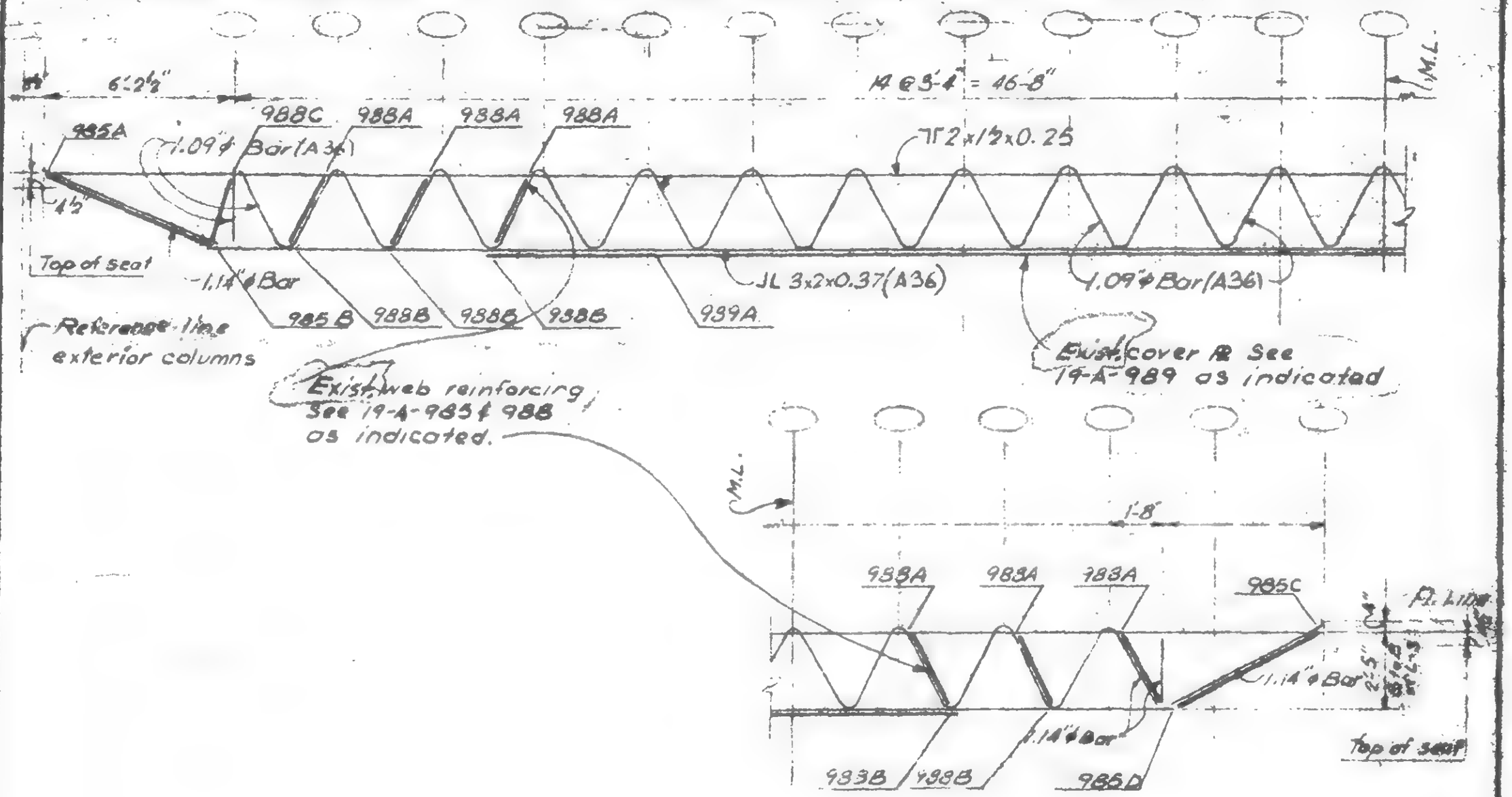

DESIGNED

DRAWN

19-A-985 (1/4)

SKILLING, HELLE CHRISTIANSEN, ROBERTSON — Structural & Civil Engineers

PROJECT: THE WORLD TRADE CENTER | TITLE: FLOOR TRUSS C 32 T1 – Fl. 106 | DATE: 1-7-71

REVISIONS
1/27/71
7/30/71
Printed 10/20/71
5/9/79

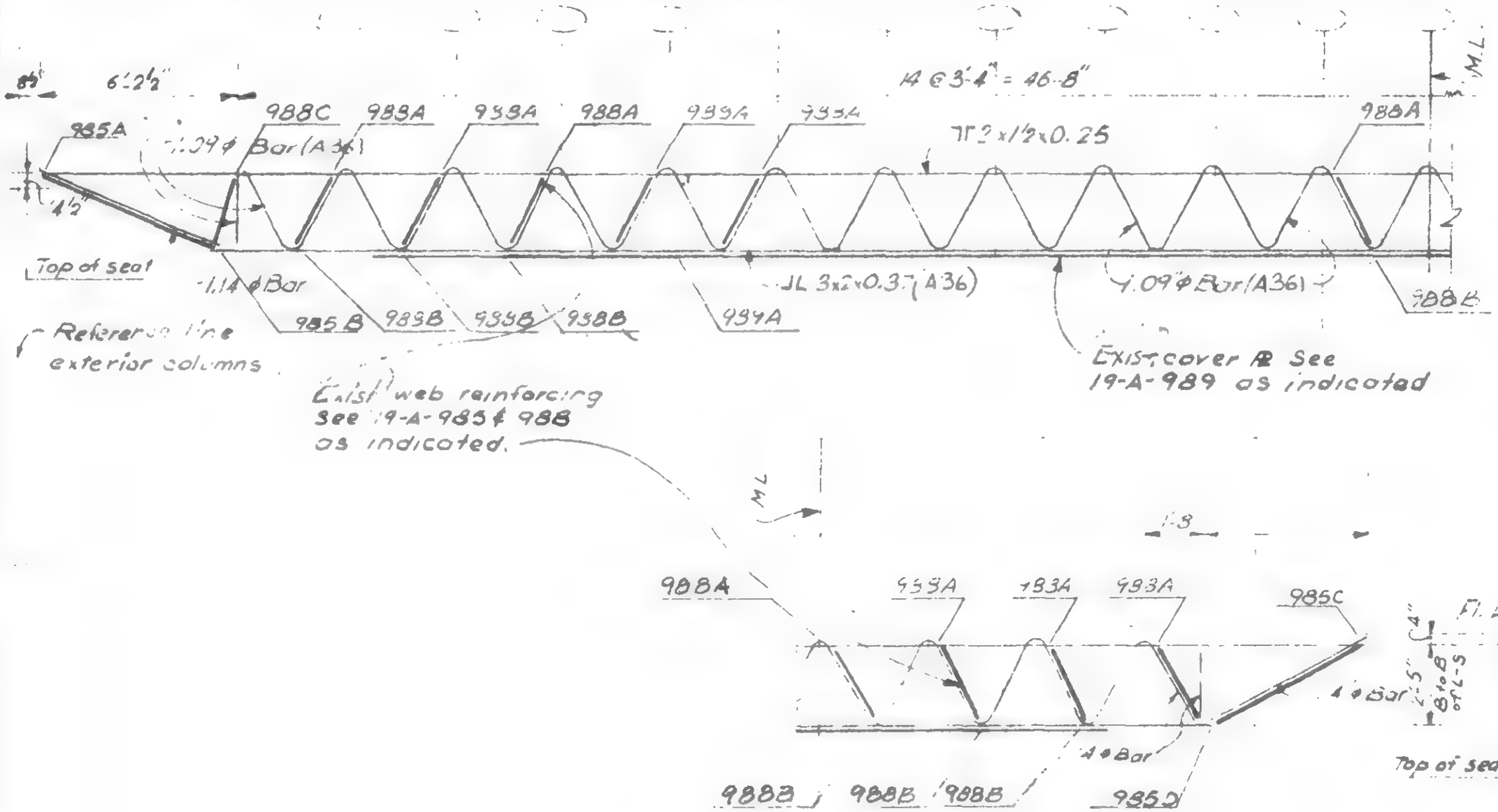


LICENSED PROFESSIONAL ENGINEER — LESLIE E. ROBERTSON — No. 34360 — UNIVERSITY OF THE STATE OF NEW YORK

DESIGNED

DRAWN

REVIEWED

19-A-983-1B

SKILLING, HELLE, CHRISTIANSEN, ROBERTSON — Structural & Civil Engineers

PROJECT: THE WORLD TRADE CENTER | TITLE: FLOOR TRUSS C 32 T1 – Fl. 106 | DATE: 5-9-79

REVISIONS

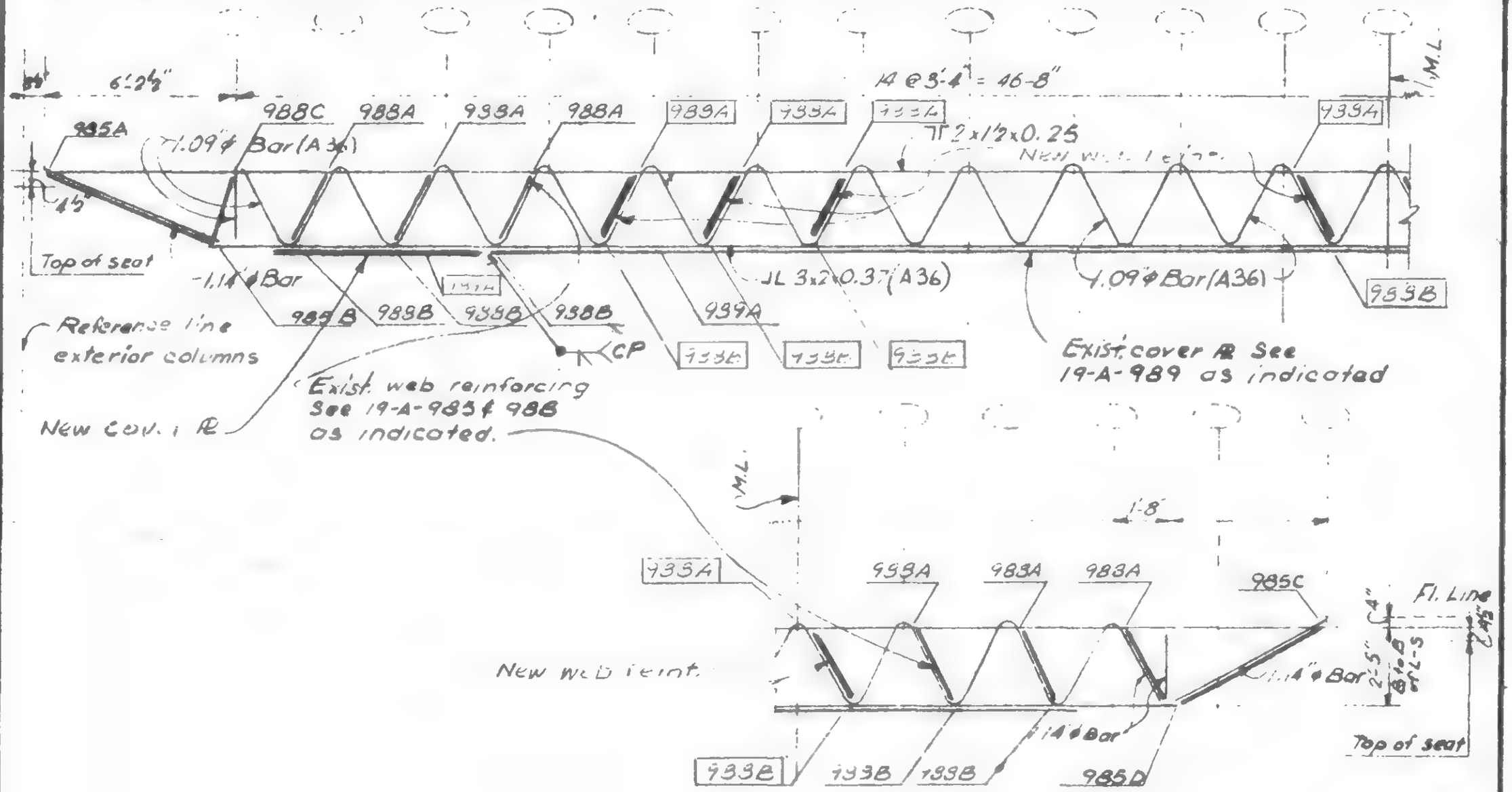


LICENSED PROFESSIONAL ENGINEER — LESLIE E. ROBERTSON — No 34360 — UNIVERSITY OF THE STATE OF NEW YORK

SIGNED

DRAWN

REVIEWED W. Brewer

19-A-983.1C

Howard Chapin Chapman Robertson Structural & Civil Engineers

THE WORLD TRADE CENTER | FLOOR TRUSS C32T1 – Fl. 106 | 5-9-79

REVISIONS

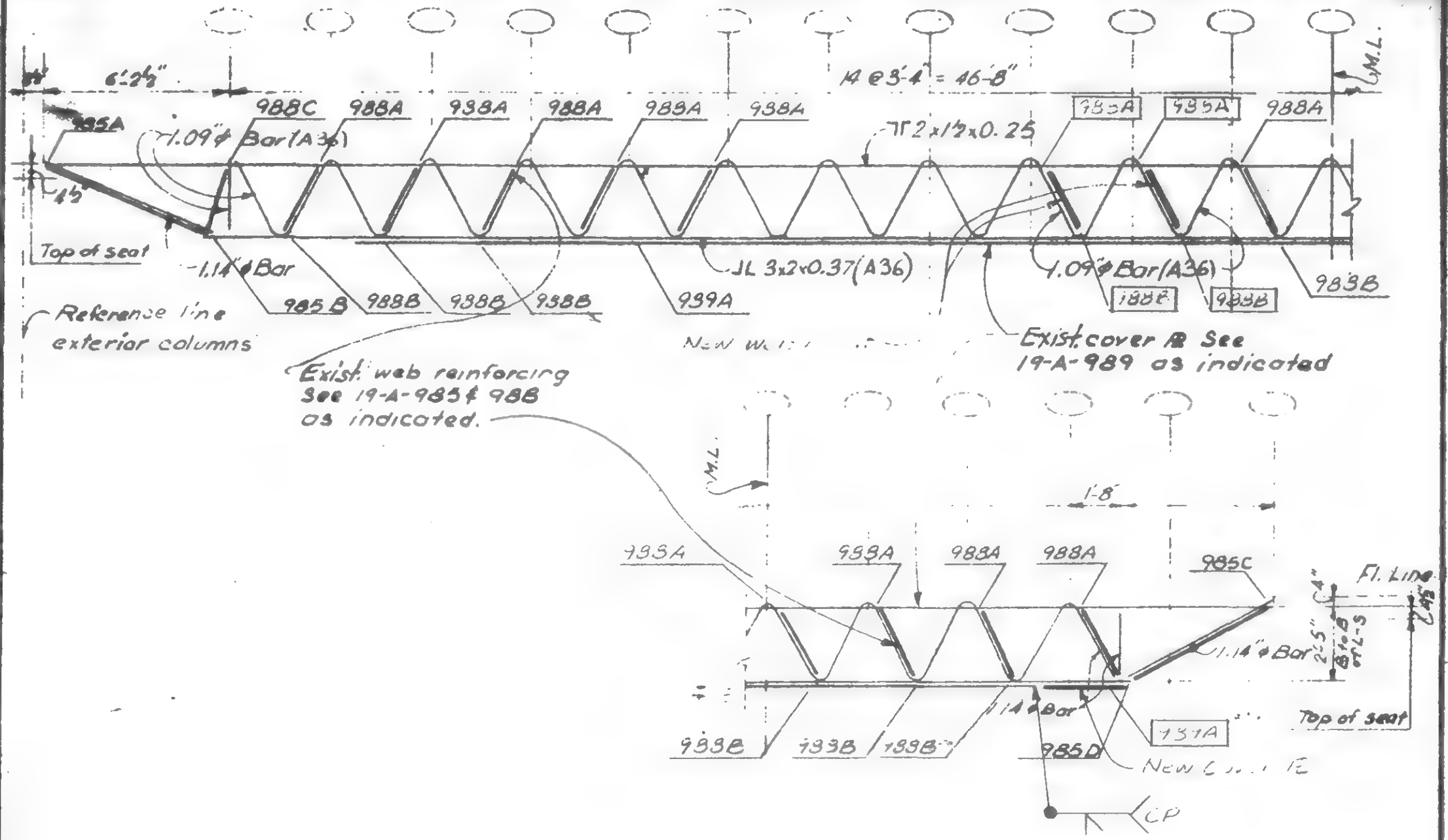

DRAWN

REVISED

19-A-983-1D

SELLING, LOVELL, CHRISTIANSEN, ROBERTSON — Structural & Civil Engineers

TRADE CENTER | FLOOR TRUSS 232 ft. - Fl. 106 | 1-7-71

REVISIONS

7/27/71
7/30/71
10/6/71
5/9/79

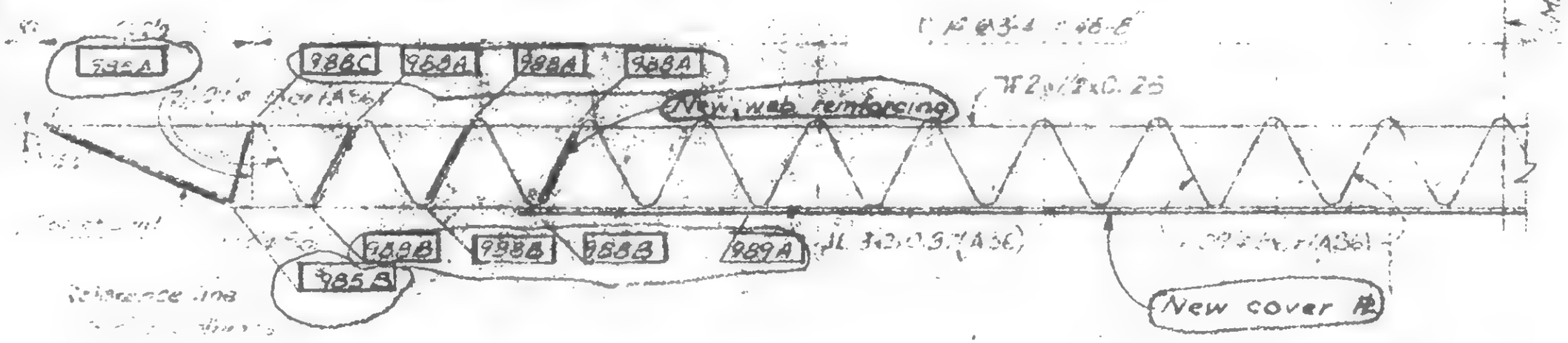


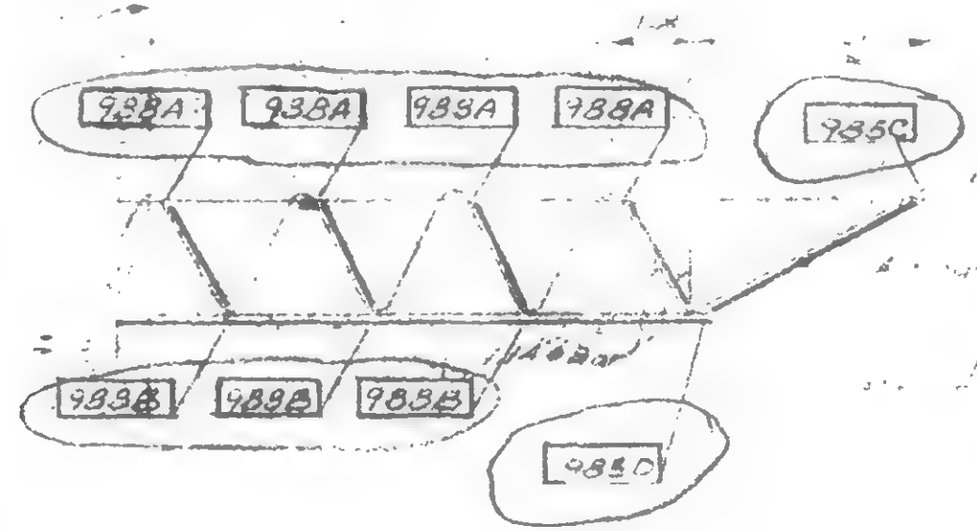


WOE

19-A-983.2

SKILLING, HELLE, CHRISTIANSEN, ROBERTSON — Structural & Civil Engineers

PROJECT: THE WORLD TRADE CENTER | TITLE: FLOOR TRUSS ℄ 32 TI. - Ft. 106 | DATE: 1-7-71

REVISIONS
1/27/71
7/30/71
Printed 10/6/71
5/9/79

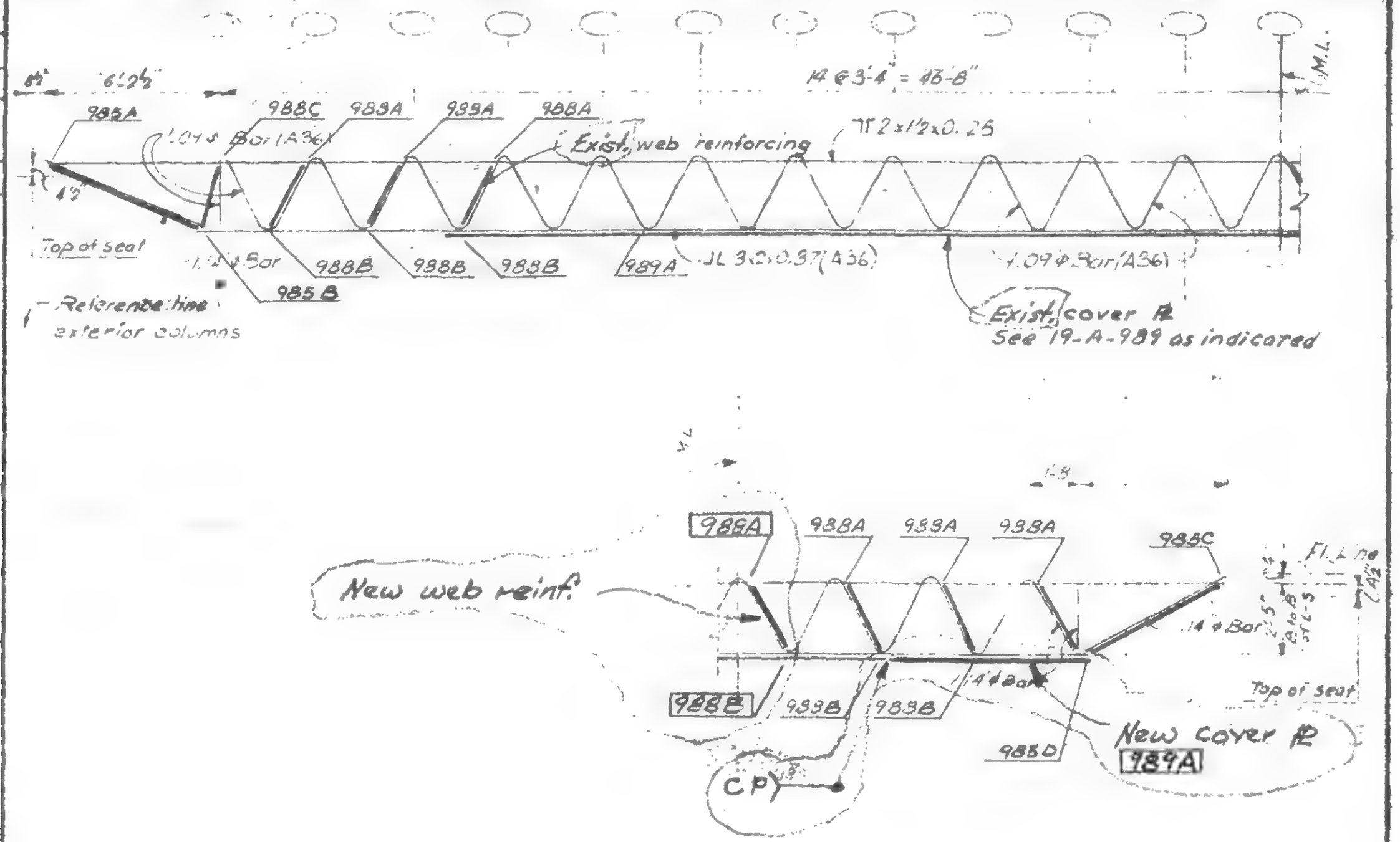

SIGNER

DRAWN

19-A-985.2A

SKILLING HELLE CHRISTIANSEN ROBERTSON Structural & Civil Engineers

WORLD TRADE CENTER | FLOOR TRUSS C2:75 - Fl. 106 | DATE 1-7-71

REVISIONS

1/27/71
7/30/71
10/6/71
5/9/79

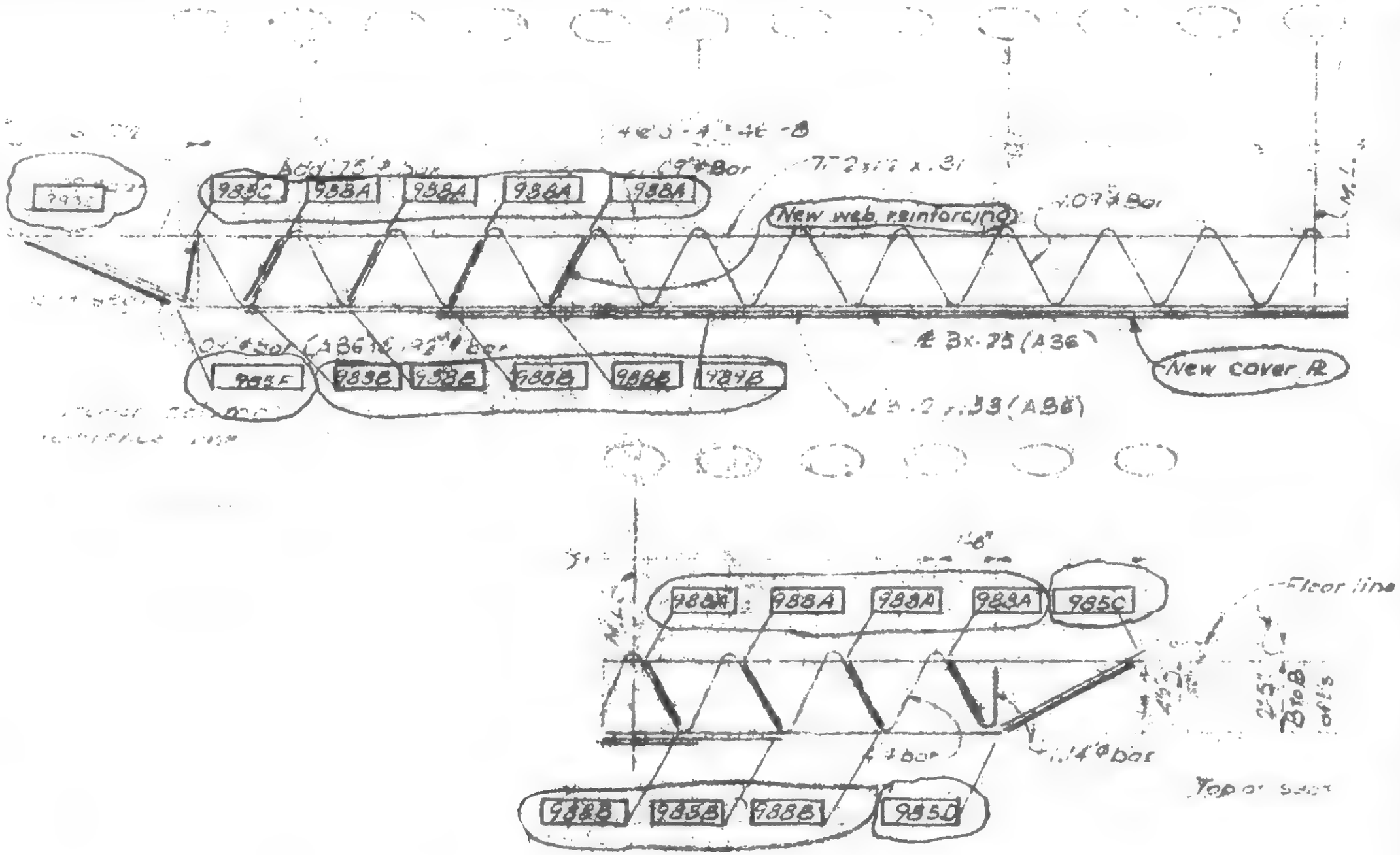


WAB

9-A-983.3

SKILLING HELLE CHRISTIANSEN ROBERTSON — Structural & Civil Engineers

PROJECT: THE WORLD TRADE CENTER | TITLE: FLOOR TRUSS C32TB - Fl. 106 | DATE: 1-7-71

REVISIONS
1/27/71
7/30/71
Printed 10/6/71
5/9/79

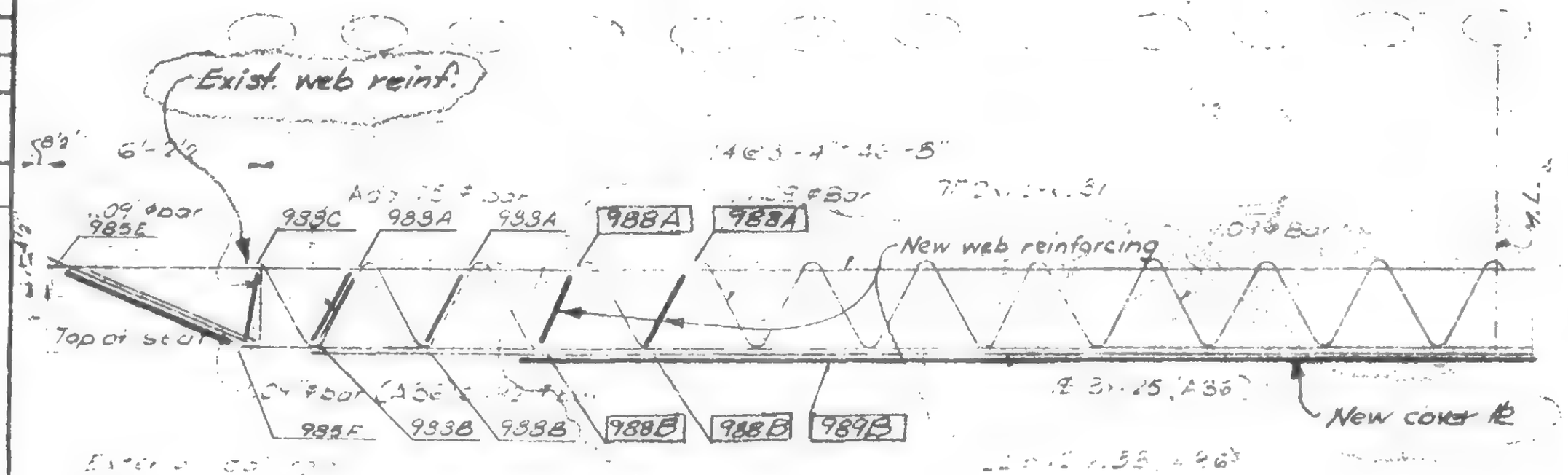


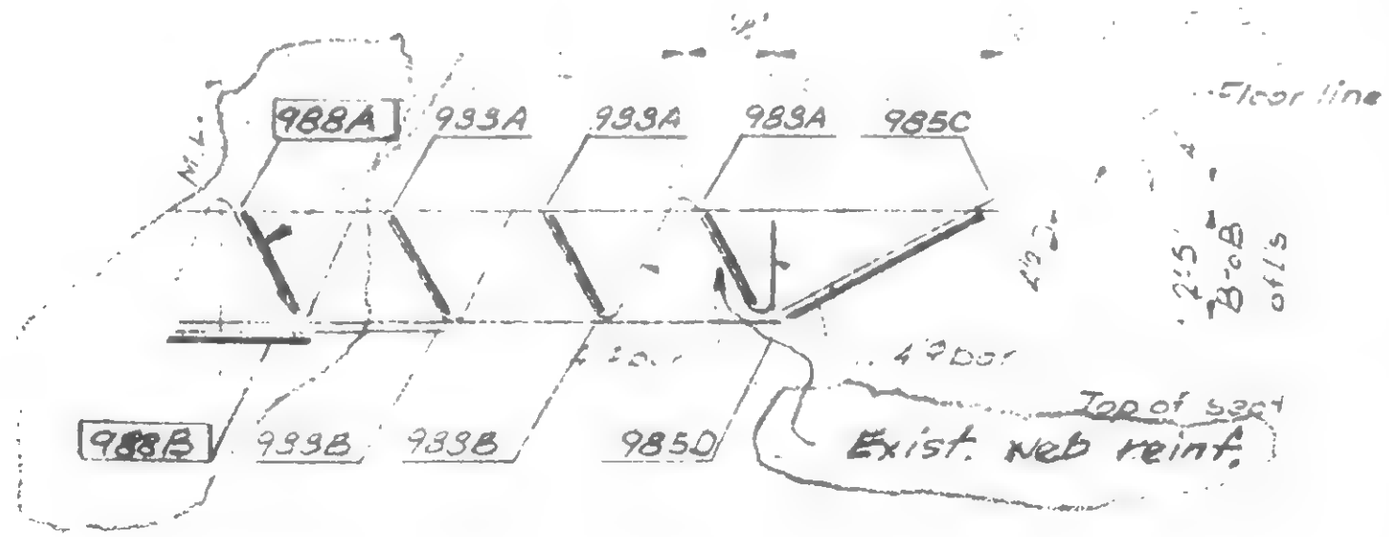


LICENSED PROFESSIONAL ENGINEER — LESLIE E. ROBERTSON — NO 34360 — UNIVERSITY OF THE STATE OF NEW YORK

CHKD

DRAWN

REVIEWED W Bynum

19-A-983, 3A

SKILLING HELLE CHRISTIANSEN ROBERTSON — Structural & Civil Engineers

PROJECT: T-E WORLD TRADE CENTER | TITLE: FLOOR TRUSS C5777-Fl. 106 | DATE: 1-7-71

REVISIONS

1/27/71

7/30/71

10/6/71

5/9/79

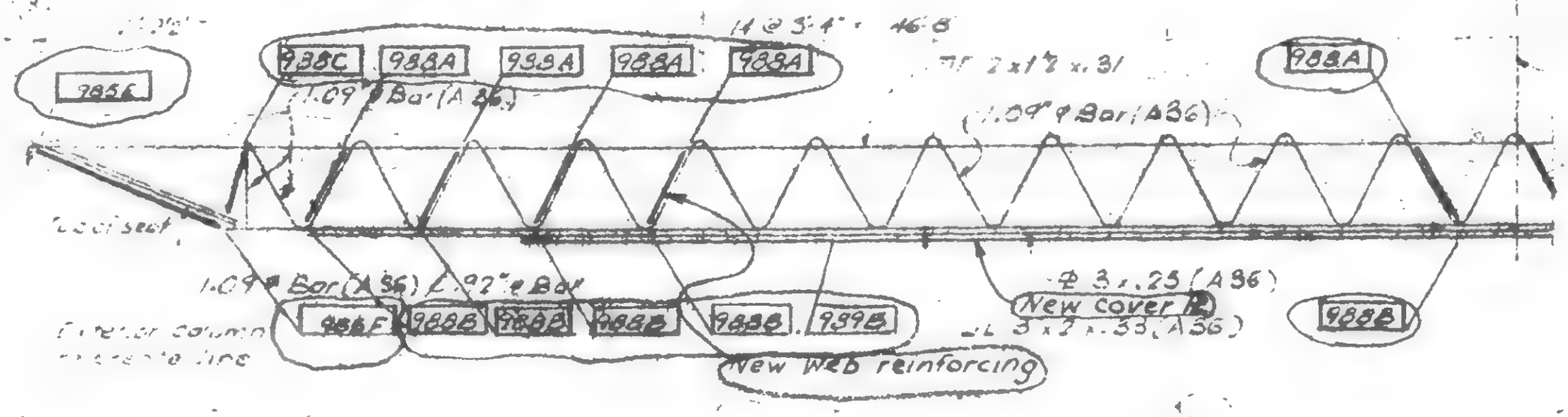


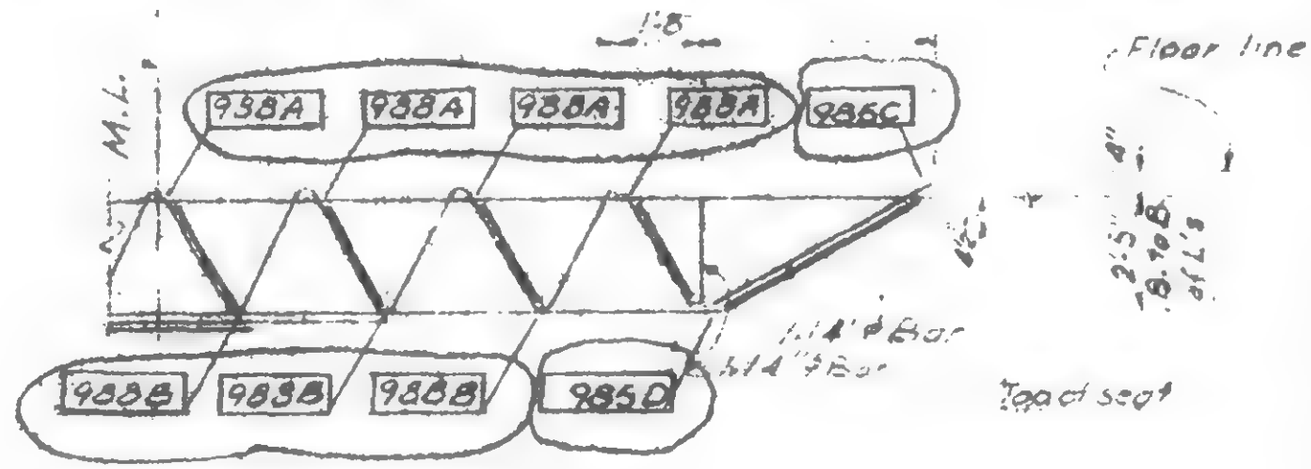


WAB

19-A-989.4

SKILLING · HELLE · CHRISTIANSEN · ROBERTSON — Structural & Civil Engineers

WTC 444.0

PROJECT: THE WORLD TRADE CENTER

TITLE: FLOOR TRUSS C32TT–Fl. 106

DATE: 1-7-71

REVISIONS

1/27/71

7/30/71

Printed 10/6/71

5/9/79

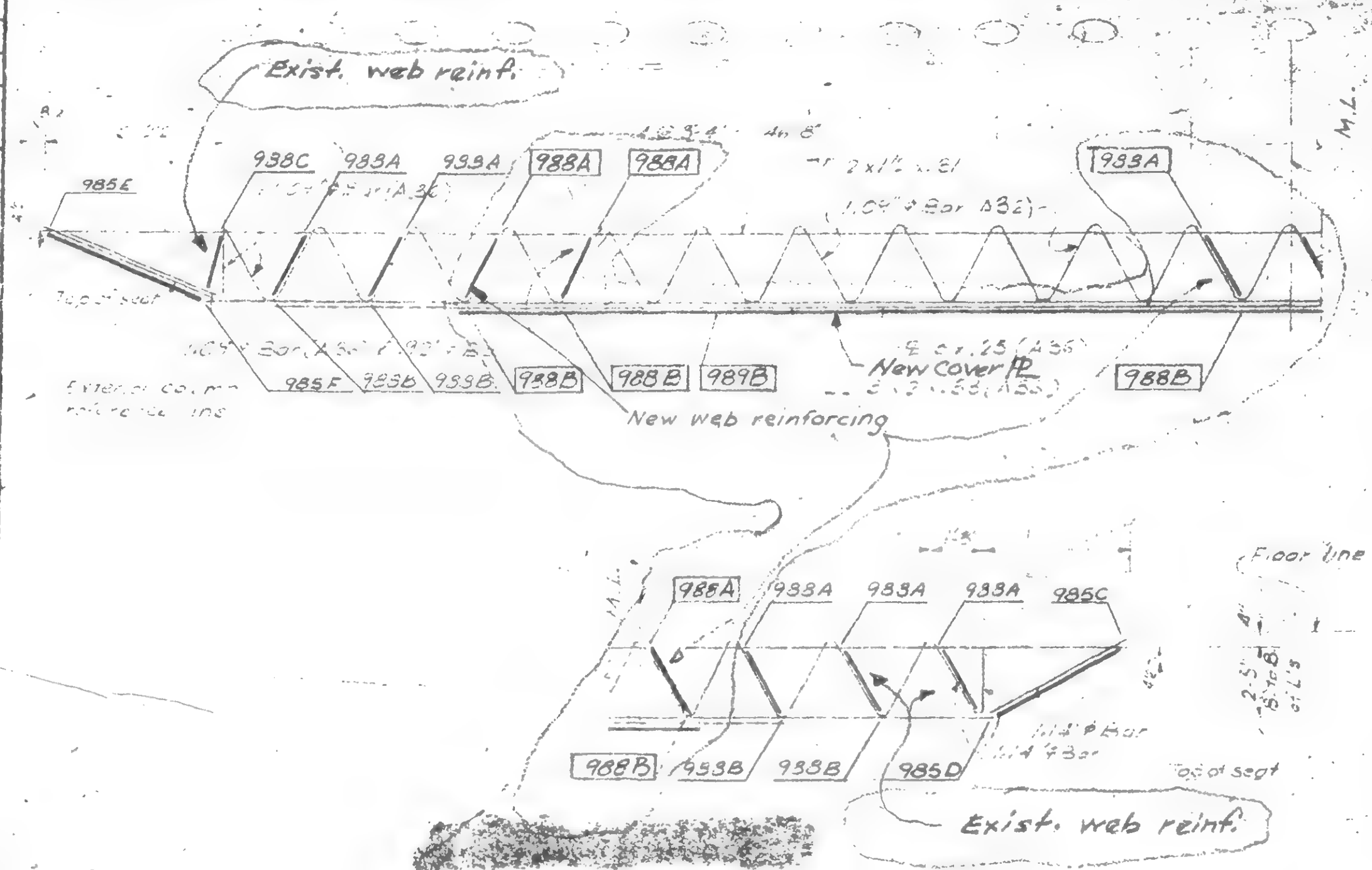


DRAWN

REVIEWED: W. Brewer

19-A 83.4A

SKILLING, [redacted]

PROJECT THE WORLD TRADE CENTER | TITLE FLOOR TRUSS C.3277-FL.10 | DATE 7-7-71

REVISIONS

7/27/71
7/30/71
10/6/71
5/9/79

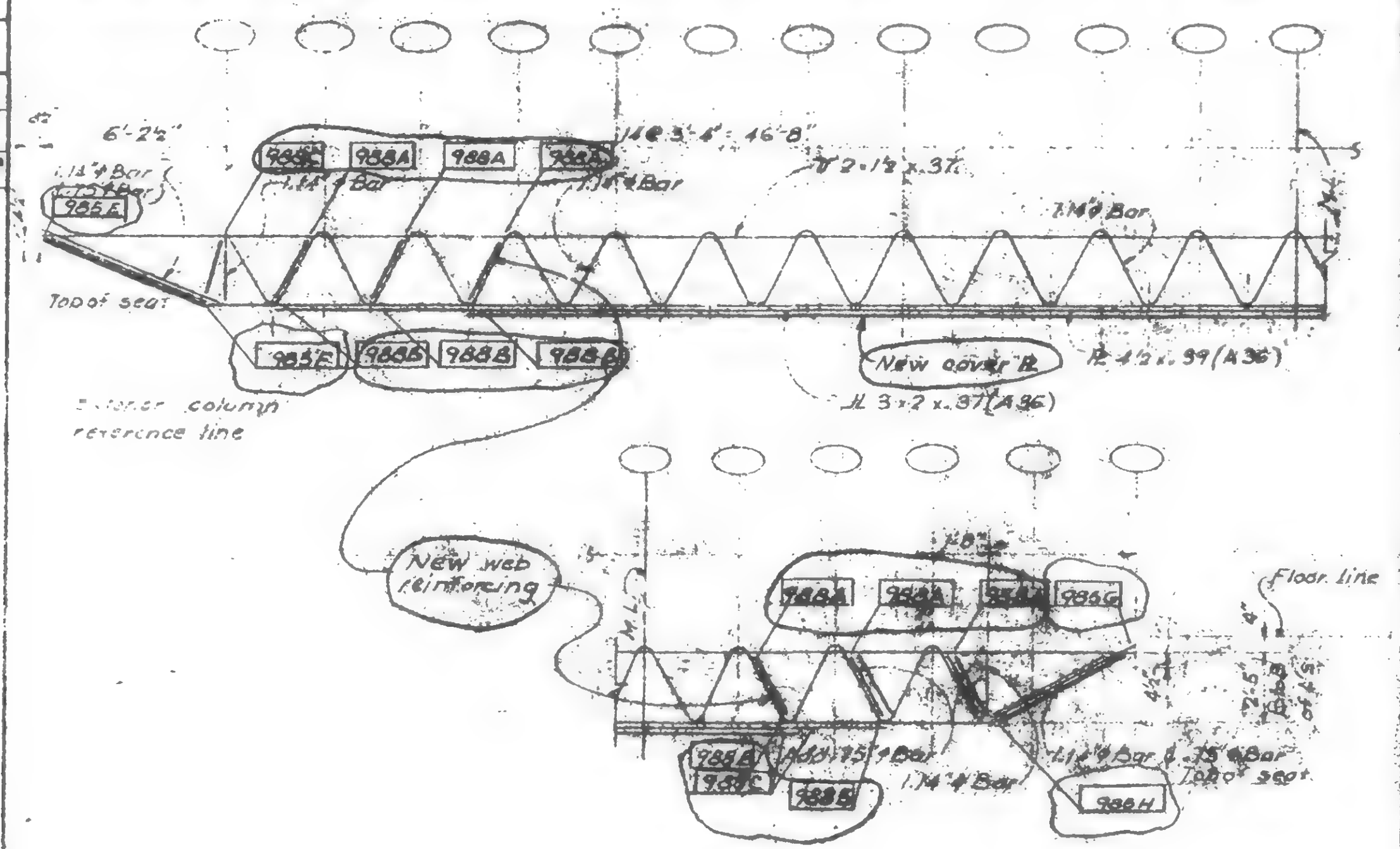


983.5

19-A-[redacted]

W2B

SKILLING, HELLE, CHRISTIANSEN, ROBERTSON — Structural & Civil Engineers

PROJECT: THE WORLD TRADE CENTER | TITLE: FLOOR TRUSS C3273 - Fl. 106 | DATE: 1-7-71

REVISIONS

7/71
7/30/71
10/6/71
5/9/79

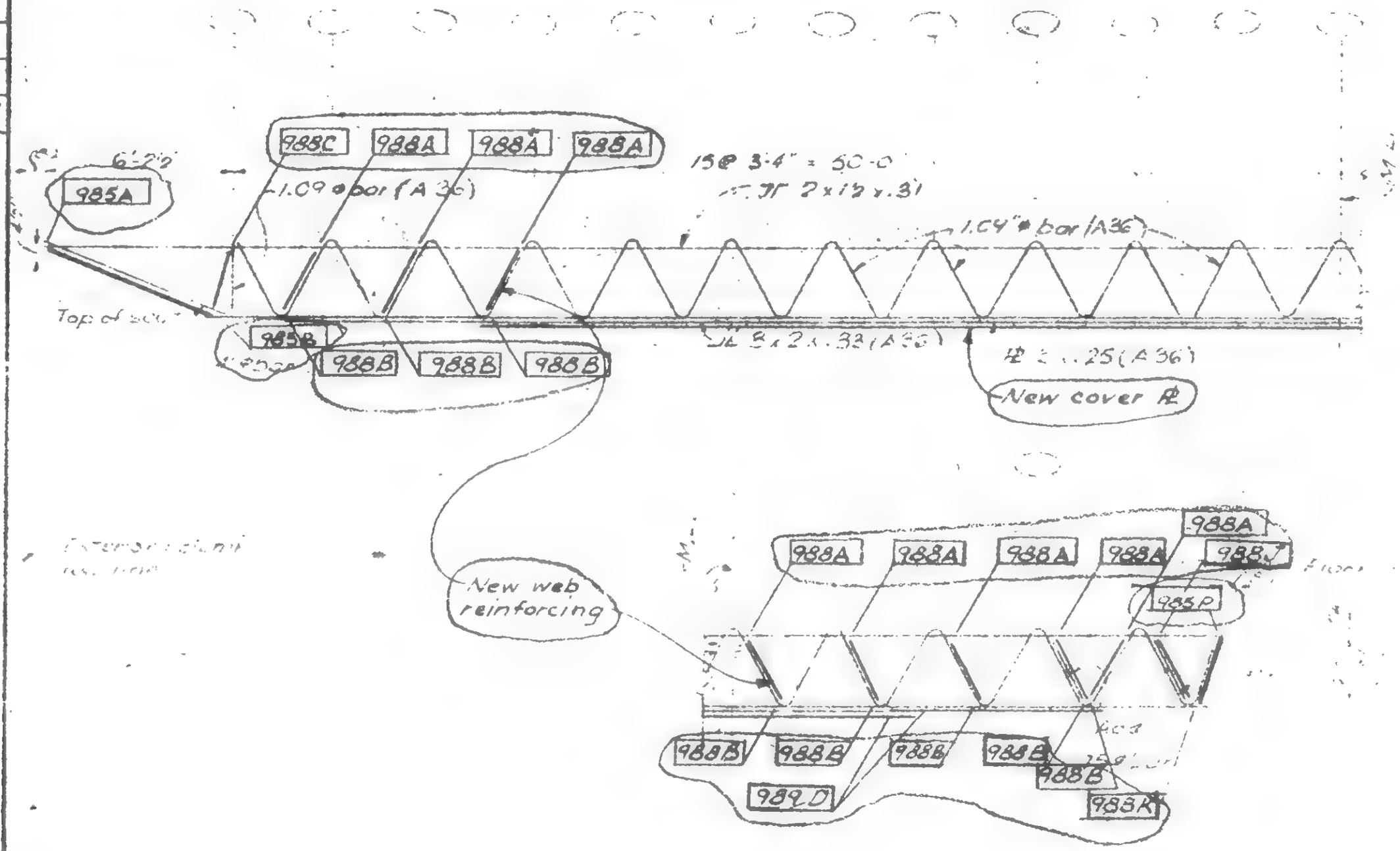


19A-983.6

SKILLING HELLE CHRISTIANSEN ROBERTSON — Structural & Civil Engineers

PROJECT: THE WORLD TRADE CENTER | TITLE: FLOOR TRUSS C 32 T9 - Fl. 106 | DATE: 1-7-71

REVISIONS

1-7/71
7/30/71
10/6/71
5/9/79

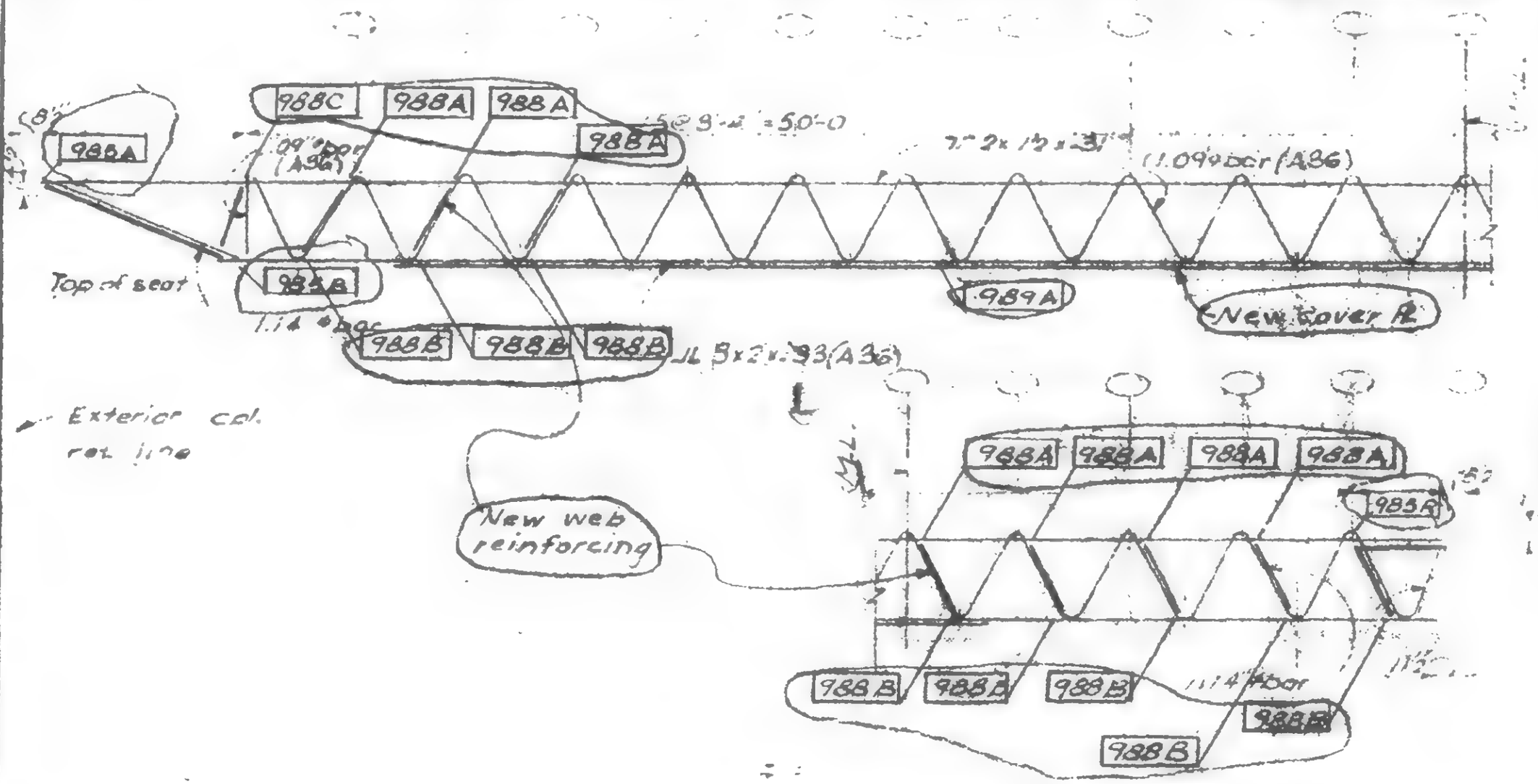


19-A-983.7

SKILLING HELLE CHRISTIANSEN, ROBERTSON — Structural & Civil Engineers

PROJECT: THE WORLD TRADE CENTER | TITLE: FLOOR TRUSS C32T10 - FL. 106 | DATE: 1-7-71

REVISIONS

7/7/71

7/30/71

10/6/71

5/9/79

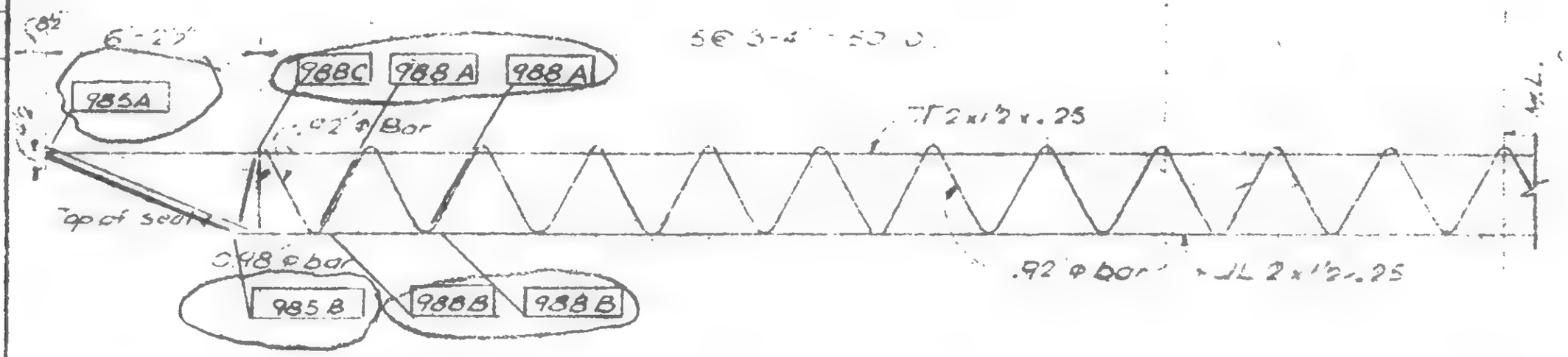


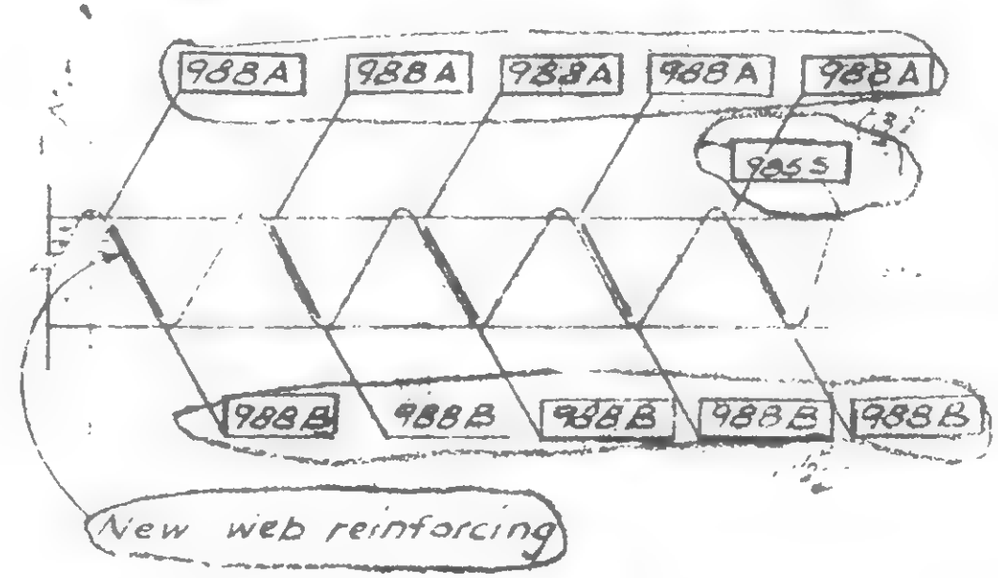


19-A-983.8

SKILLING HELLE CHRISTIANSEN ROBERTSON — Structural & Civil Engineers

PROJECT: THE WORLD TRADE CENTER | TITLE: FLOOR TRUSS C32 11.-Fl. 106 | DATE: 1-7-71

REVISIONS

7/71

7/30/71

10/6/71

5/9/79

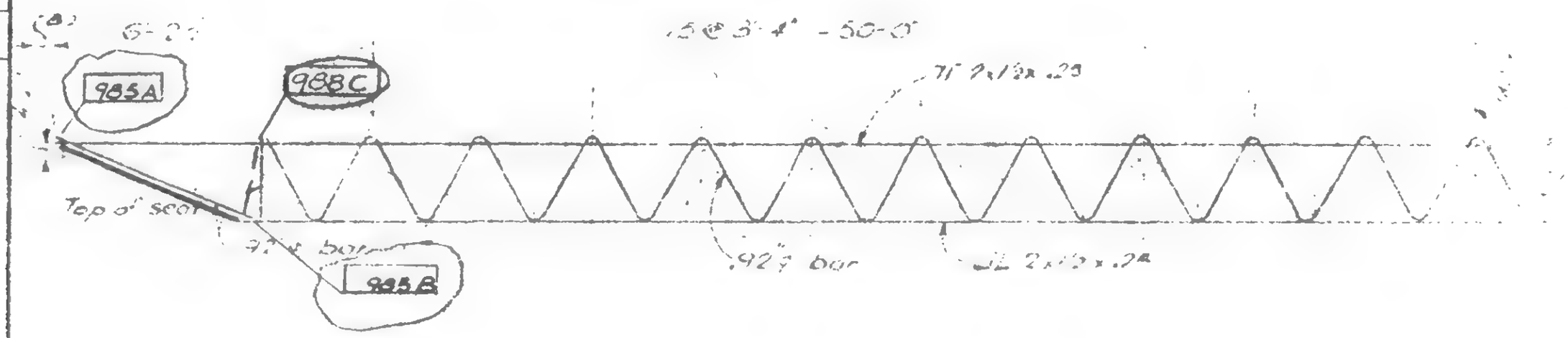


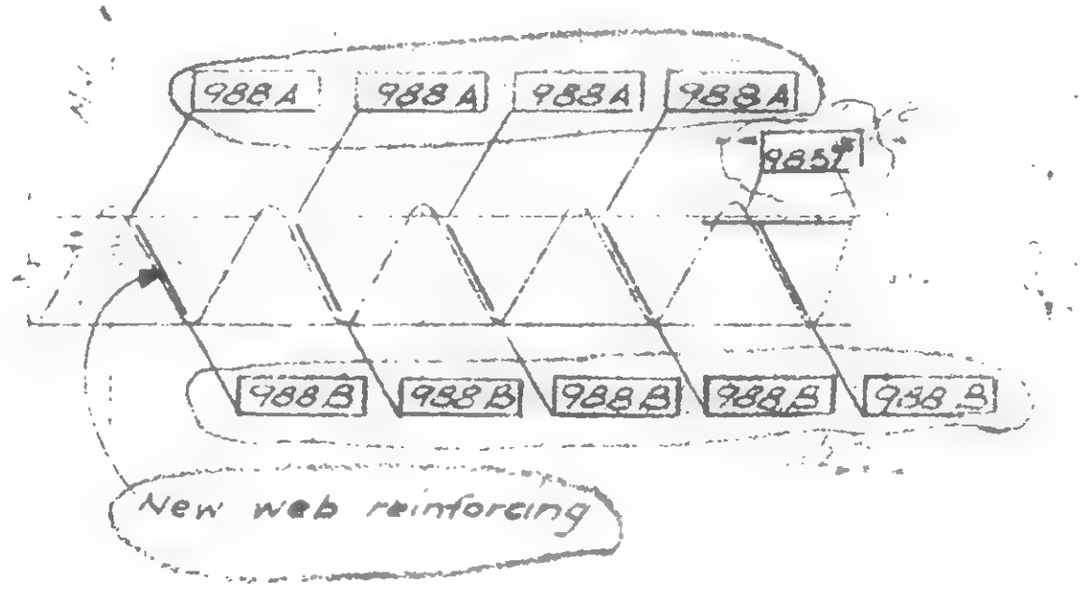


19-A-983.9

SKILLING, HELLE, CHRISTIANSEN, ROBERTSON — Structural & Civil Engineers

PROJECT: THE WORLD TRADE CENTER | TITLE: FLOOR TRUSS C 32T4 - Fl. 106 | DATE: 1-7-71

REVISIONS
1-27-71
7/30/71
10/6/71
5/9/79

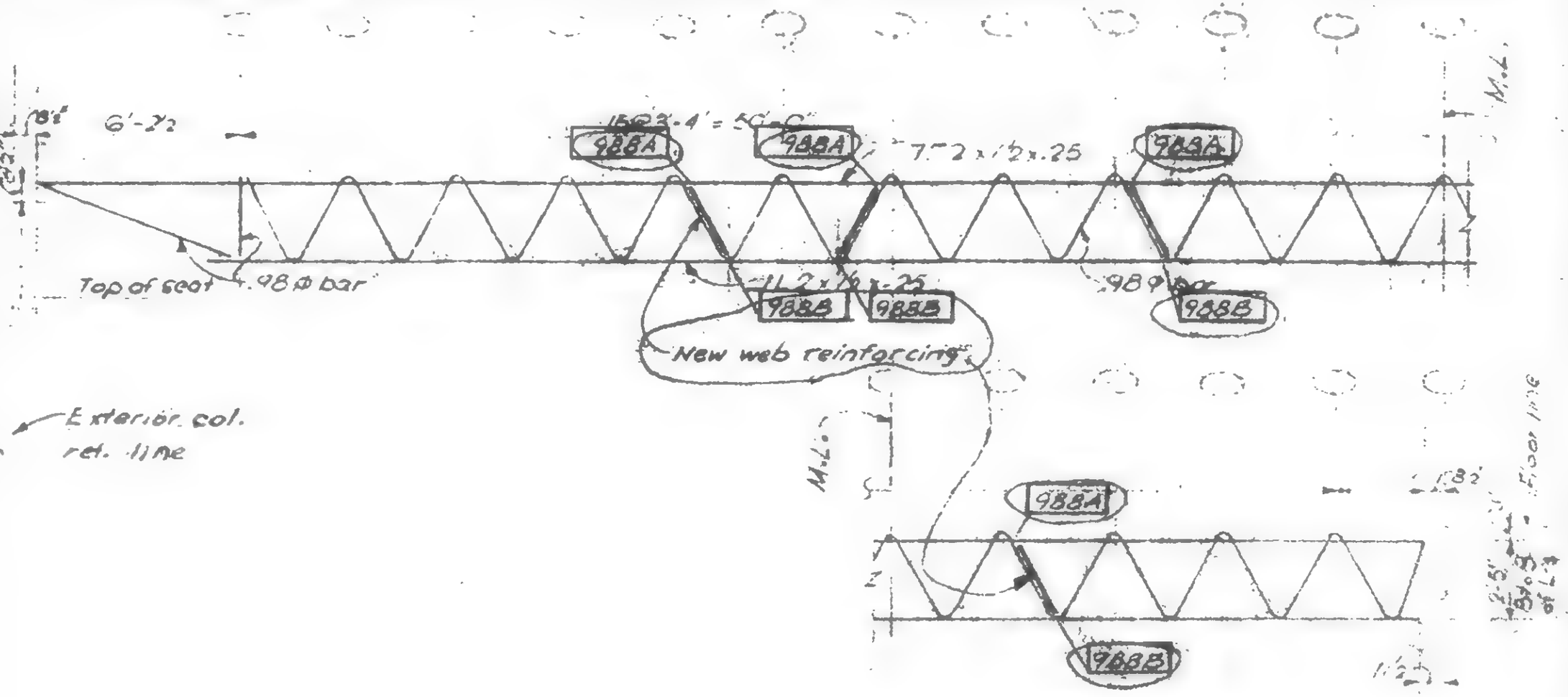

19-A-983.10

SKILLING, HELLE CHRISTIANSEN ROBERTSON — Structural & Civil Engineers

PROJECT: THE WORLD TRADE CENTER | TITLE: FLOOR TRUSS C 327/3 & T6 – Fl. 106 | DATE: 1-7-71

| REVISIONS |
|---|
| 1-27-71 |
| 7/30/71 |
| 10/6/71 |
| 5/9/79 |

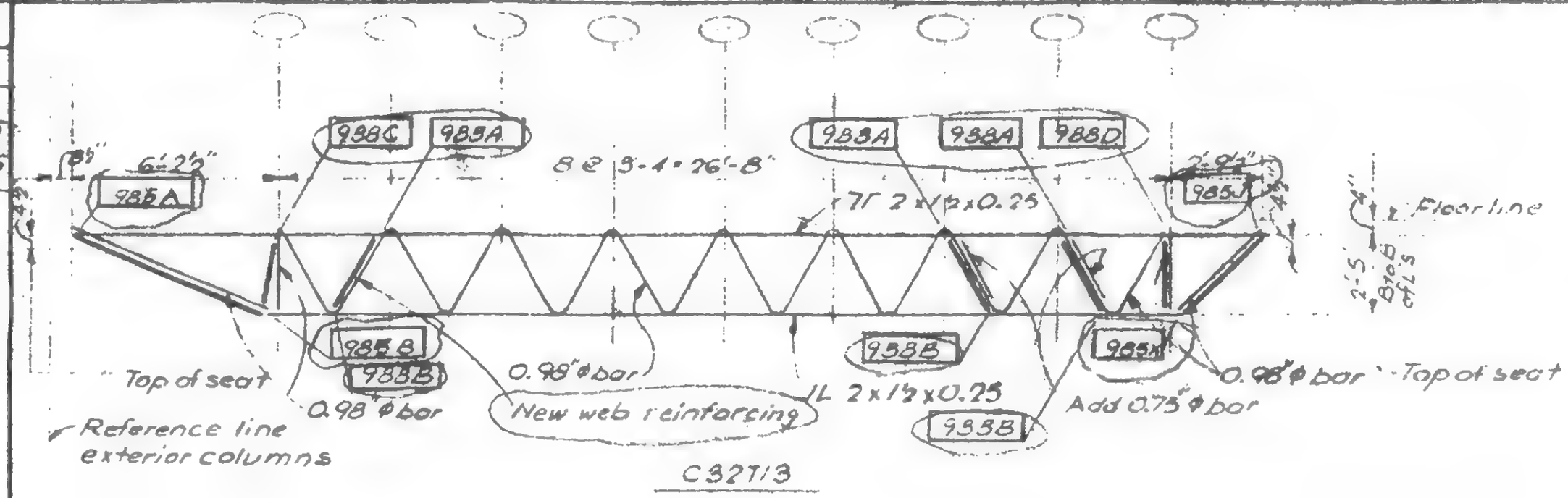


C327/3

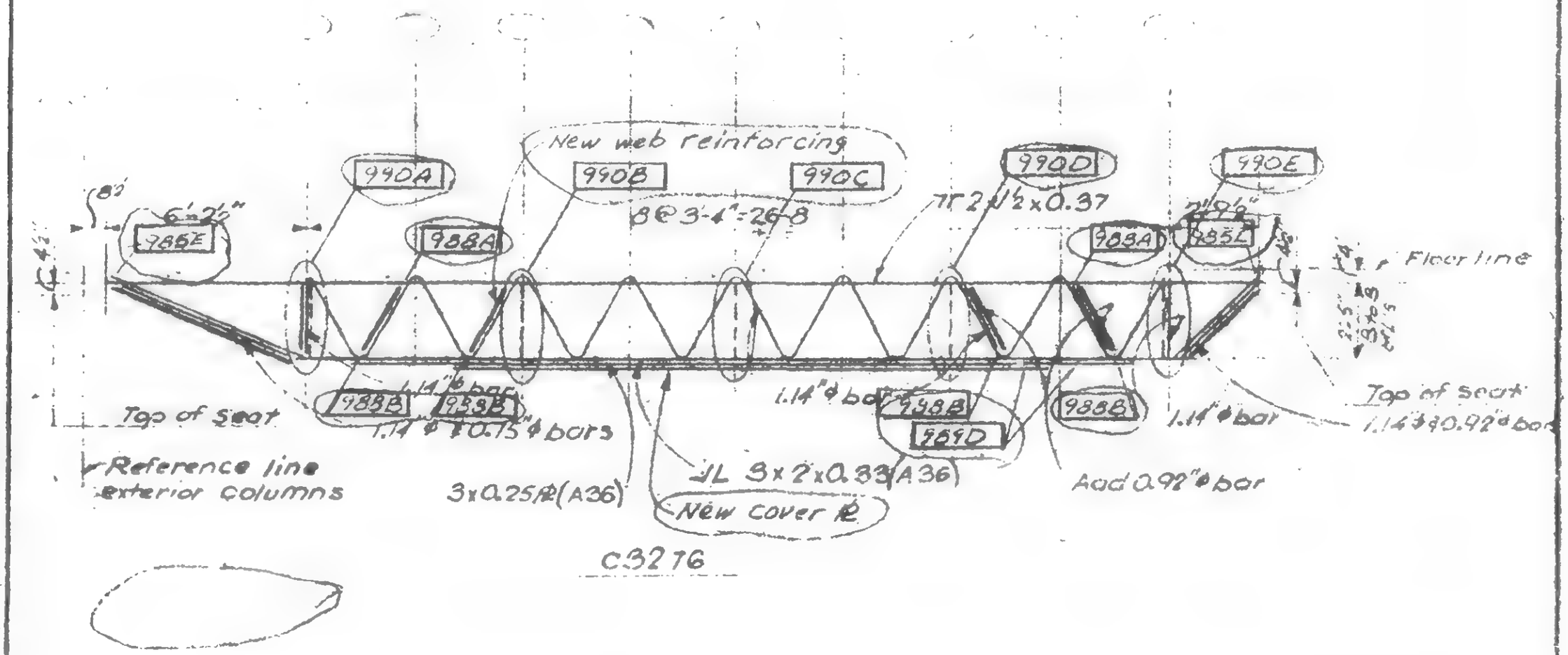


C3276

WDB

19-A-983.11

SKILLING, HELLE, CHRISTIANSEN ROBERTSON — Structural & Civil Engineers

PROJECT: THE WORLD TRADE CENTER | TITLE: FLOOR TRUSS C32T5 & C32T12 - Fl. 106 | DATE: 1-7-71

REVISIONS

| |
|---|
| 11/27/71 |
| 7/30/71 |
| 10/6/71 |
| 5/9/79 |

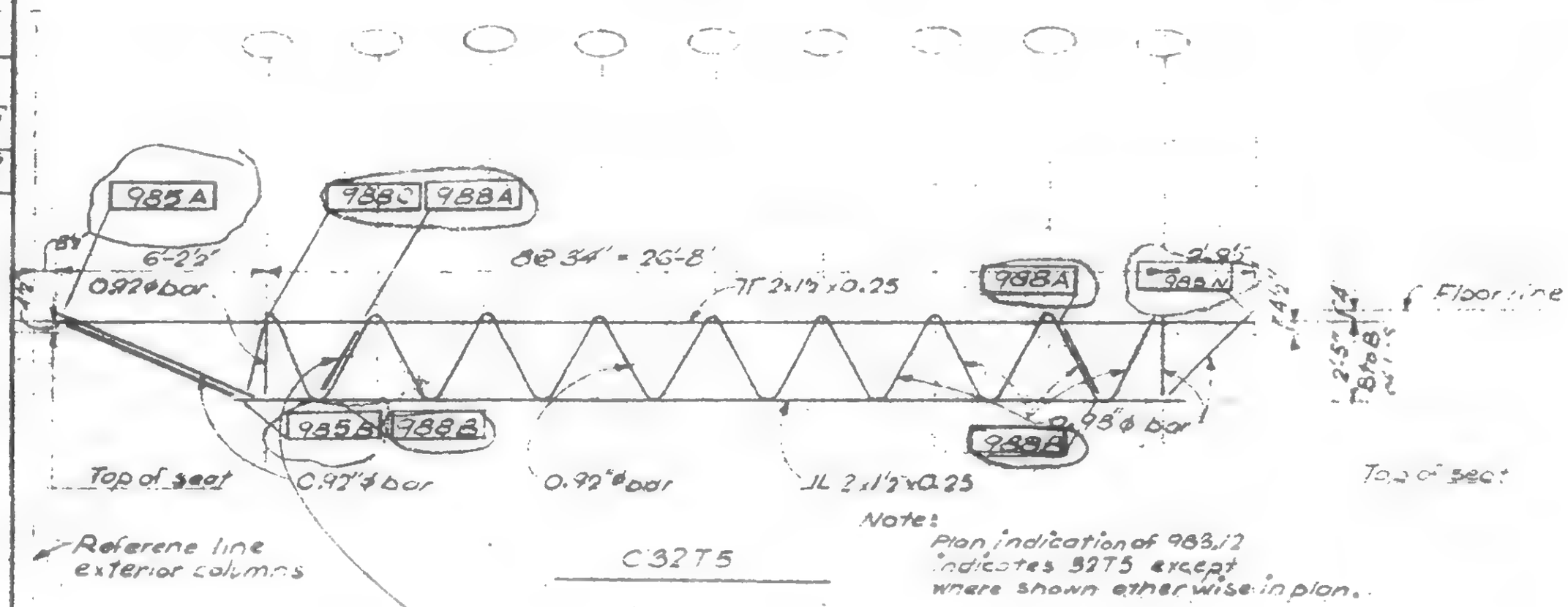


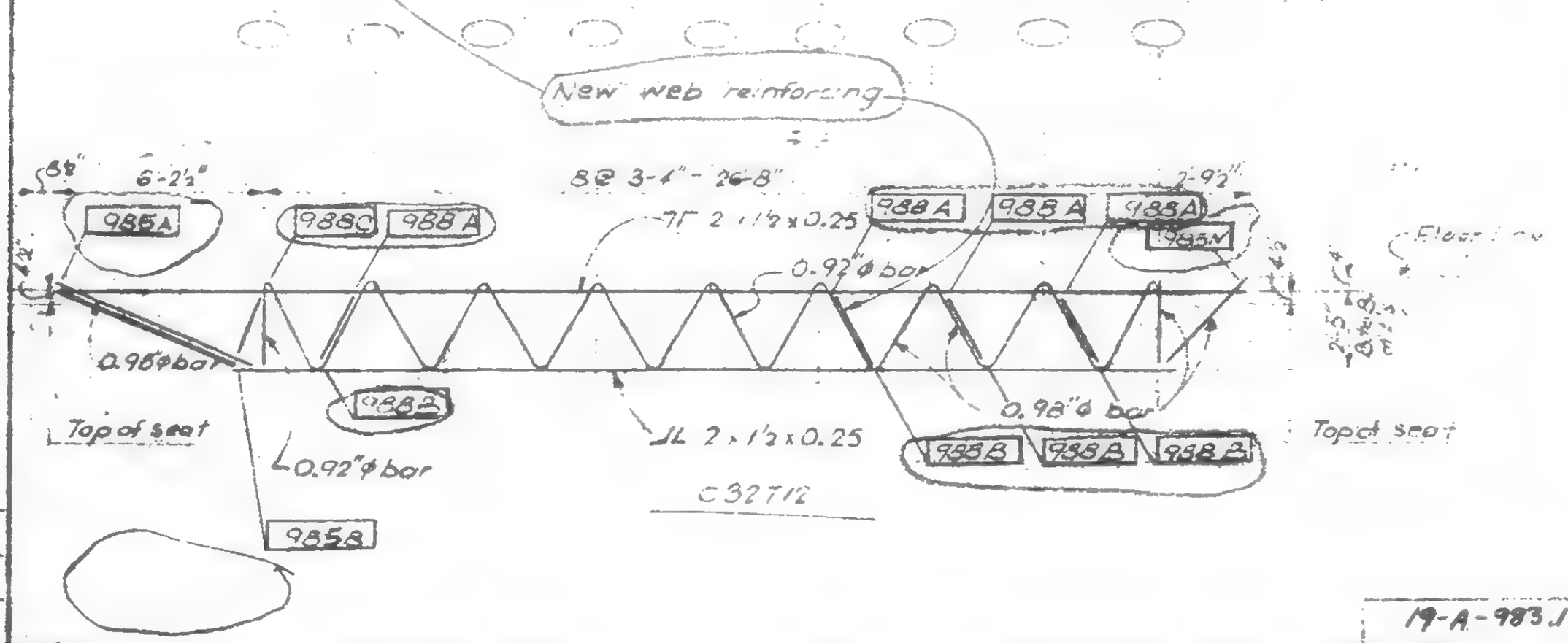


19-A-983.12

SKILLING, HELLE, CHRISTIANSEN, ROBERTSON — Structural & Civil Engineers

WTC 444.00

PROJECT: THE WORLD TRADE CENTER

TITLE: FLOOR TRUSS - FLOOR 106

DATE: 1-7-71

REVISIONS

1/27/71
7/30/71
10/6/71
5/9/79

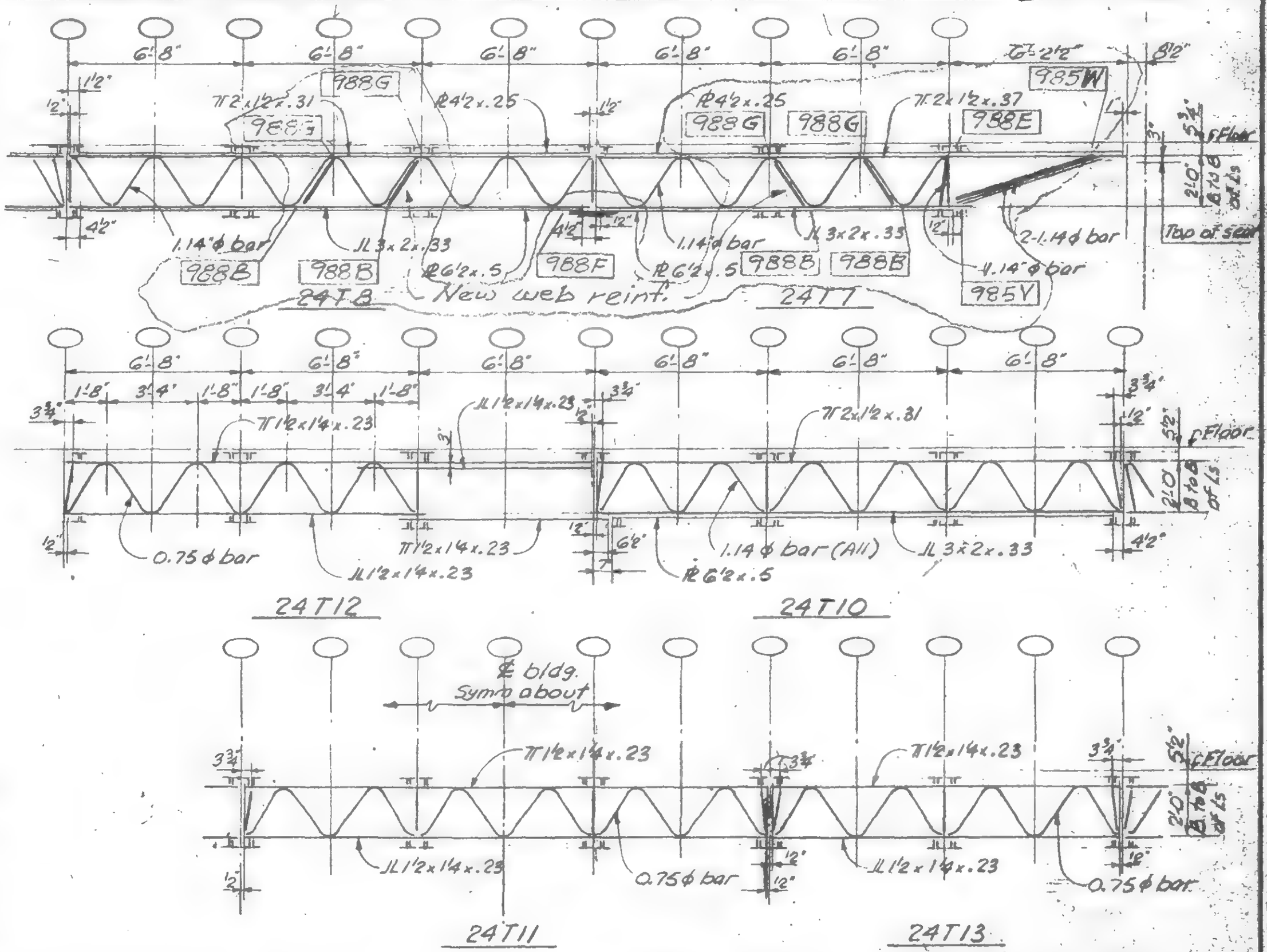


LICENSED PROFESSIONAL ENGINEER — LESLIE E. ROBERTSON — No 34360 — UNIVERSITY OF THE STATE OF NEW YORK

DESIGNED

DRAWN A. FRANQUI

REVIEWED

19-A-984

SKILLING, HELLE, CHRISTIANSEN, ROBERTSON — Structural & Civil Engineers

WTC 444.00

PROJECT: THE WORLD TRADE CENTER

TITLE: FLOOR TRUSS - FLOOR 106

DATE: 1/28/71

REVISIONS
7/30/71
1/6/71
5/19/79

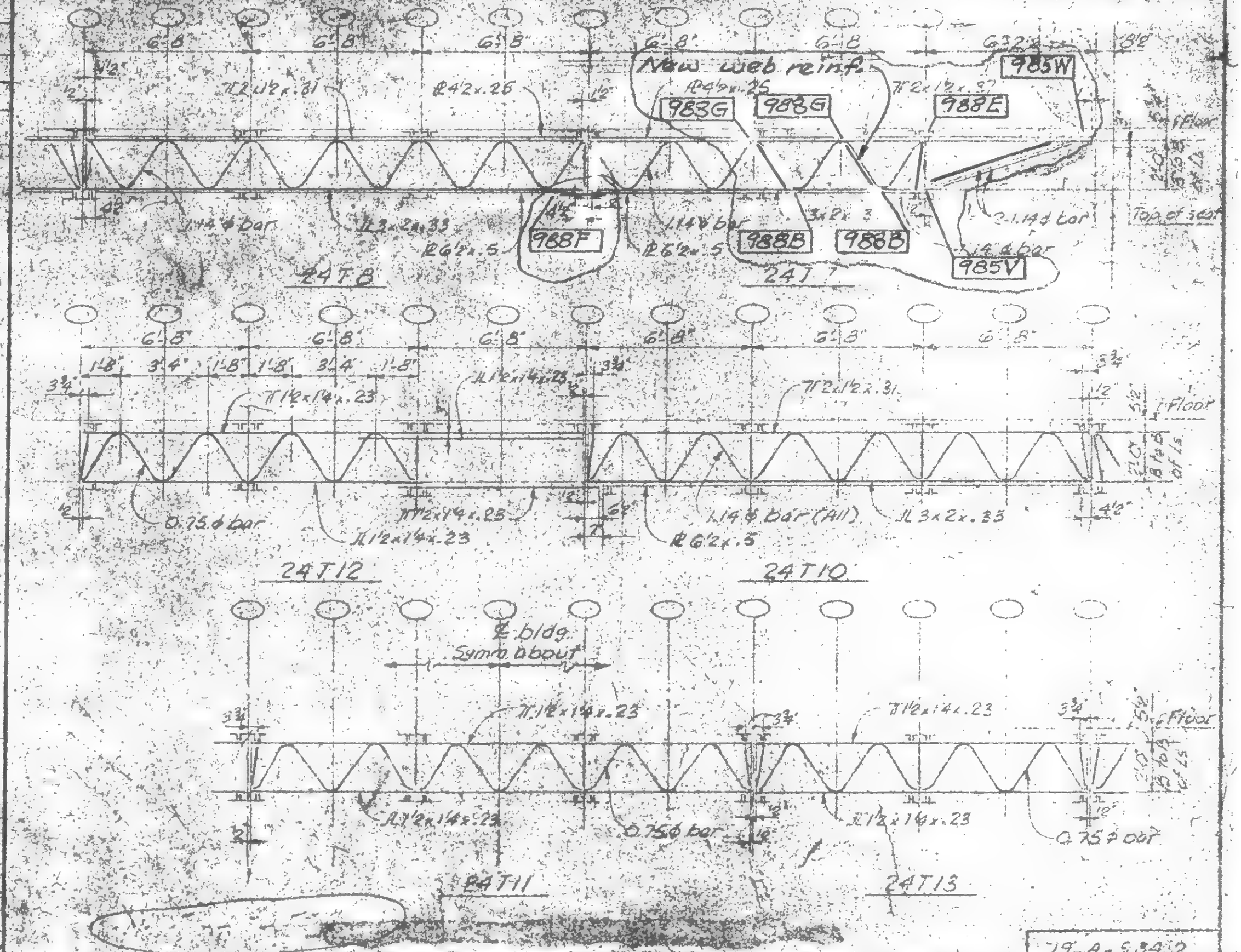


79-A-5942

SKILLING, HELLE, CHRISTIANSEN, ROBERTSON — Structural & Civil Engineers

WTC 444.00

PROJECT: THE WORLD TRADE CENTER

TITLE: FLOOR TRUSS - FLOOR 106

DATE: 1-27-71

REVISIONS
7/30/71
10/6/71
5/9/79

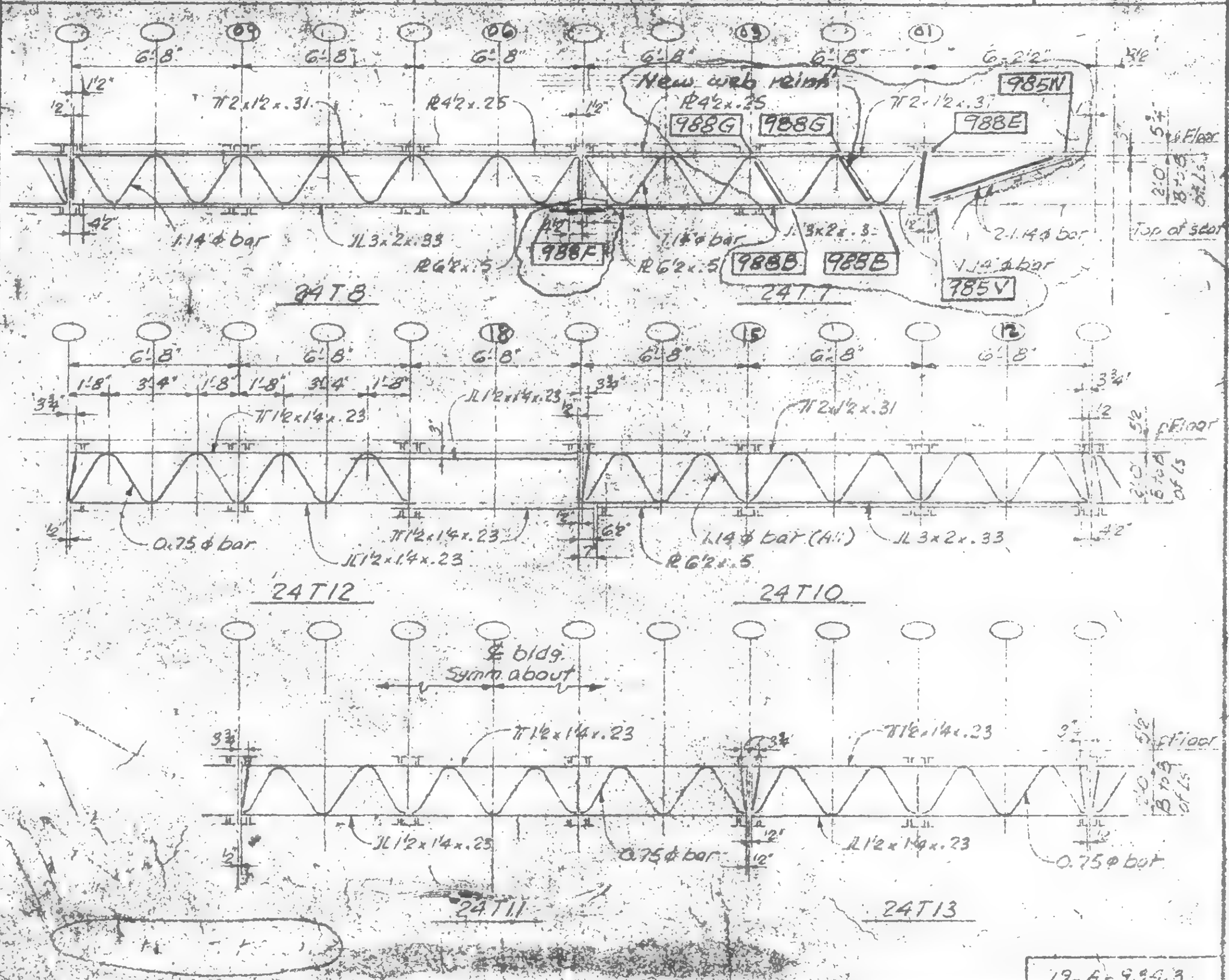


19-A-954.3

WTC 44.00

DATE 2-71

THE WORLD TRADE CENTER — FLOOR TRUSS, FLOOR 106

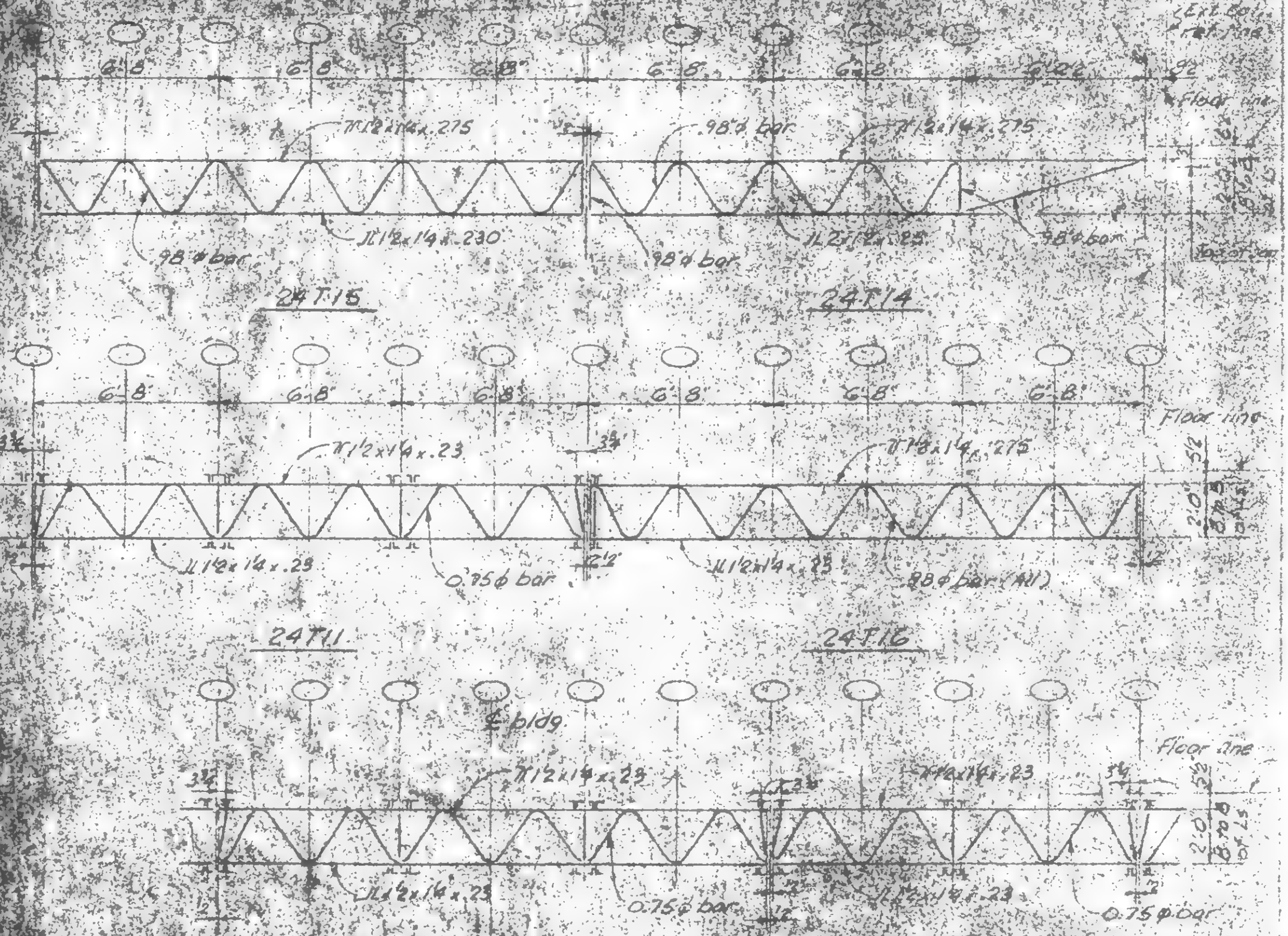


Note: No reinforcing required

19-A-984

SKILLING, HELLE, CHRISTIANSEN, ROBERTSON — Structural & Civil Engineers

WTC 444.00

PROJECT: THE WORLD TRADE CENTER

TITLE: FLOOR TRUSS - FLOOR 106

DATE: 1-7-71

REVISIONS

1/27/71
7/30/71
10/6/71
5/9/79

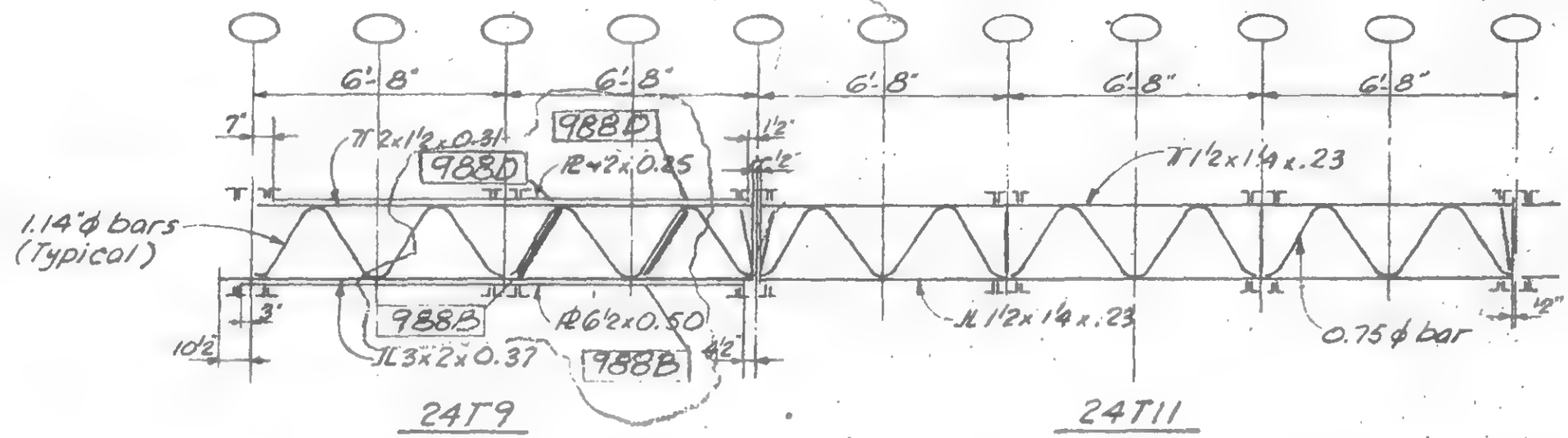


24T9

24T11

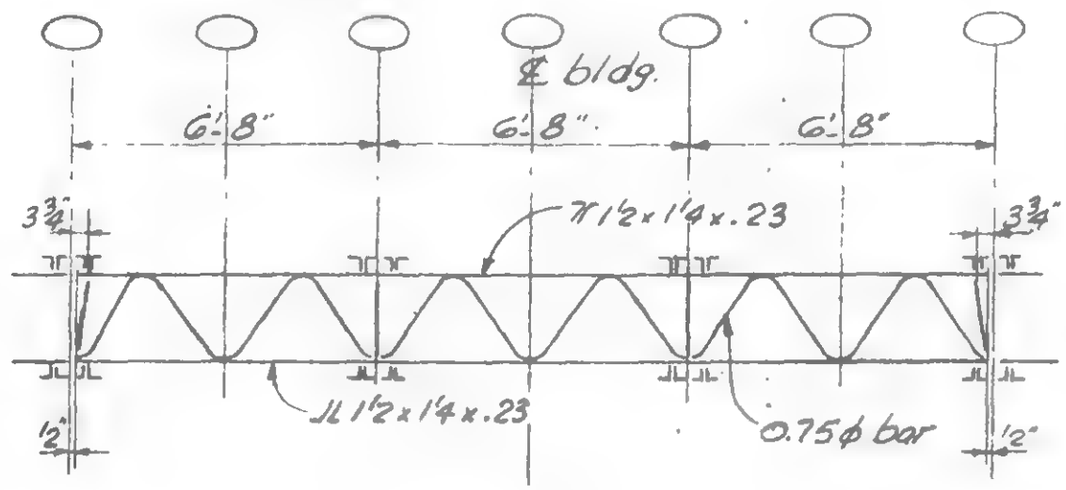


24T11

LICENSED PROFESSIONAL ENGINEER
LESLIE E. ROBERTSON
No 34360
UNIVERSITY OF THE STATE OF NEW YORK

DRAWN A. FRANQUI

19-A-984.5

SKILLING, HELLE, CHRISTIANSEN, ROBERTSON — Structural & Civil Engineers

WTC 444.00

PROJECT: THE WORLD TRADE CENTER — FLOOR FRAMING — FLOOR 106

DATE: 1-27-71

Printed 1/30/71

Printed 3/6/71

Printed 5/9/79

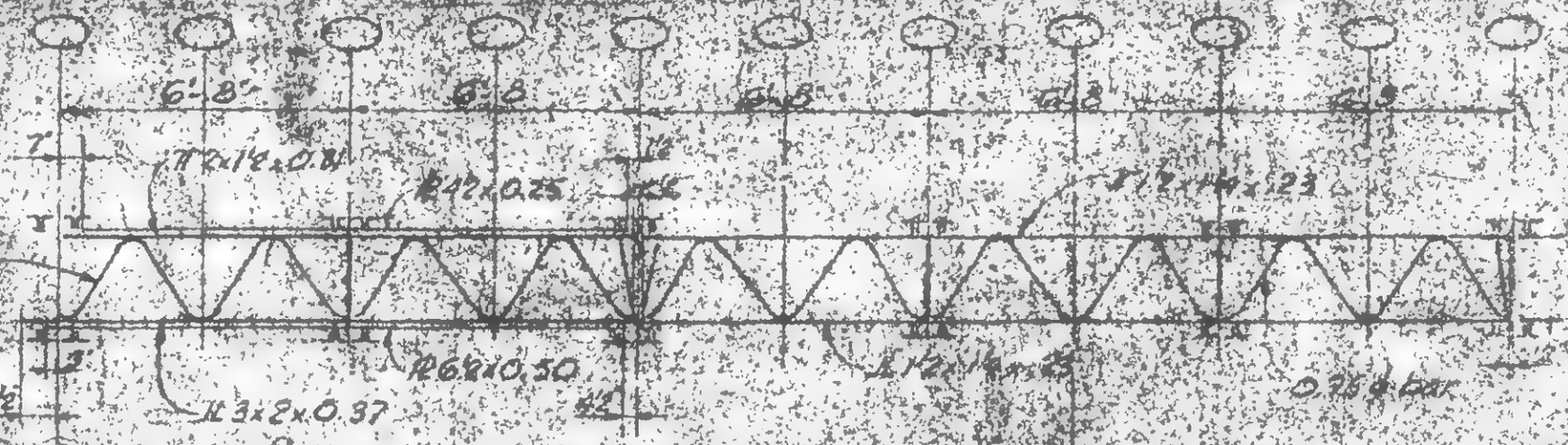


24T9

24T11

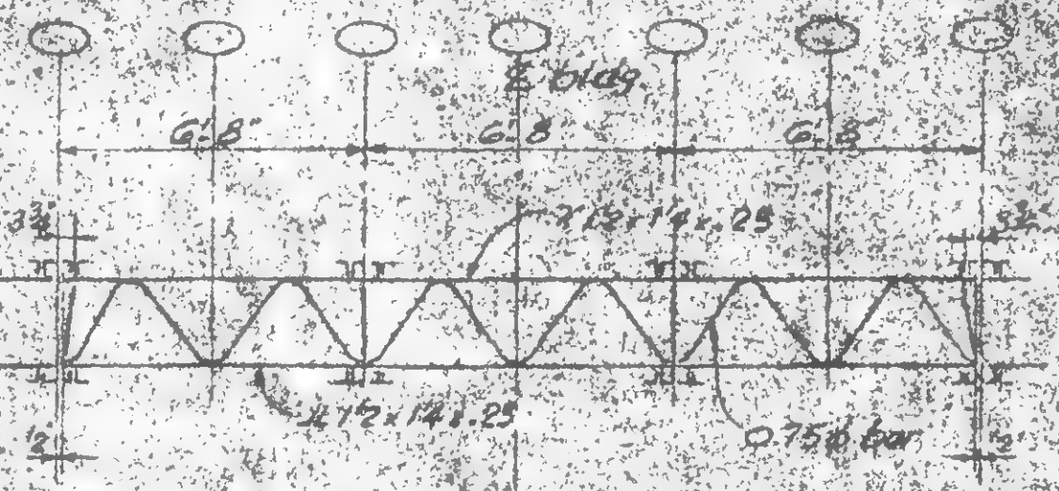


24T11

Note: No reinforcing required

Revised

319-A-7846

SKILLING, HELLE, CHRISTIANSEN, ROBERTSON — Structural & Civil Engineers

PROJECT: THE WORLD TRADE CENTER | TITLE: TRUSS DETAILS - FLOOR 106 | DATE: 5-9-79

REVISIONS

AT BRIDGING TRUSS

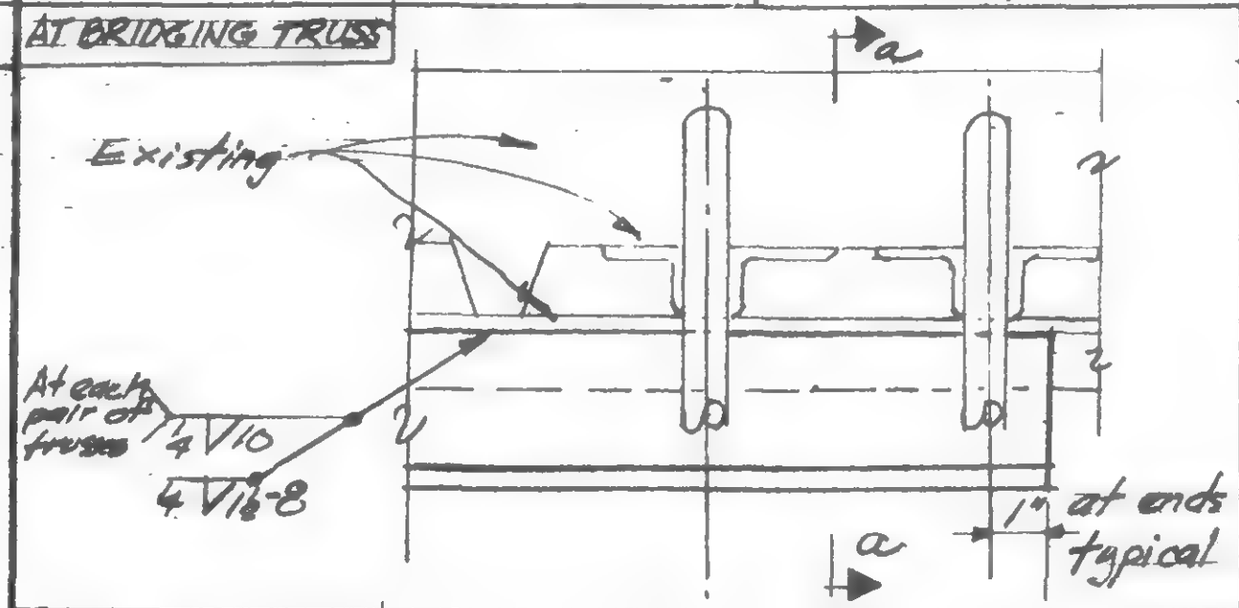


a

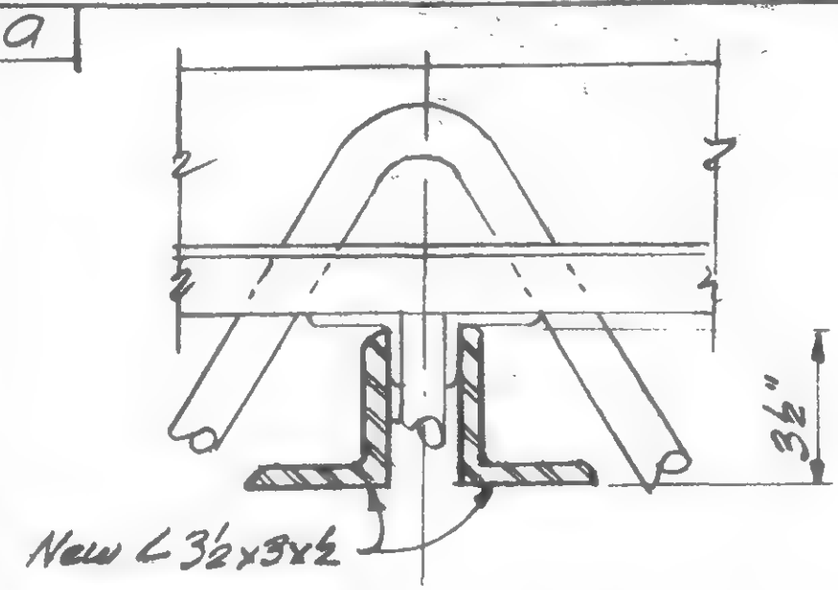


AT DECK ANGLE

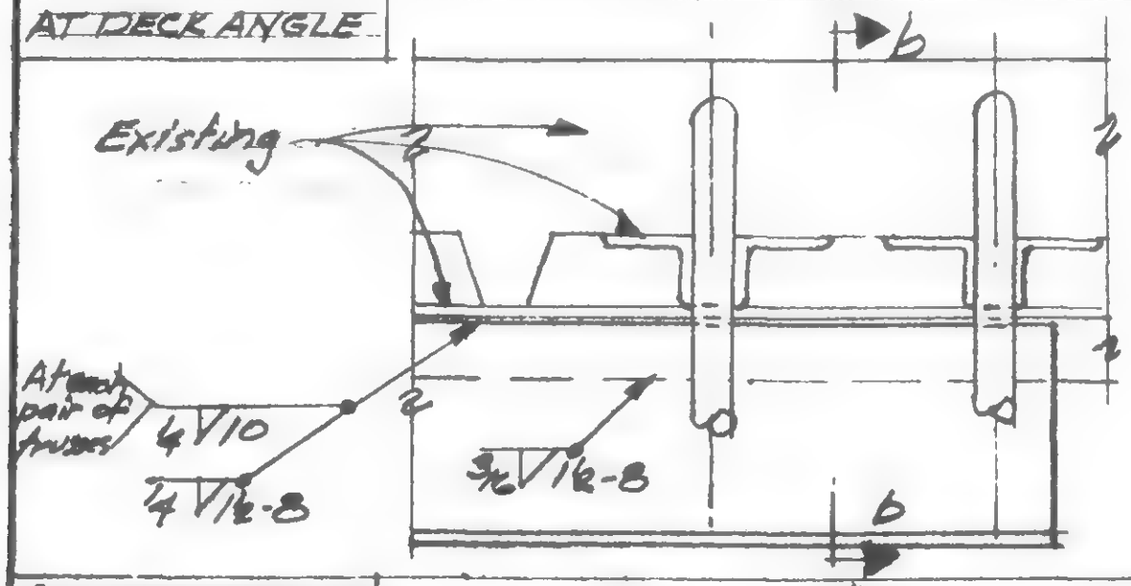


b

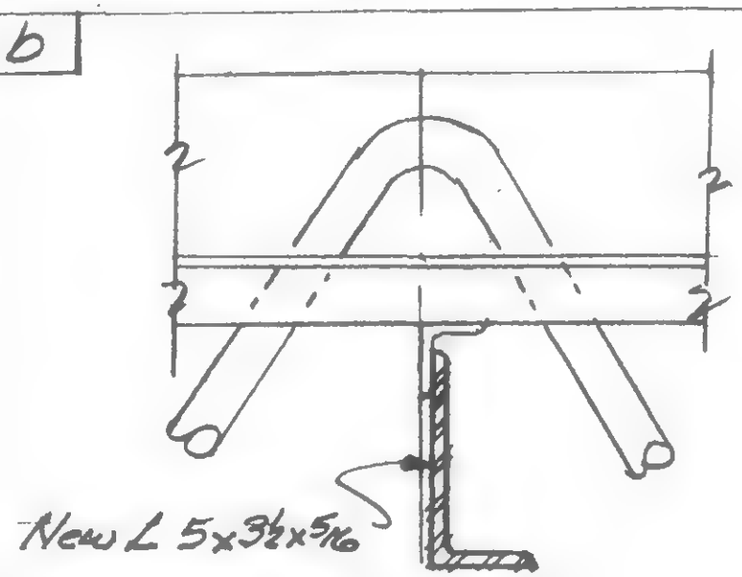


AT OTHER PANEL PTS.

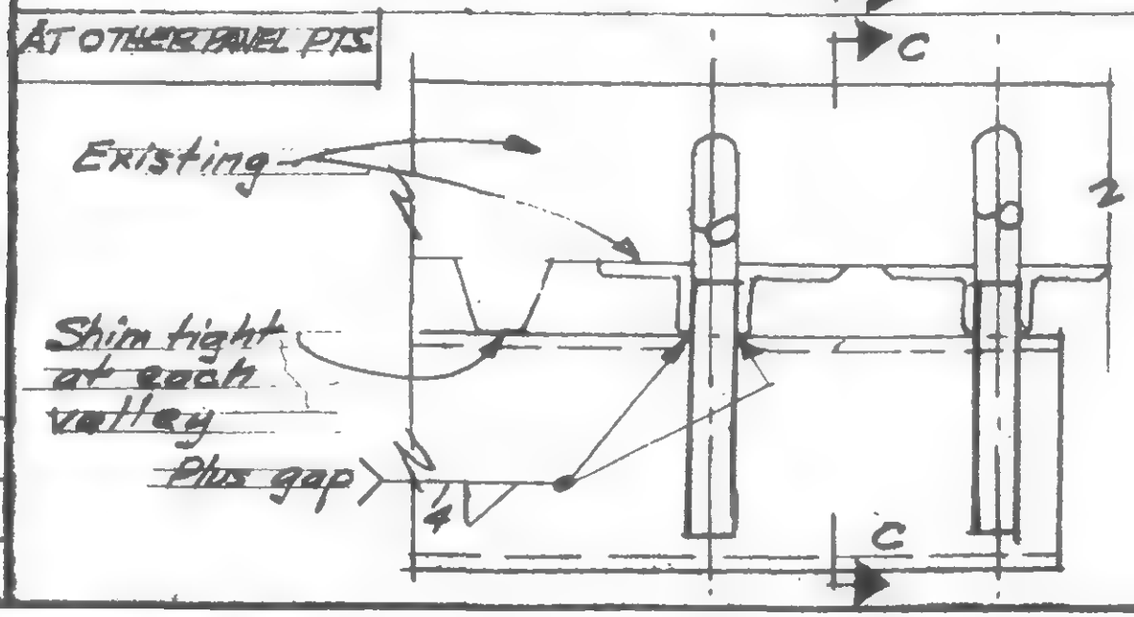


c

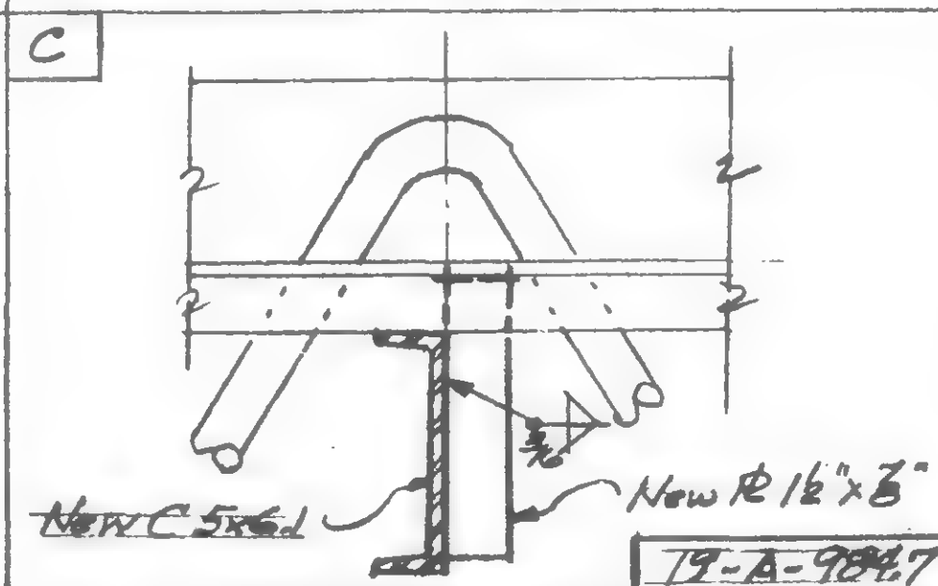


19-A-984.7

LICENSED PROFESSIONAL ENGINEER — LESLIE E. ROBERTSON — No. 34390 — UNIVERSITY OF THE STATE OF NEW YORK

SIGNED

DRAWN

REVIEWED WGB

| REVISIONS |
|---|
| 10/5/79 △2 |
| 10/16/79 △3 |
| 1/30/79 △4 |
| 1/30/80 △5 |

SKILLING, HELLE, CHRISTIANSEN, ROBERTSON — Structural & Civil Engineers

WTC

PROJECT: THE WORLD TRADE CENTER

TITLE: DUMBWAITER PIT SUPPORT - FLOOR 106

DATE: 5-9-79

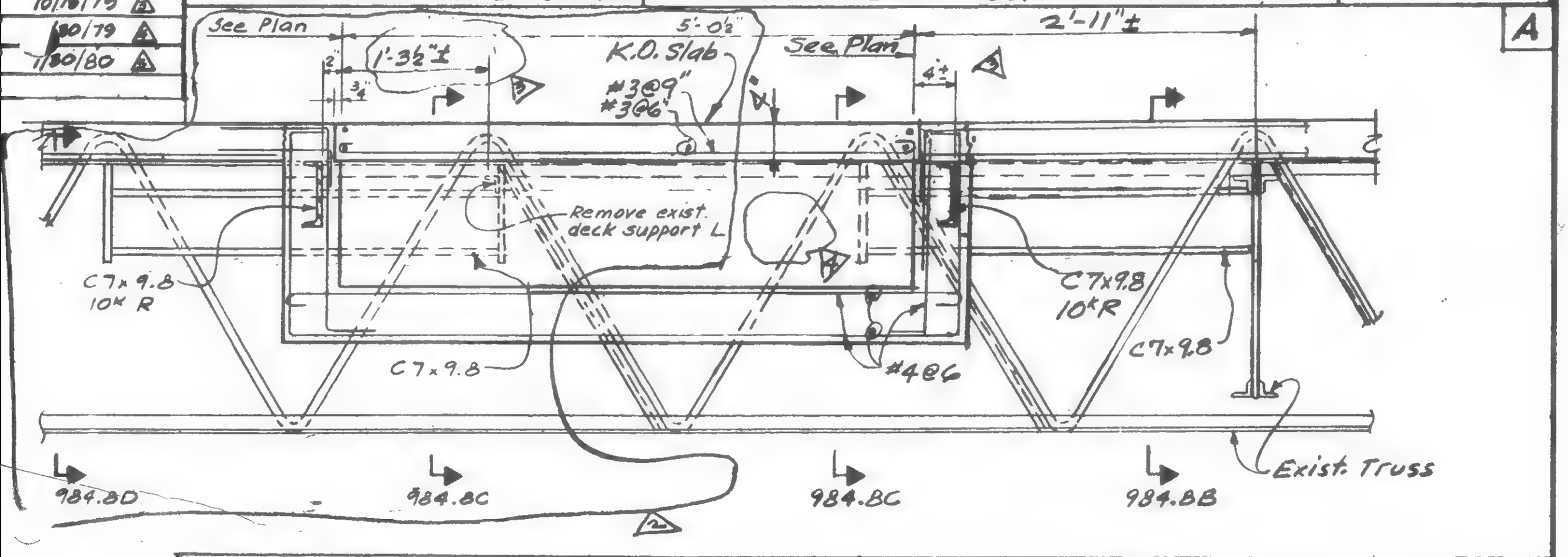


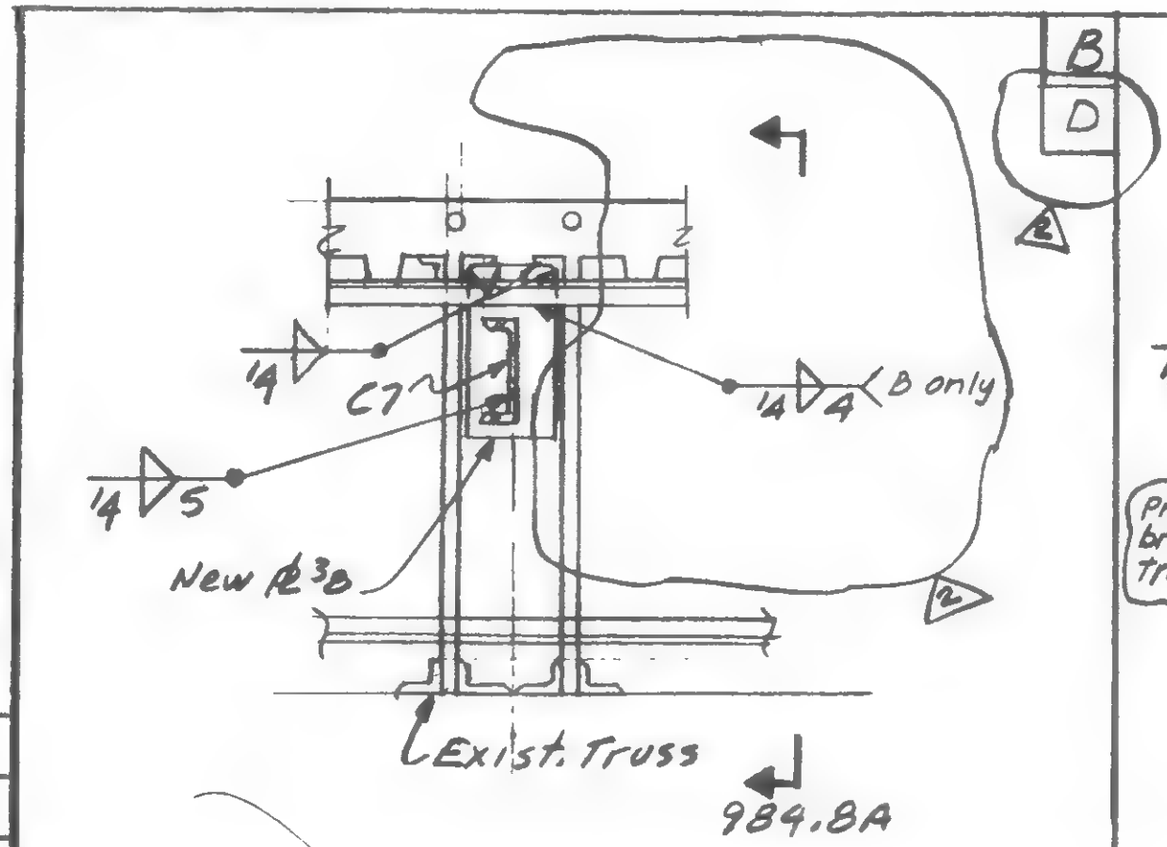


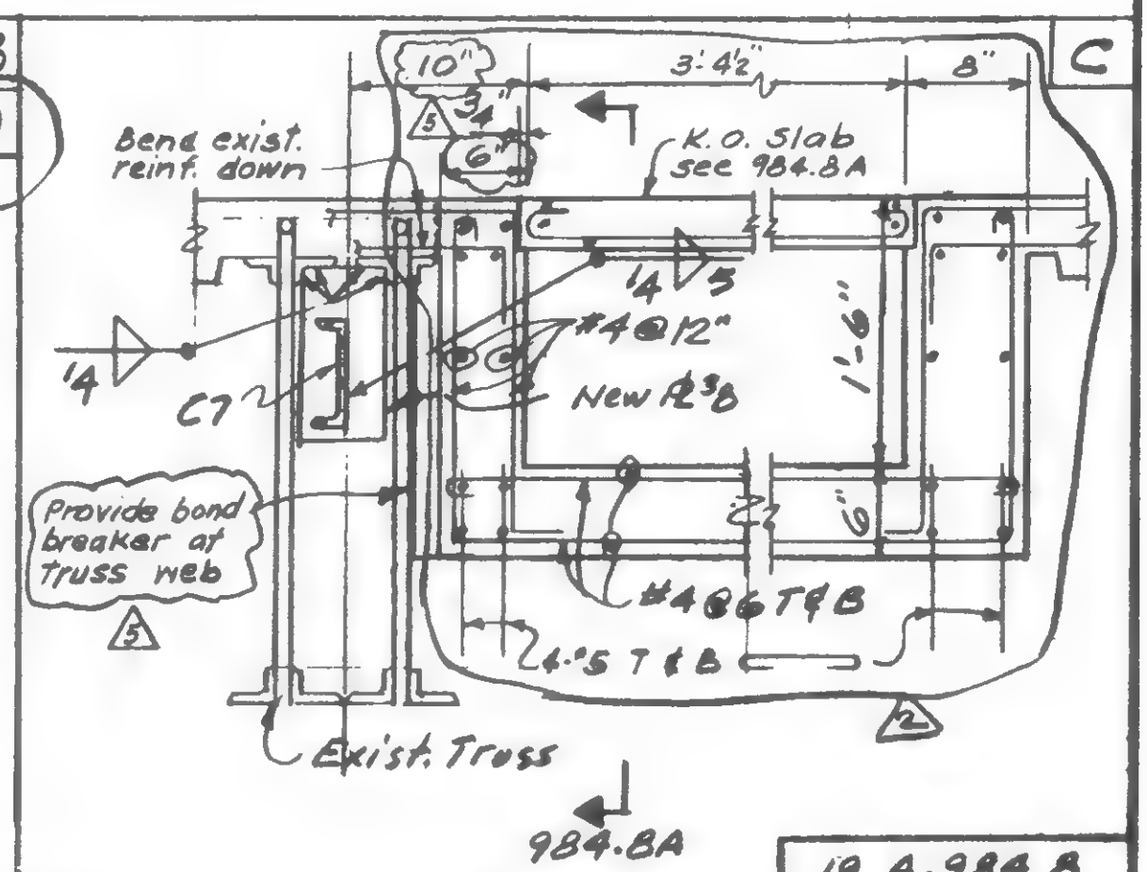


LICENSED PROFESSIONAL ENGINEER — LESLIE E. ROBERTSON — No. 34340 — UNIVERSITY OF THE STATE OF NEW YORK

SIGED

DRAWN

REVIEWED

19-A-984.8

SKILLING, HELLE, CHRISTIANSEN, ROBERTSON — Structural & Civil Engineers

PROJECT: THE WORLD TRADE CENTER | TITLE: TRUSS DETAILS - FL 106 | DATE: 1-7-71

REVISIONS
1/21/71
7/30/71
10/6/71
Printed 5/9/79

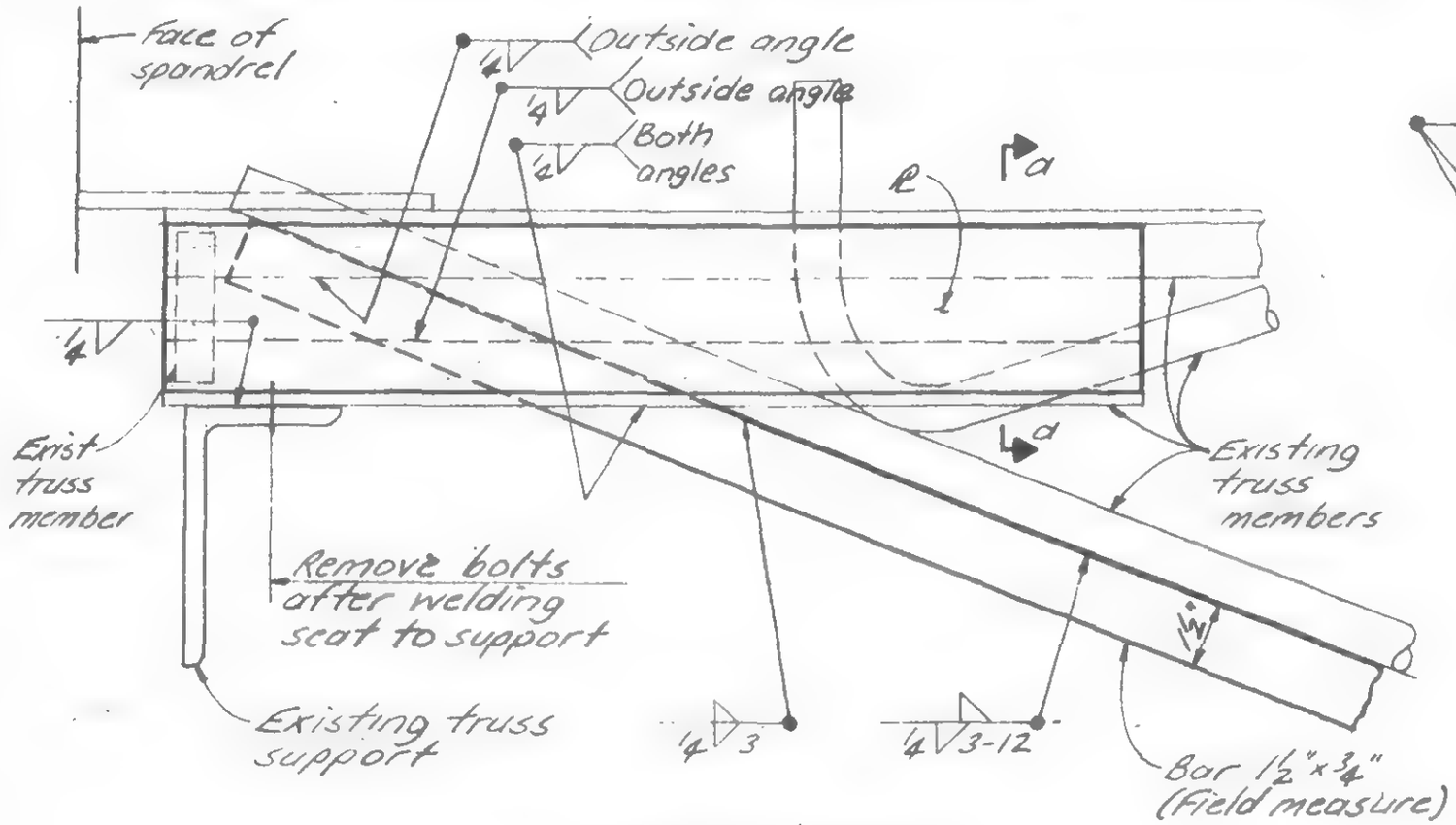


Detail 985A

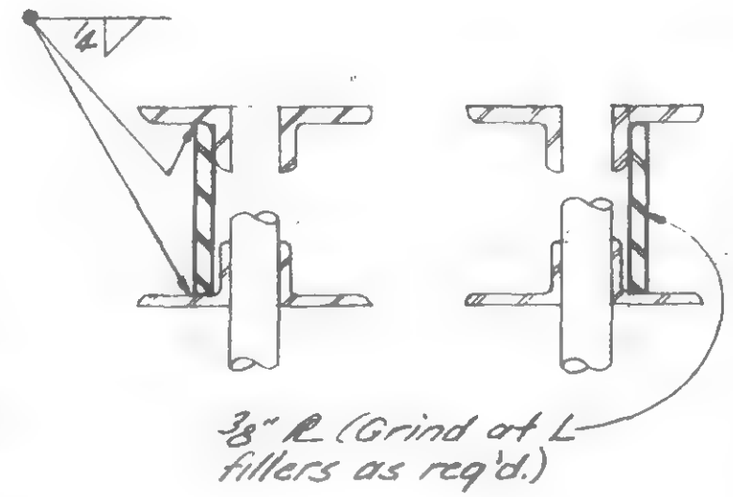


Section a-a

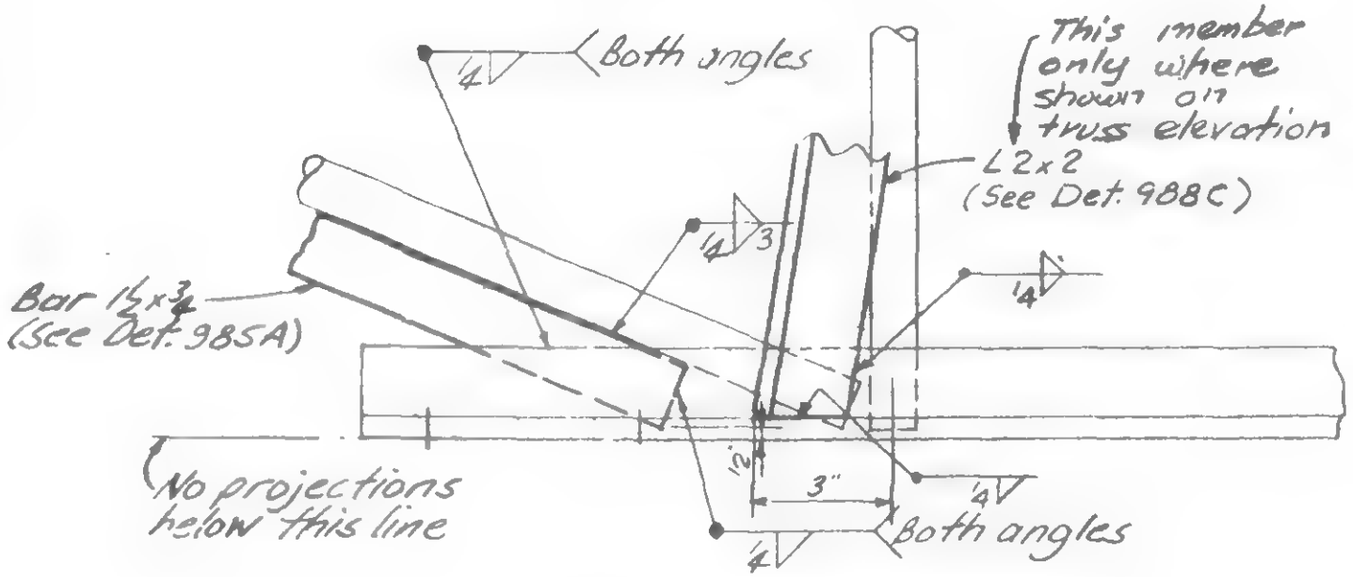


Detail 985B

Notes:

1. All added material to be A36 unless otherwise noted.
2. If parts to be joined with fillet welds cannot be brought into direct contact, the fillet weld shall be increased in size above that indicated in the drawing. The increase in size shall be equal to or greater than the gap.
3. L 3x2 deck supports that are disconnected to make the required repairs shall be re-attached after the repair is completed.

LICENSED PROFESSIONAL ENGINEER — LESLIE E. ROBERTSON — No 34380 — UNIVERSITY OF THE STATE OF NEW YORK

SIGNED

DRAWN J. Adams

REVIEWED W. Brewer

19-A-985.1

SKILLING, HELLE, CHRISTIANSEN, ROBERTSON — Structural & Civil Engineers

PROJECT: THE WORLD TRADE CENTER | TITLE: TRUSS DETAILS - FL 106 | DATE: 1-7-71

REVISIONS
1/27/71
7/30/71
10/6/71
Printed 5/9/79

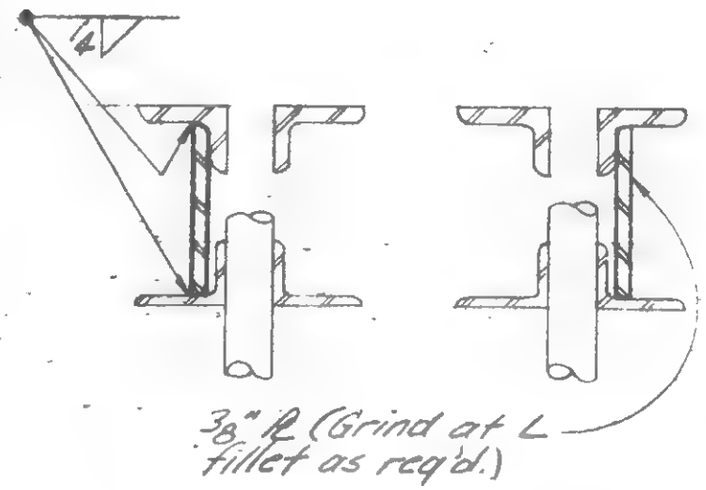


Section a-a

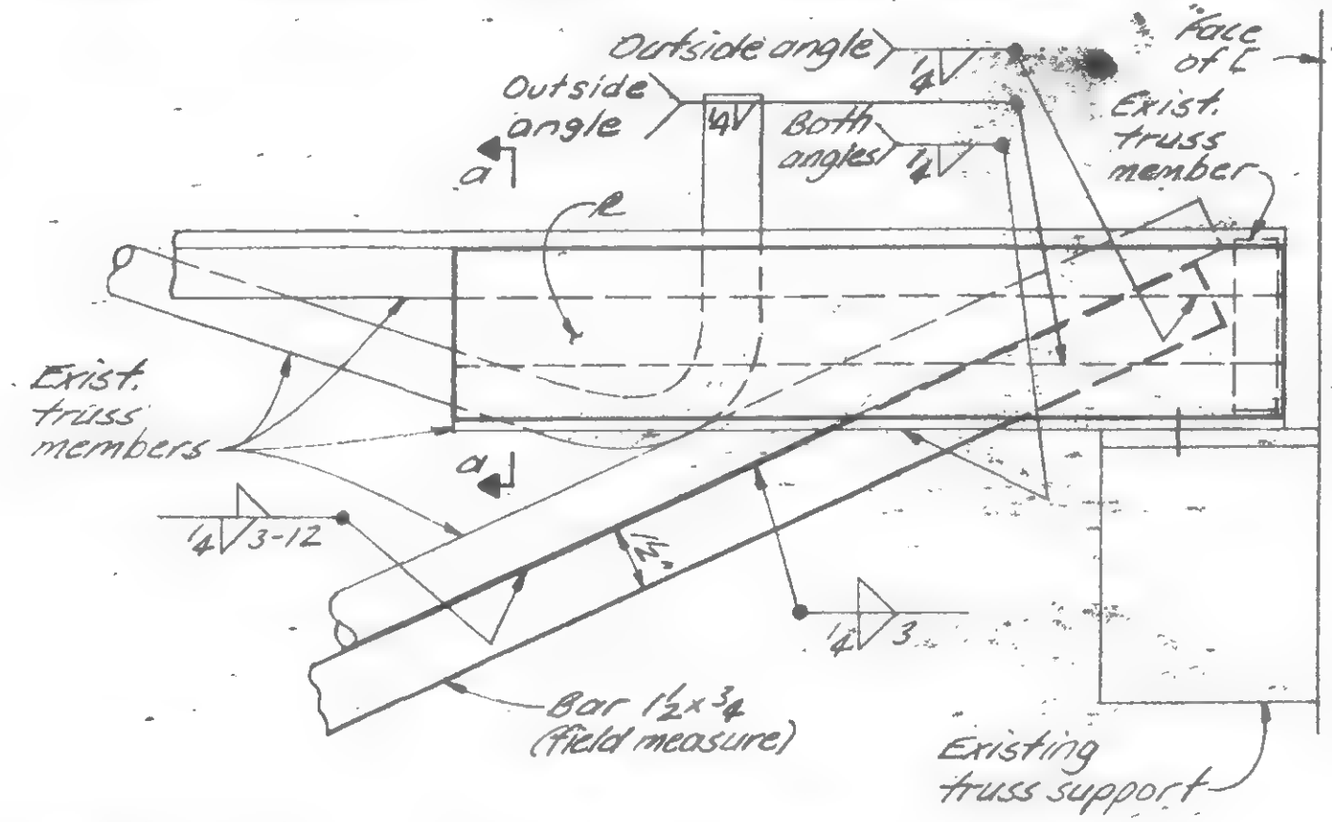


Detail 985C

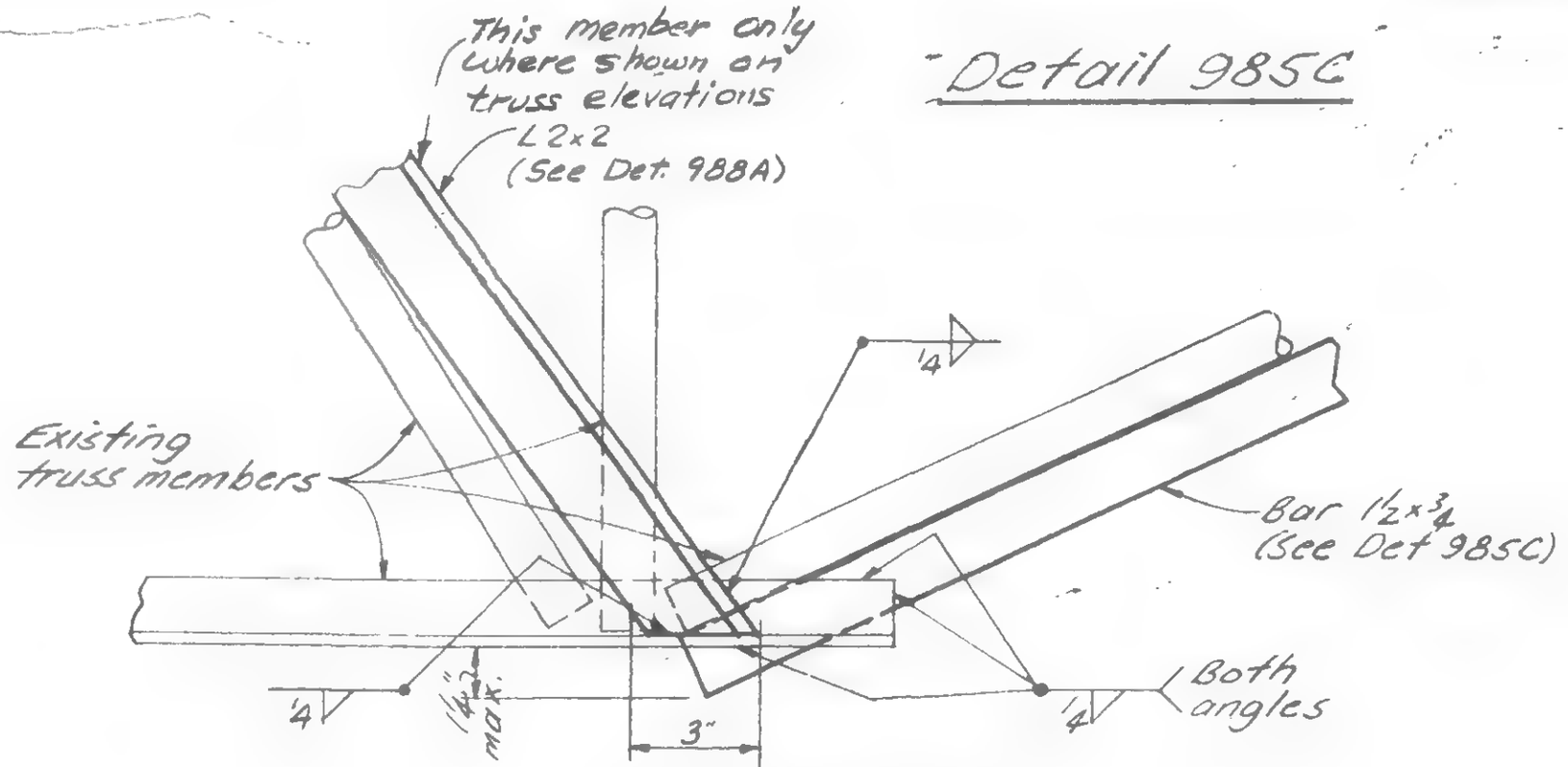


Detail 985D

LICENSED PROFESSIONAL ENGINEER — LESLIE E. ROBERTSON — No 34360 — UNIVERSITY OF THE STATE OF NEW YORK

SIGNED
DRAWN
REVIEWED

19-A-985.2

SKILLING, HELLE, CHRISTIANSEN, ROBERTSON — Structural & Civil Engineers

PROJECT: THE WORLD TRADE CENTER | TITLE: TRUSS DETAILS - FL 106 | DATE: 1-7-71

REVISIONS
1/27/71
7/30/71
10/6/71
Printed 5/9/79

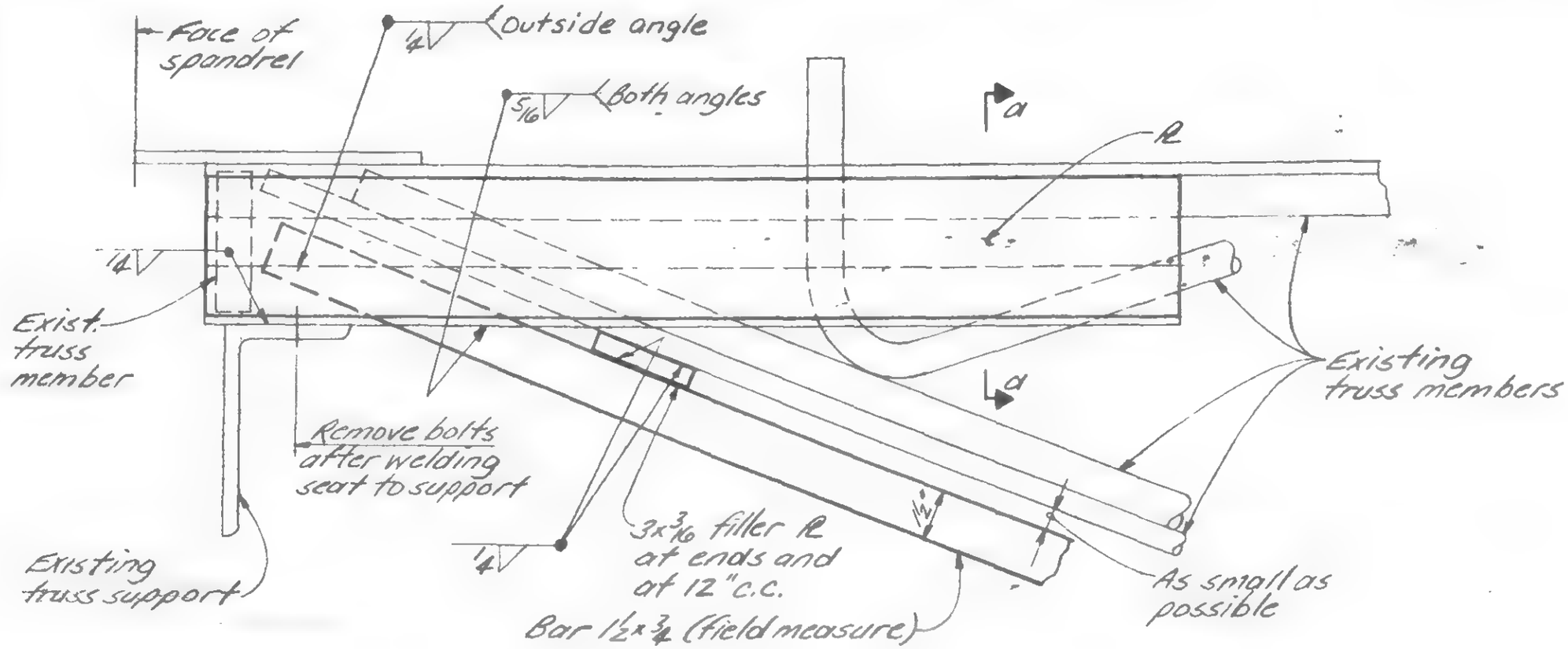


Detail 985E

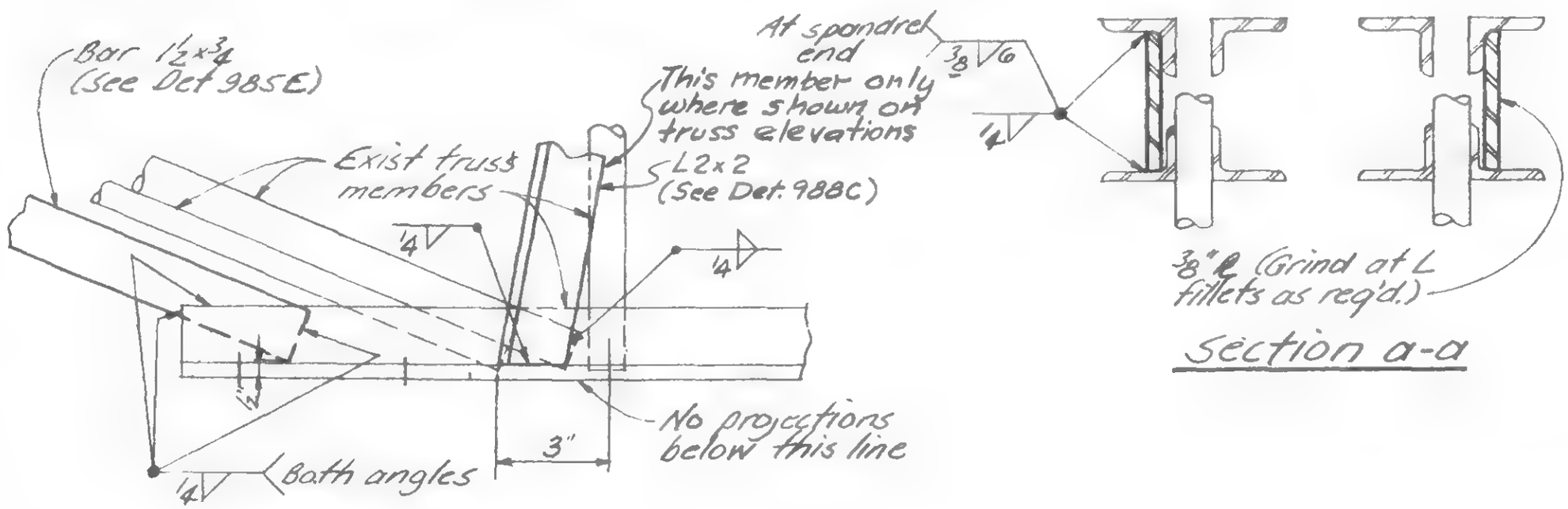


Section a-a

Detail 985F

LICENSED PROFESSIONAL ENGINEER — LESLIE E. ROBERTSON — No 34360 — UNIVERSITY OF THE STATE OF NEW YORK

DESIGNED

DRAWN J. Adams

REVIEWED W. Brown

19-A-985.3

SKILLING HELLE CHRISTIANSEN ROBERTSON — Structural & Civil Engineers

PROJECT: THE WORLD TRADE CENTER | TITLE: TRUSS DETAILS - FL 106 | DATE: 1-7-71

| REVISIONS |
|---|
| 11/21/71 |
| 7/30/71 |
| 10/6/71 |
| 5/9/79 |

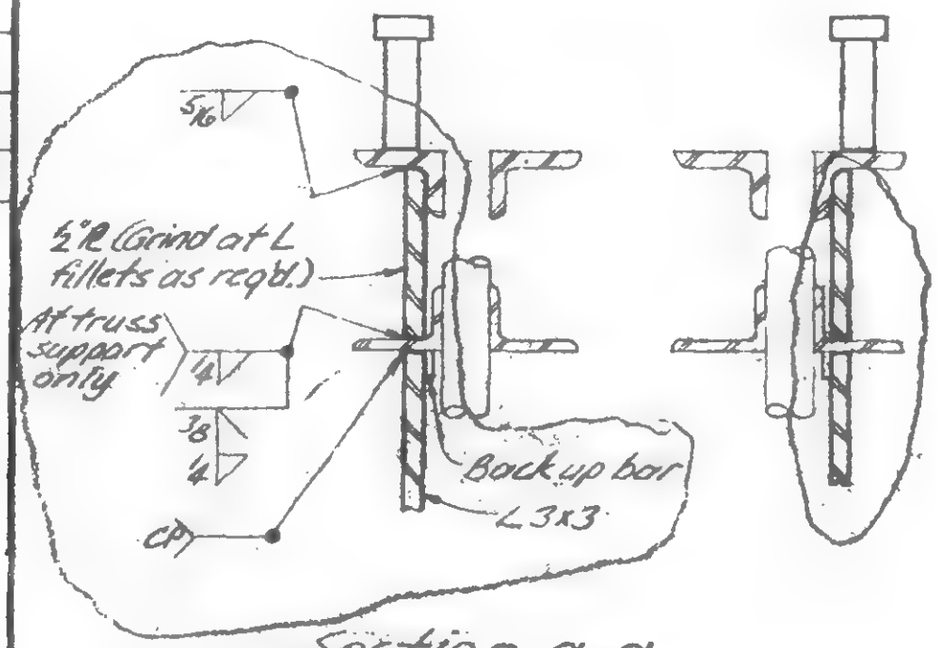


Section a-a

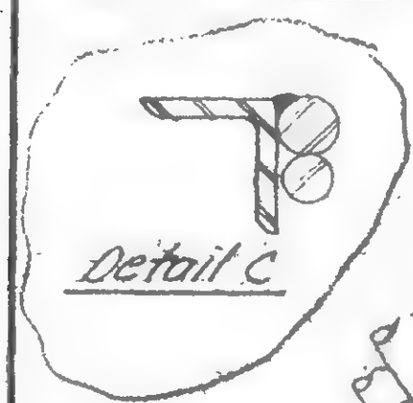

Detail C

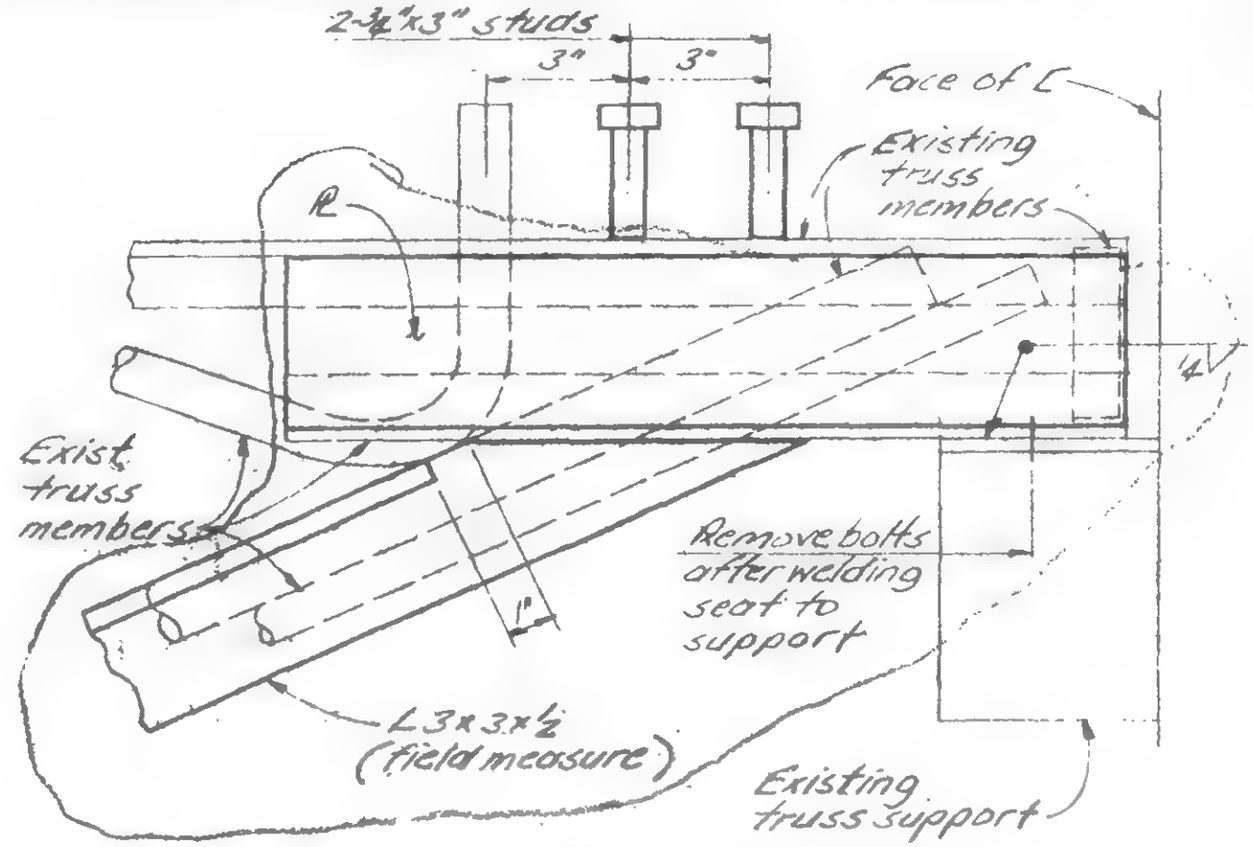


Detail 985G

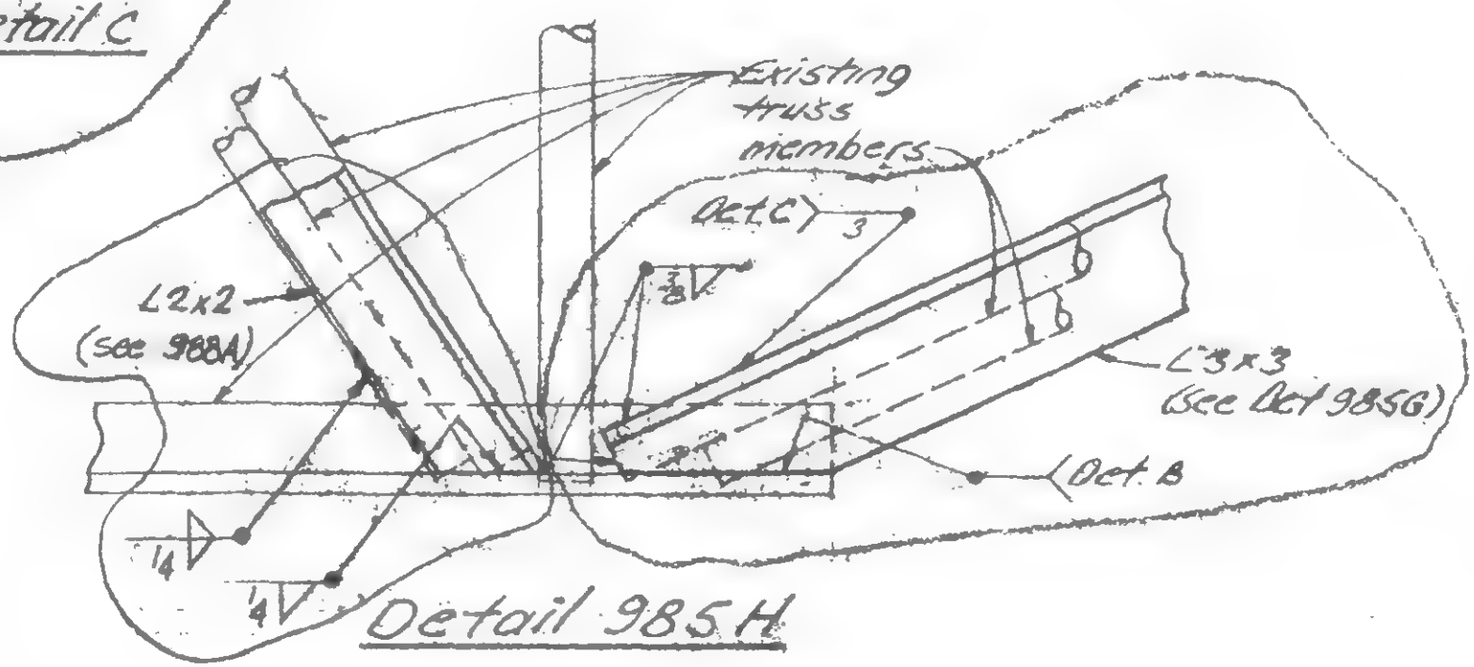


Detail 985H

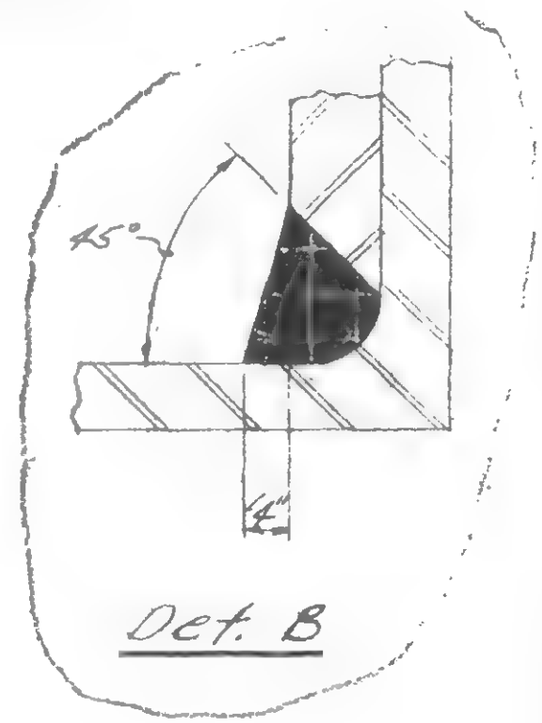


Det. B

DESIGNED

DRAWN

19-A-985.4

SELLING, HELLE CHRISTIANSEN, ROBERTSON — Structural & Civil Engineers

PROJECT: THE WORLD TRADE CENTER | TITLE: TRUSS DETAILS - FL. 106 | DATE: 5-9-79

DIVISIONS

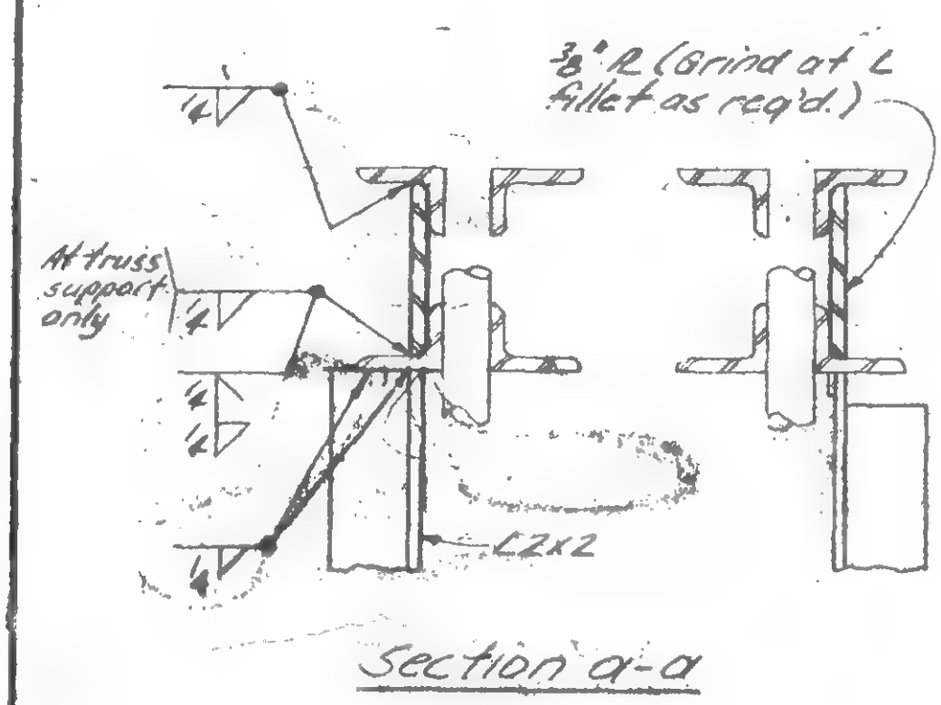


Section a-a

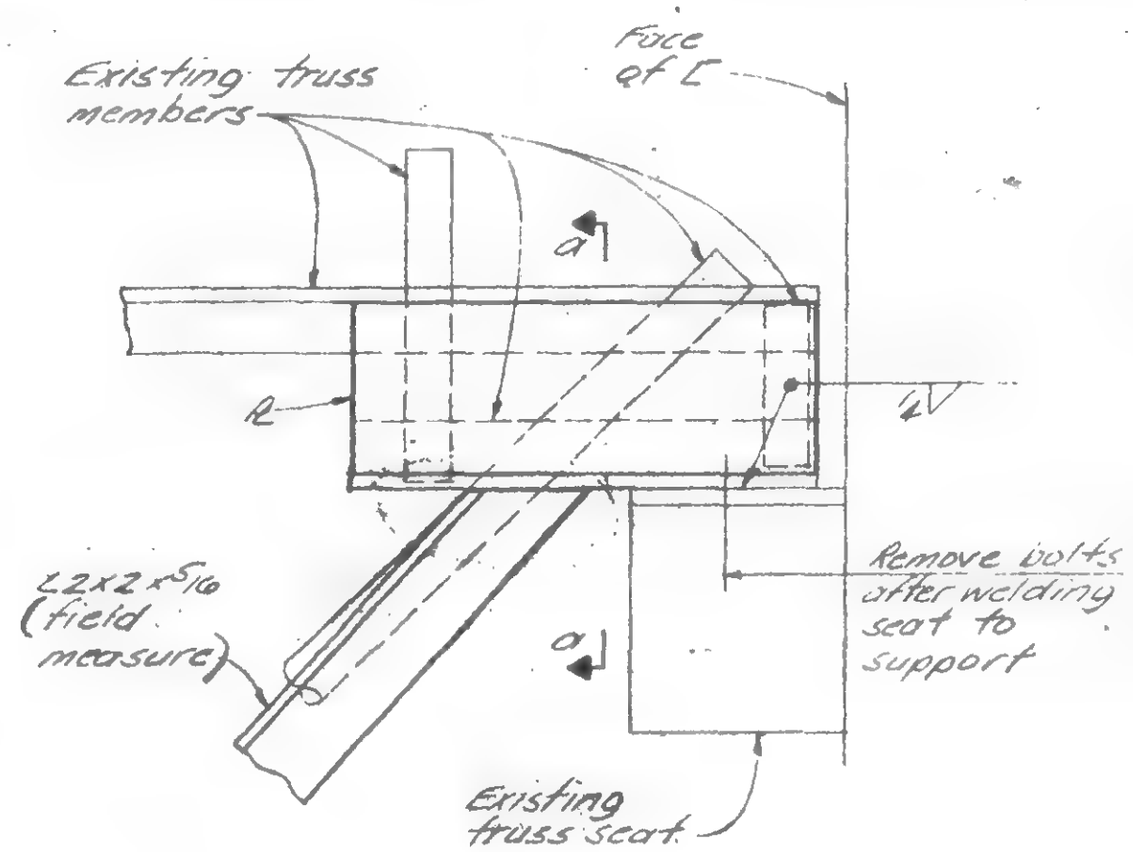


Detail 985J

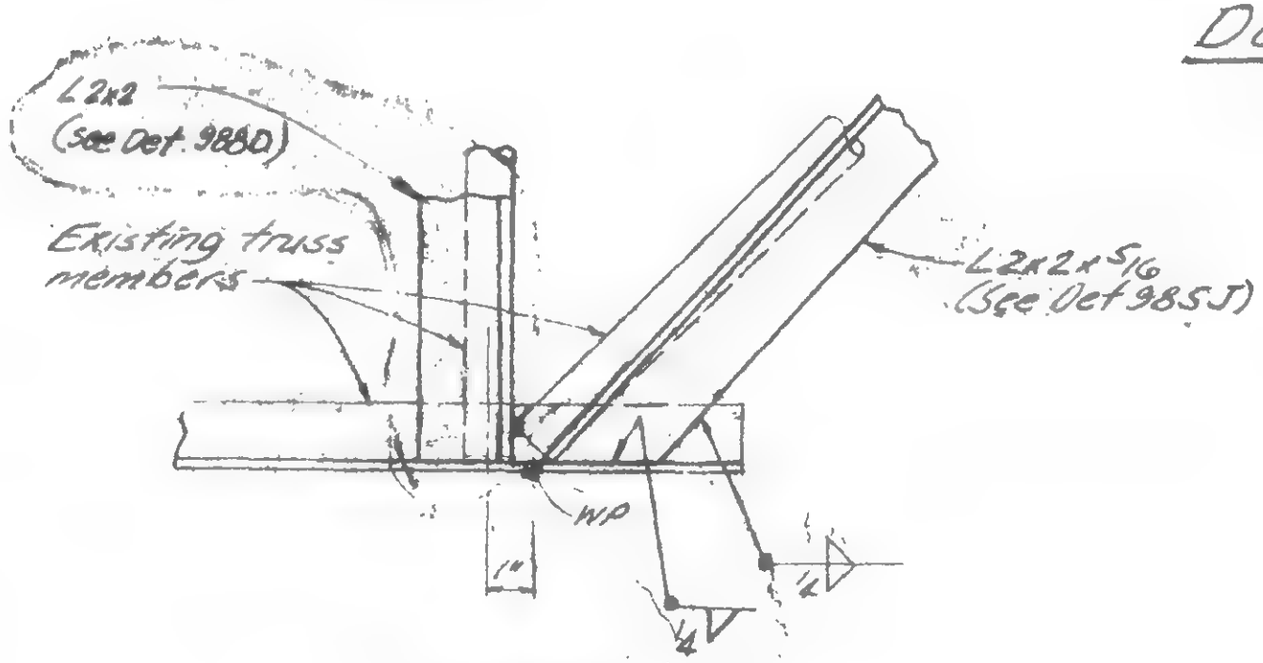


Detail 985K

DESIGNED

DRAWN: A. Adams

REVIEWED: WAB

19-A-985.5

SKILLING, HELLE, CHRISTIANSEN, ROBERTSON — Structural & Civil Engineers

PROJECT: THE WORLD TRADE CENTER | TITLE: TRUSS DETAILS - FL 106 | DATE: 1-7-71

REVISIONS

1/21/71
7/30/71
10/6/71
5/9/79

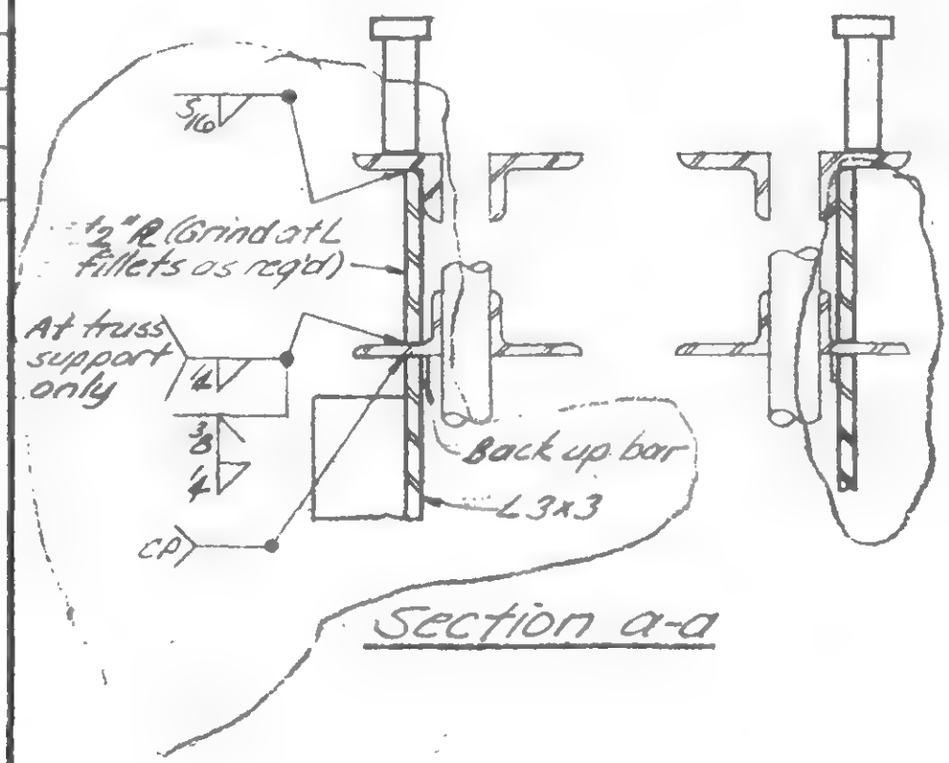


Section a-a

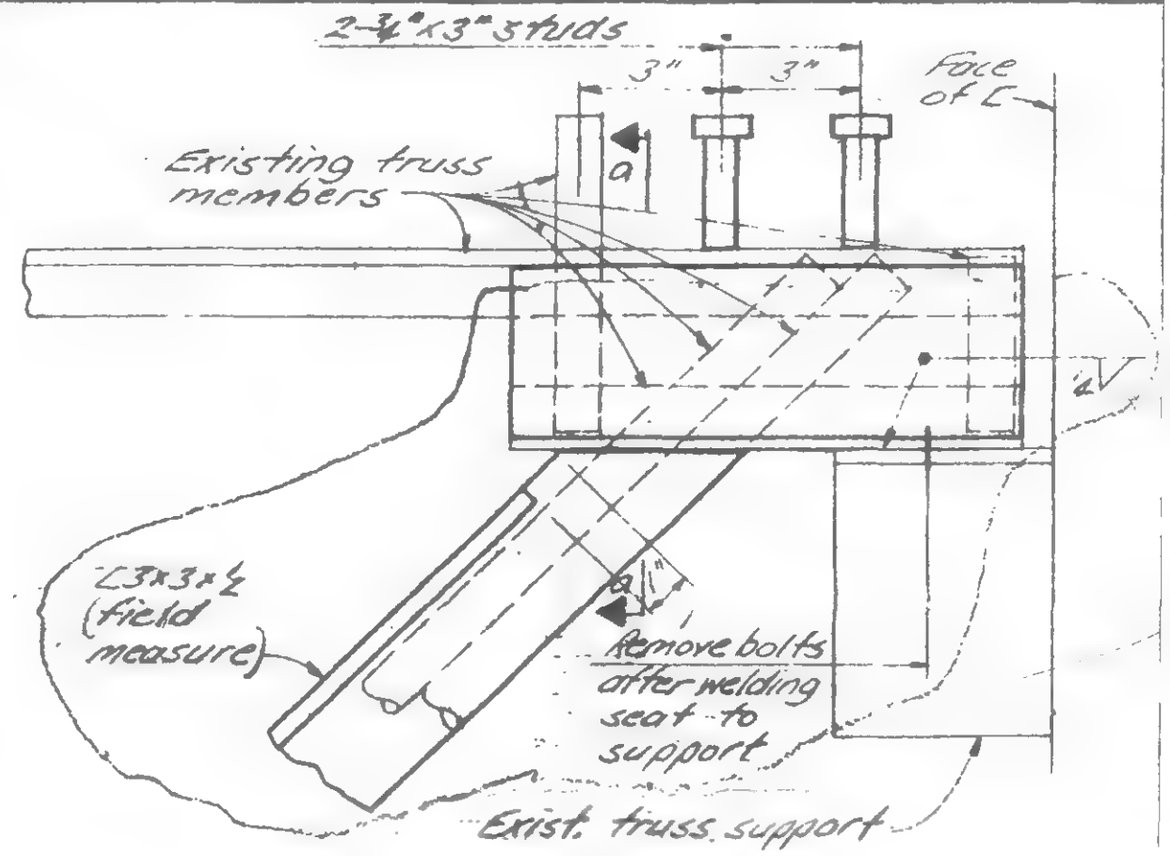


Detail 985L

LICENSED PROFESSIONAL ENGINEER
LESLIE E. ROBERTSON
NO 34360
UNIVERSITY OF THE STATE OF NEW YORK

DESIGNED

DRAWN J. Harris

REVIEWED WAB

12-A-3856

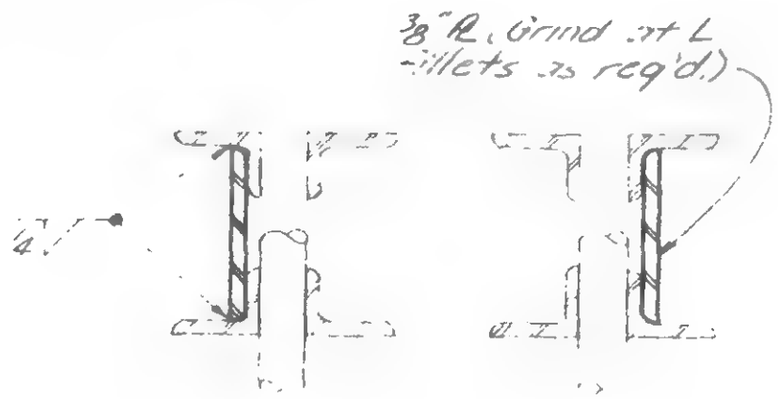


Section a-a

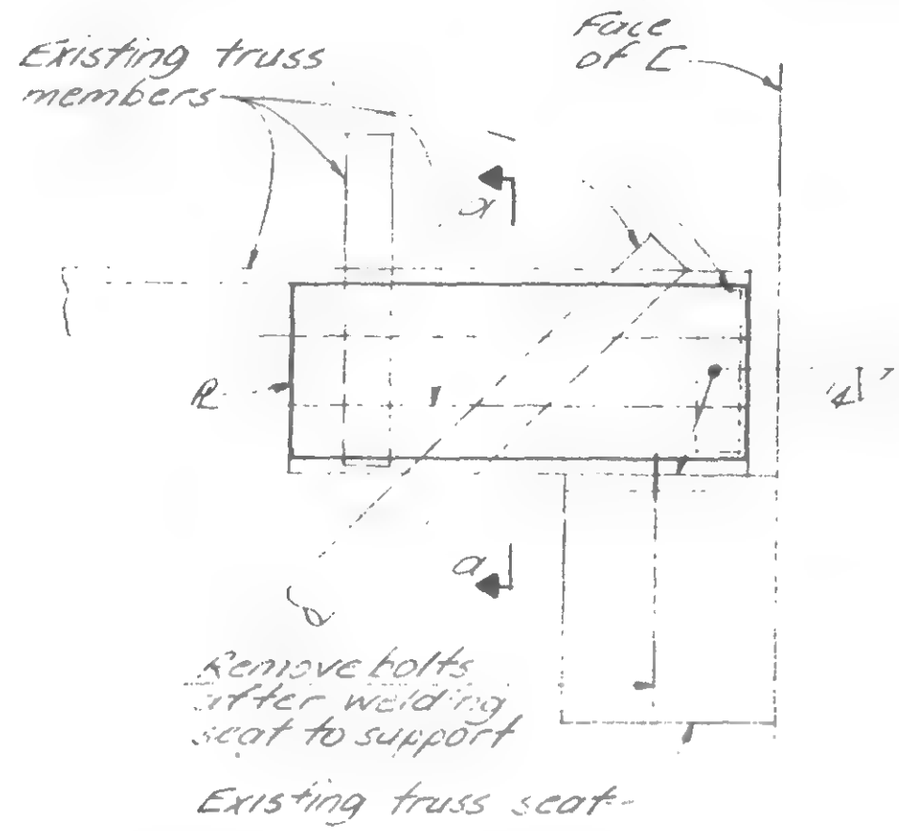


Detail 985N

DRAWN
REVIEWED

19-A-985.7

SKILLING, HELLE, CHRISTIANSEN, ROBERTSON — Structural & Civil Engineers

PROJECT: THE WORLD TRADE CENTER | TITLE: TRUSS DETAILS - FL.106 | DATE: 5/9/79

REVISIONS

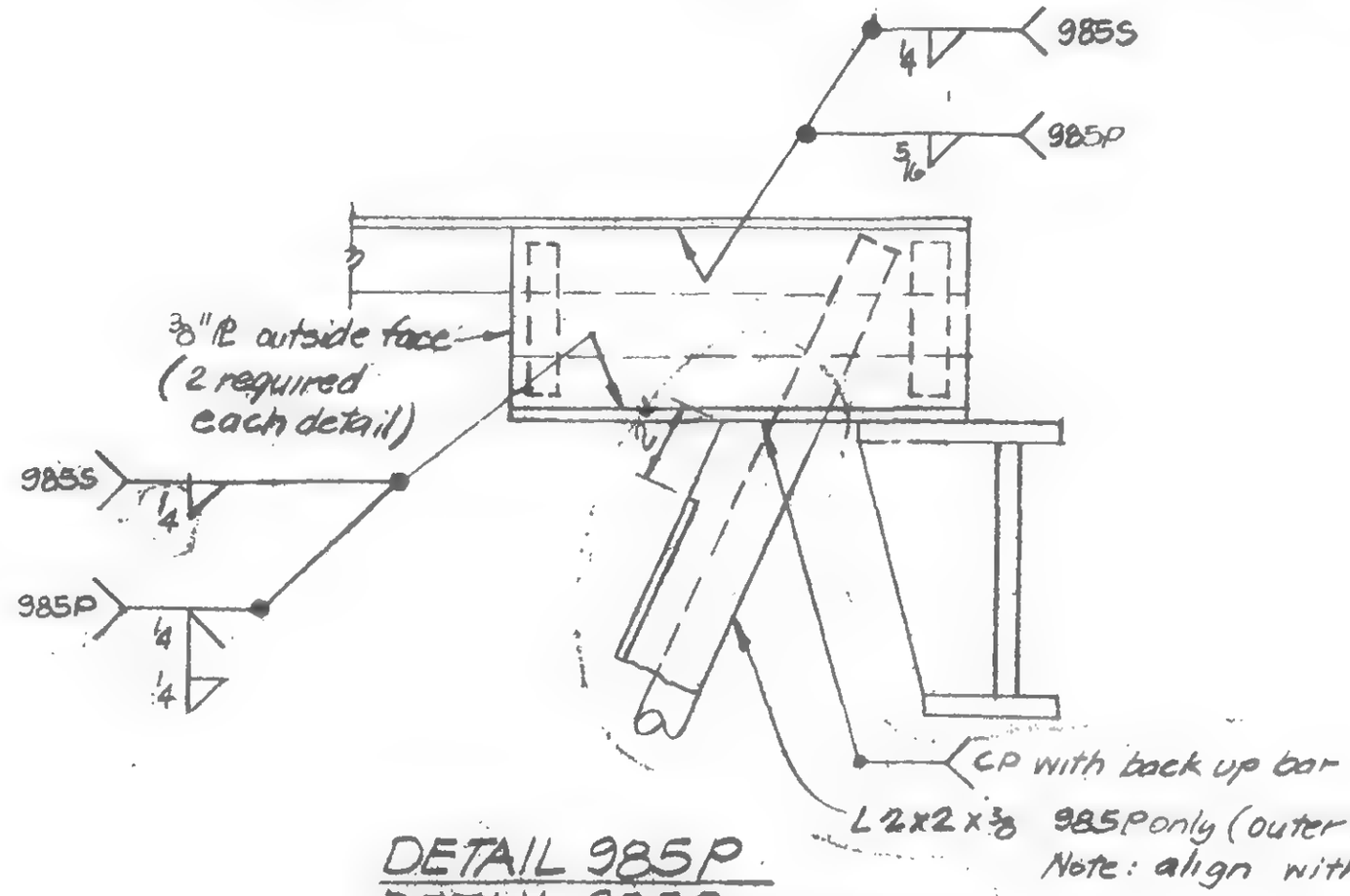


DETAIL 985P
DETAIL 985S as noted

DESIGNED

DRAWN Porche

DESIGNING DJCB

19-A-985.8

PROJECT THE WORLD TRADE CENTER | TITLE TRUSS DETAILS - FL. 106 | DATE 5/9/79

REVISIONS

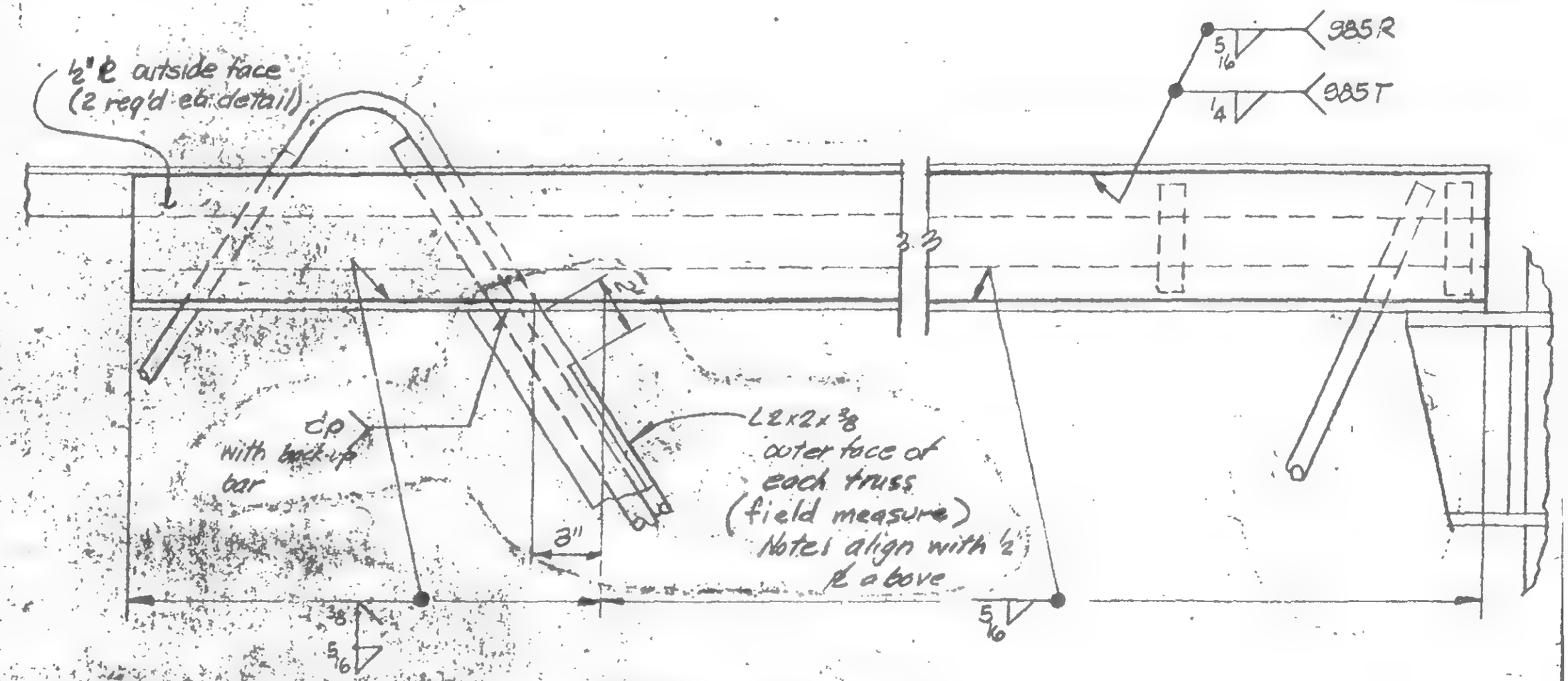


DETAIL 985 R & T

LICENSED PROFESSIONAL ENGINEER
WILLIE E. ROBERTSON
No. 34360
STATE OF NEW YORK

DESIGNED

DRAWN P. Oeder

REVIEWED WEB

19-A-985.9

SKILLING, HELLE, CHRISTIANSEN, ROBERTSON — Structural & Civil Engineers

VV / C 444.00

PROJECT: THE WORLD TRADE CENTER | TITLE: TRUSS DETAILS - FL 106 | DATE: 5/9/79

VISIONS

11.30.79

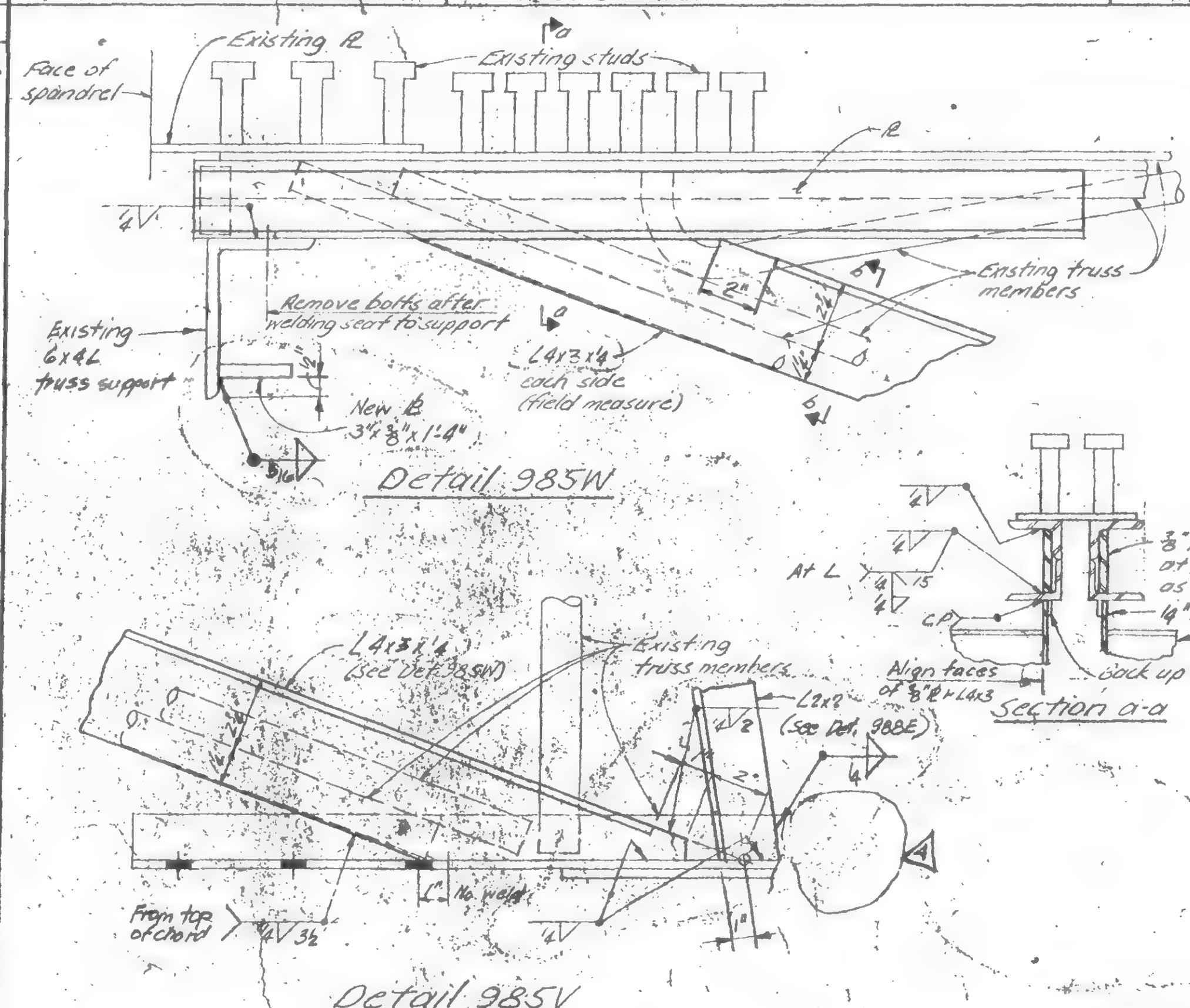


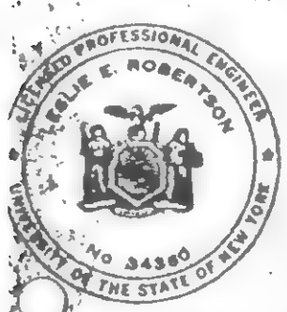


DESIGNED

DRAWN

REVIEWED

19-A-985.10

SKILLING, HELLE, CHRISTIANSEN, ROBERTSON — Structural & Civil Engineers

WTC 444.0

PROJECT: THE WORLD TRADE CENTER

TITLE: TRUSS DETAILS - FL 106

DATE: 5/9/79

REVISIONS

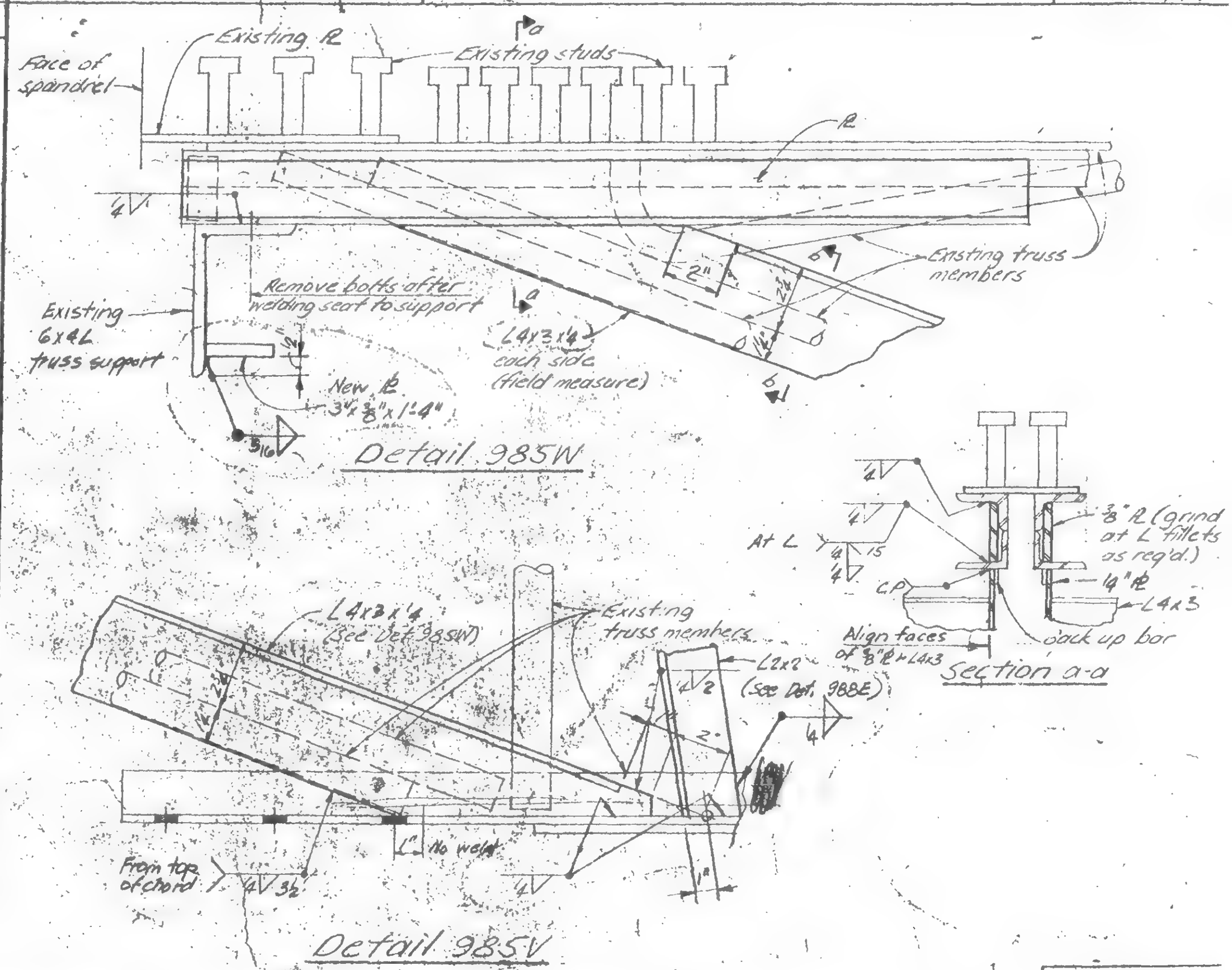


DESIGNED

DRAWN

REVIEWED

19-A-985.10

SKILLING, HELLE, CHRISTIANSEN, ROBERTSON — Structural & Civil Engineers

WTC 444.00

PROJECT: THE WORLD TRADE CENTER

TITLE: FL. 106 - Stud Details

DATE: 1-7-71

REVISIONS

5/9/79

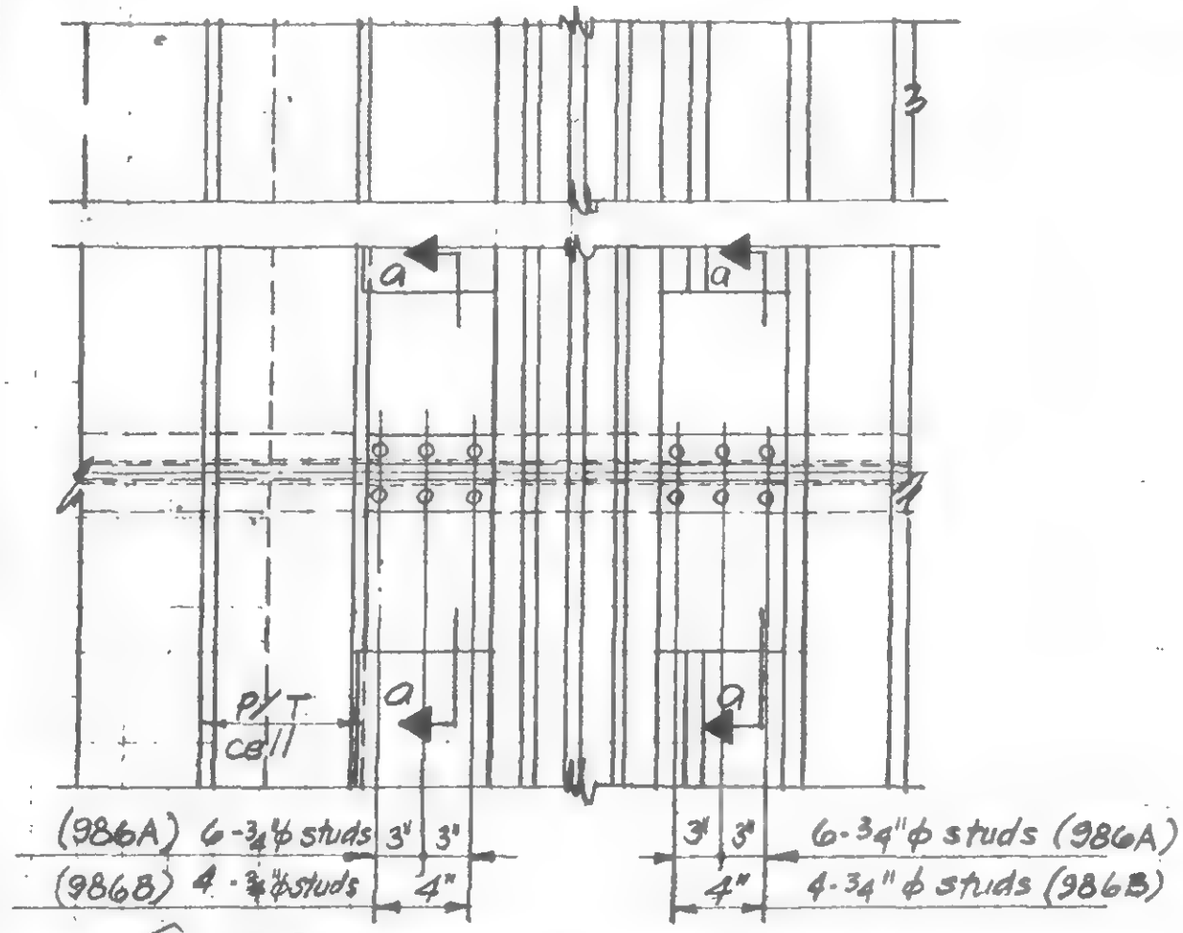


Existing Plan Detail 986A & B

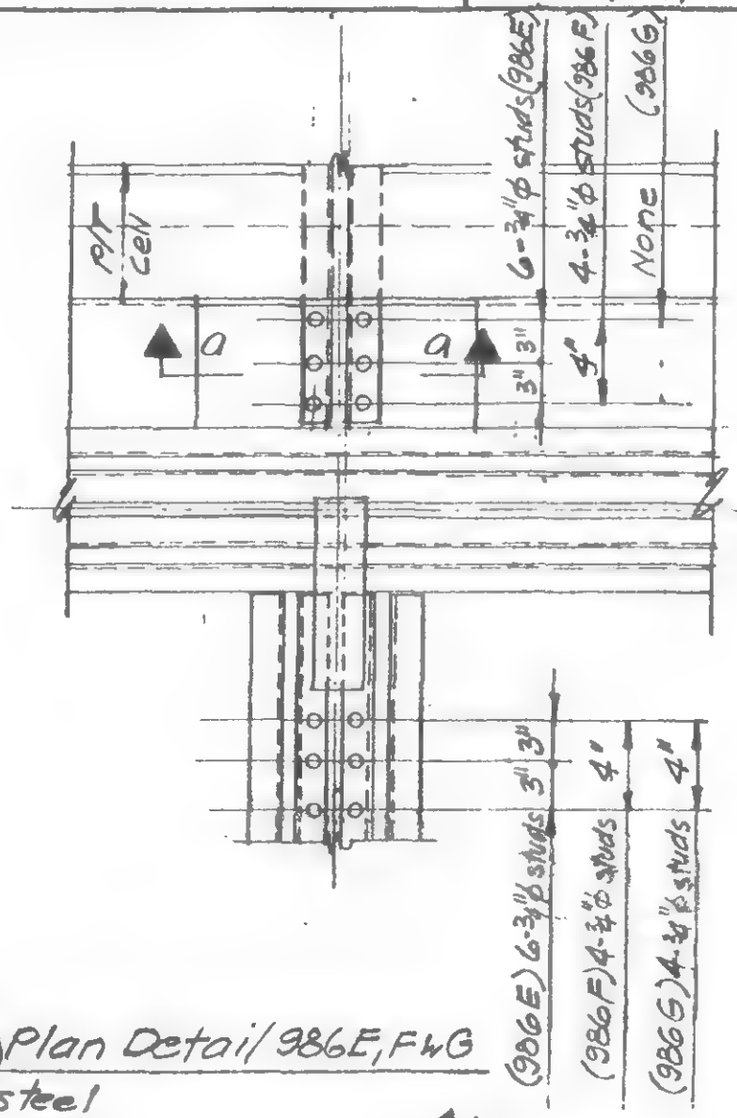


Existing Plan Detail 986E, F & G

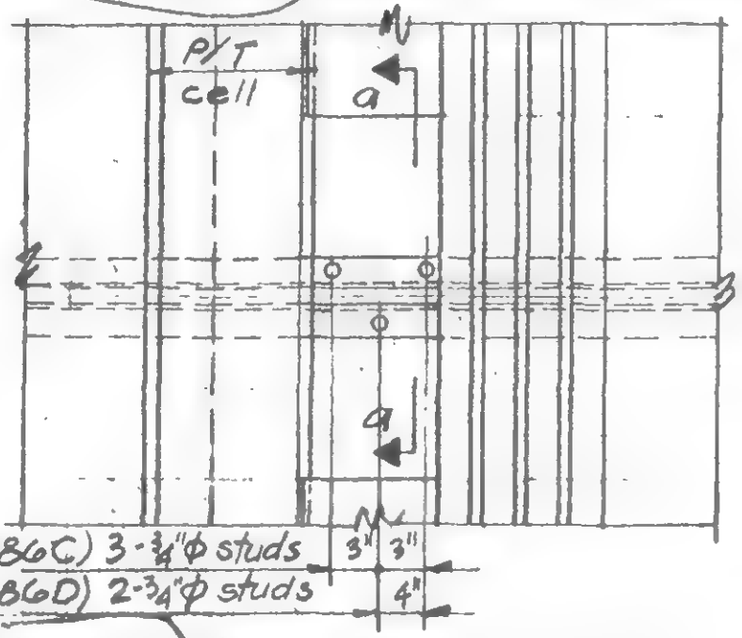


Existing Plan Detail C & D

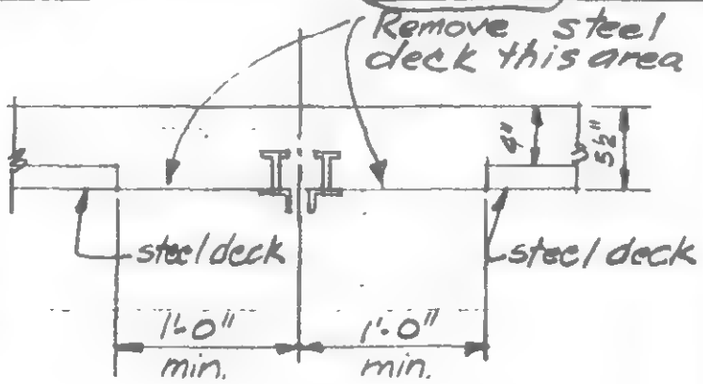


Section a-a

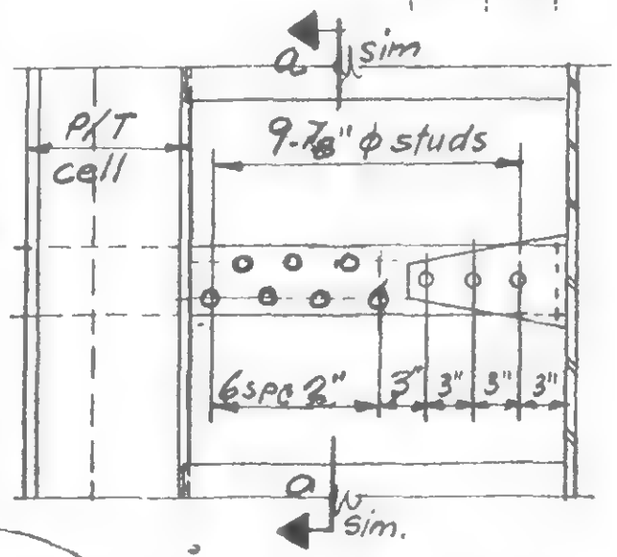


Existing Plan Detail 986H

LICENSED PROFESSIONAL ENGINEER LESLIE E. ROBERTSON No 34360 UNIVERSITY OF THE STATE OF NEW YORK

DESIGNED WAB

DRAWN

REVIEWED WAB

19-A-986

SKILLING, HELLE, CHRISTIANSEN, ROBERTSON — Structural & Civil Engineers

WTC 444.00

PROJECT: THE WORLD TRADE CENTER

TITLE: FL. 106 CONNECTION DETAILS

DATE: 1-7-71

REVISIONS

1/27/71
7/28/71
10/6/71
5/9/79
11/30/79 △4

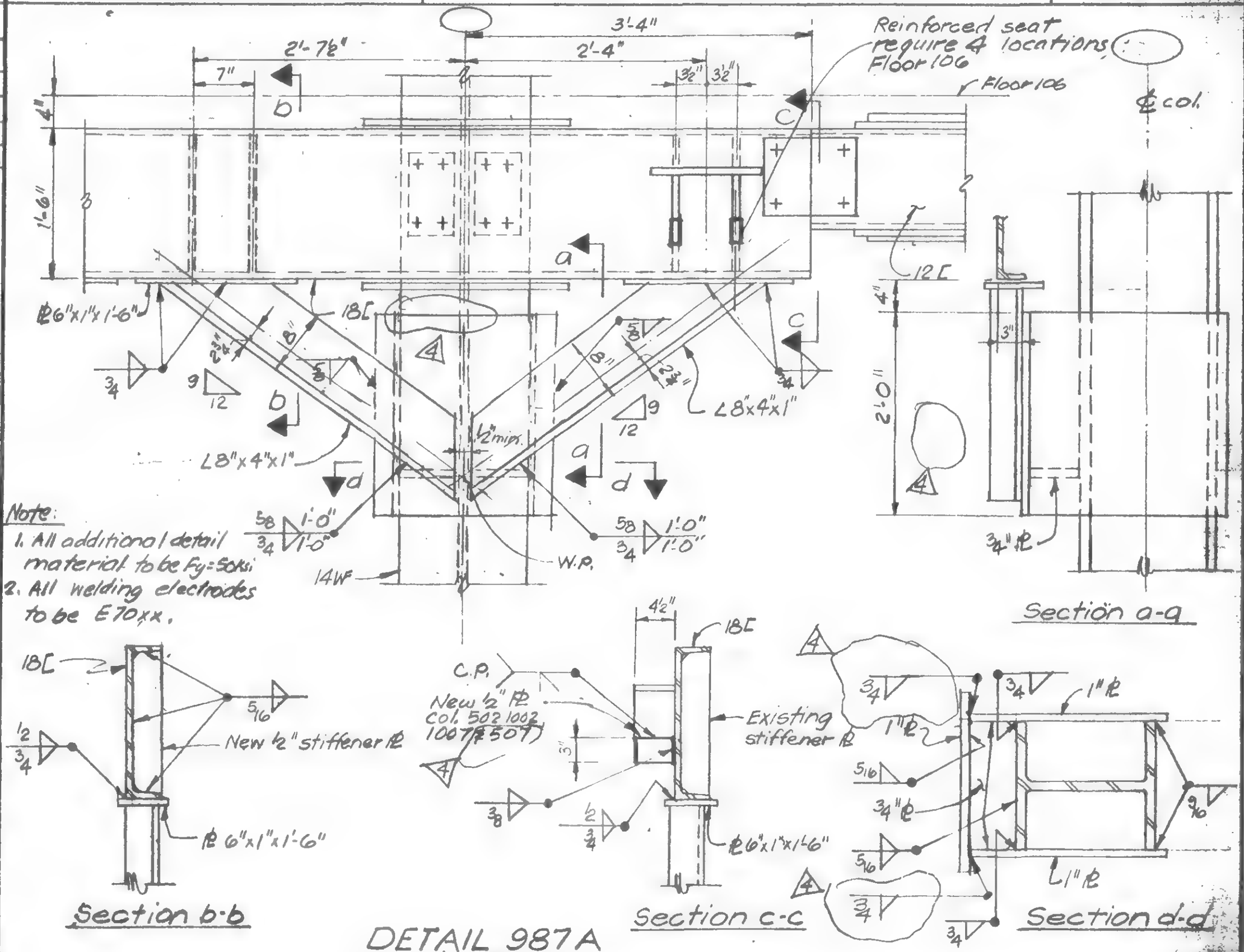


Note:
1. All additional detail material to be Fy=50ksi
2. All welding electrodes to be E70xx.

# DETAIL 987A

@ col. 1002, as shown existing
@ col. 502 & 1007 similar existing @ col. 507 sim. new

19-A-987

DRAWN S.C.

REVIEWED W. Brewer

LICENSED PROFESSIONAL ENGINEER LESLIE E. ROBERTSON No 34360 UNIVERSITY OF THE STATE OF NEW YORK

SKILLING, HELLE, CHRISTIANSEN, ROBERTSON — Structural & Civil Engineers

WTC 444.00

PROJECT: THE WORLD TRADE CENTER

TITLE: FL. 106 CONNECTION DETAILS

DATE: 1-7-71

REVISIONS

Printed 7/30/71

10/6/71

5/9/79

11-30-79 4

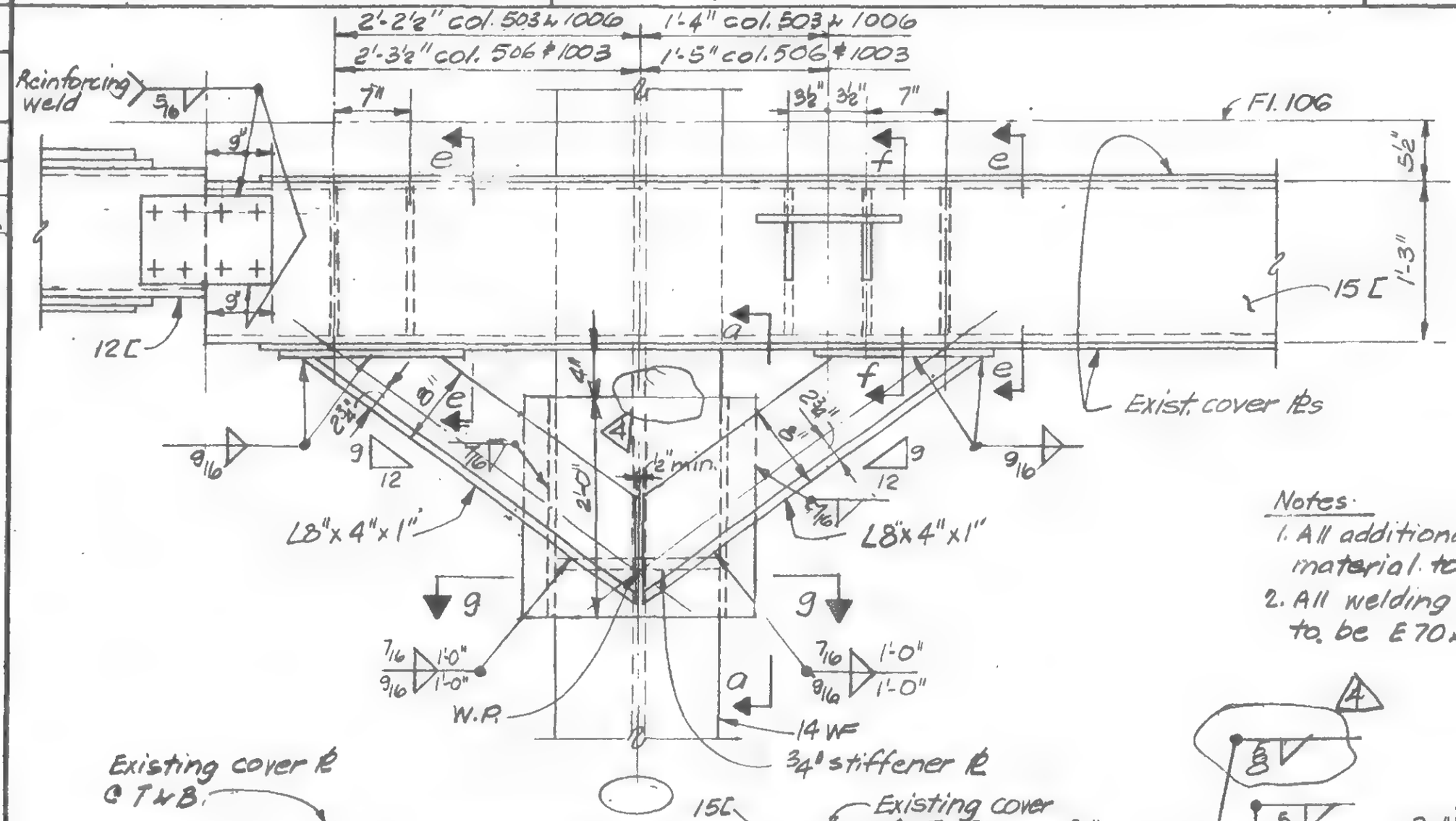


Notes:

1. All additional detail material to be Fy=50ksi
2. All welding electrodes to be E70xx.

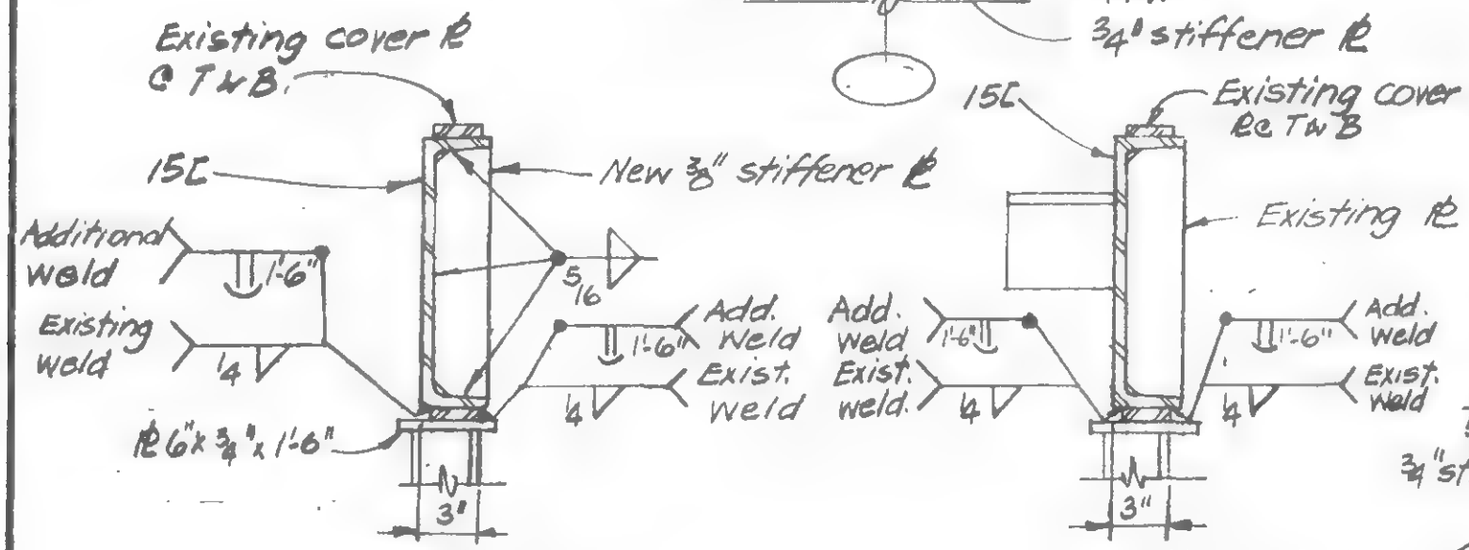


Section e-e




Section f-f

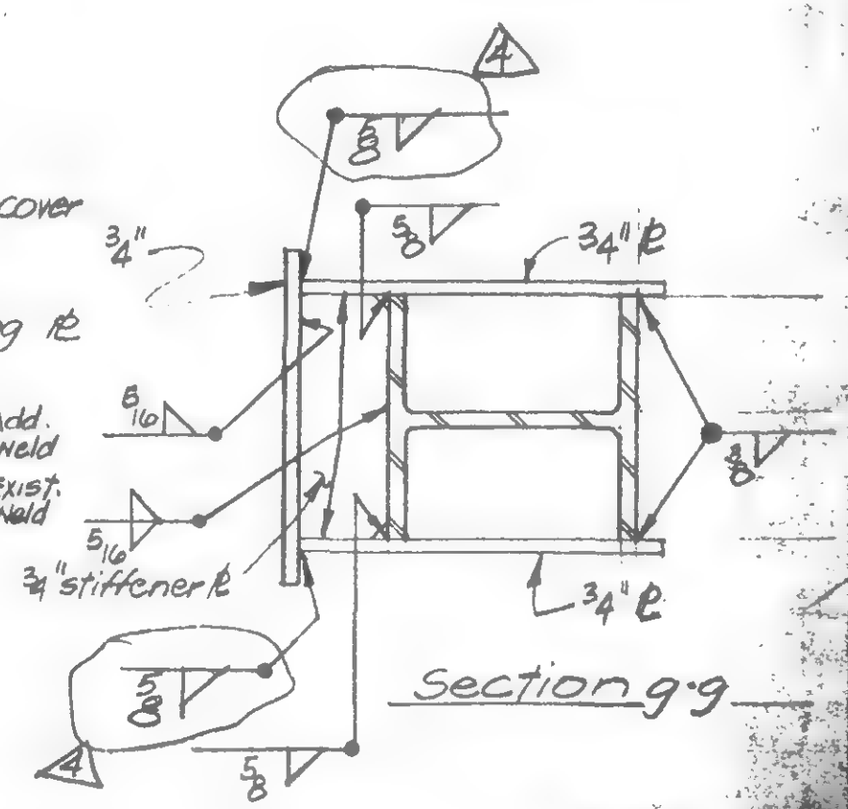


Section g-g

DETAIL 987B

@ col. 1003, as shown existing

LICENSED PROFESSIONAL ENGINEER — LESLIE E. ROBERTSON — No. 34360 — THE STATE OF NEW YORK

DESIGNED

DRAWN S.C.

SKILLING, HELLE, CHRISTIANSEN, ROBERTSON — Structural & Civil Engineers

PROJECT: THE WORLD TRADE CENTER | TITLE: FL. 106 CONNECTION DETAILS | DATE: 1-7-71

REVISIONS
7/30/71
10/6/71
5/9/79

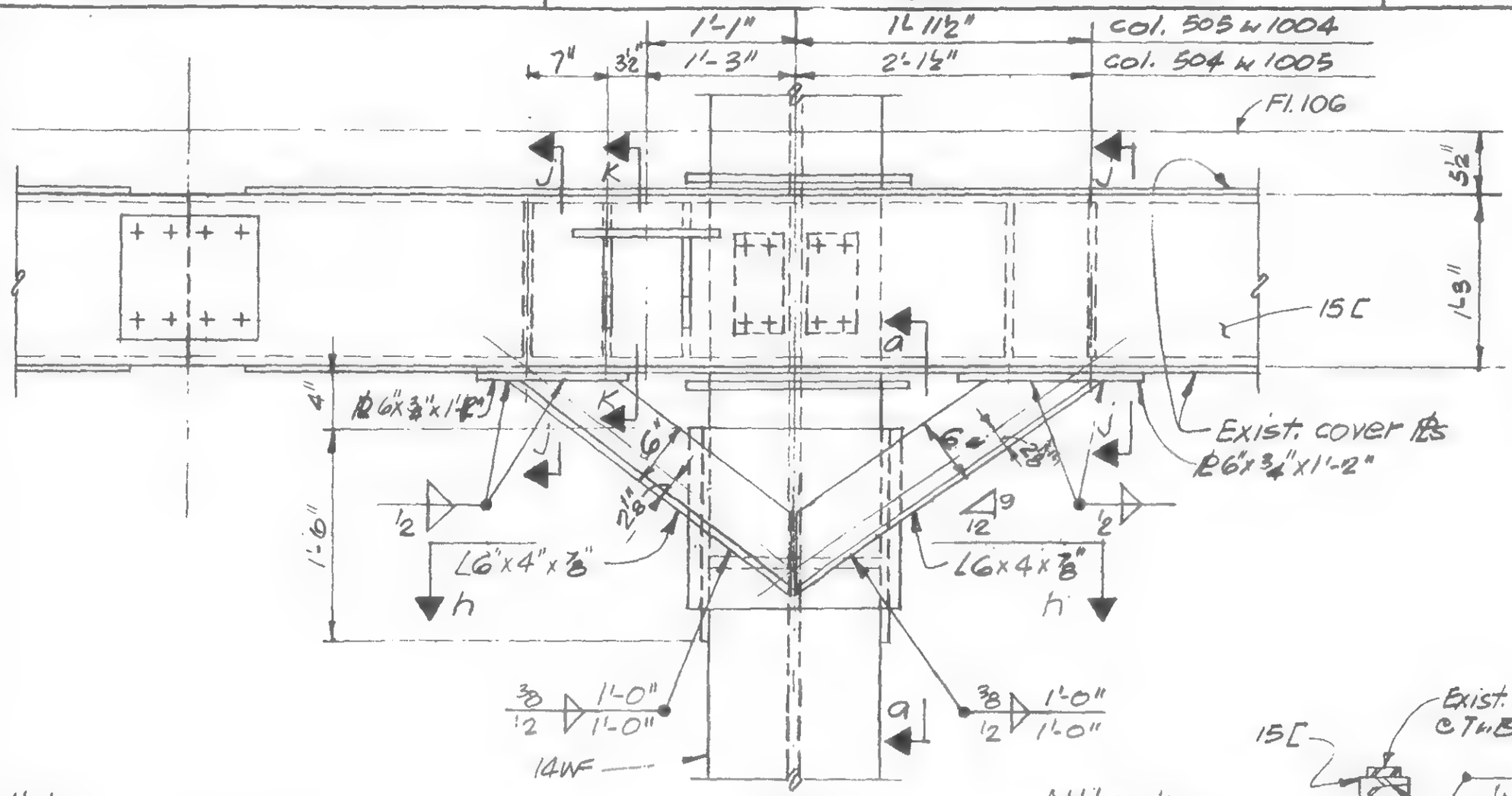


Notes:
1. All additional detail material to be $F_y$=50ksi.
2. All welding electrodes to be E70xx

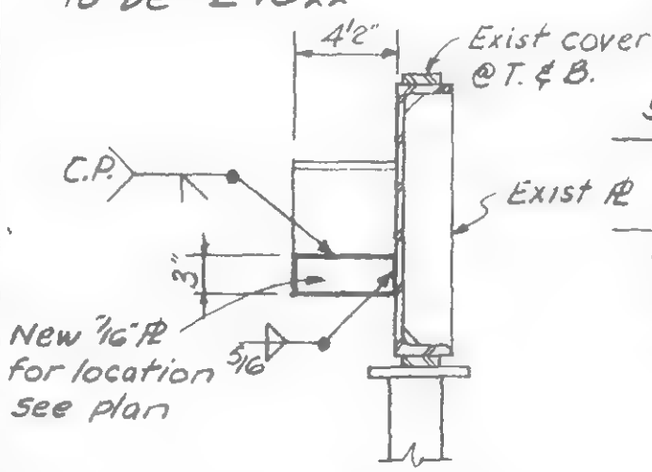


Section K-K

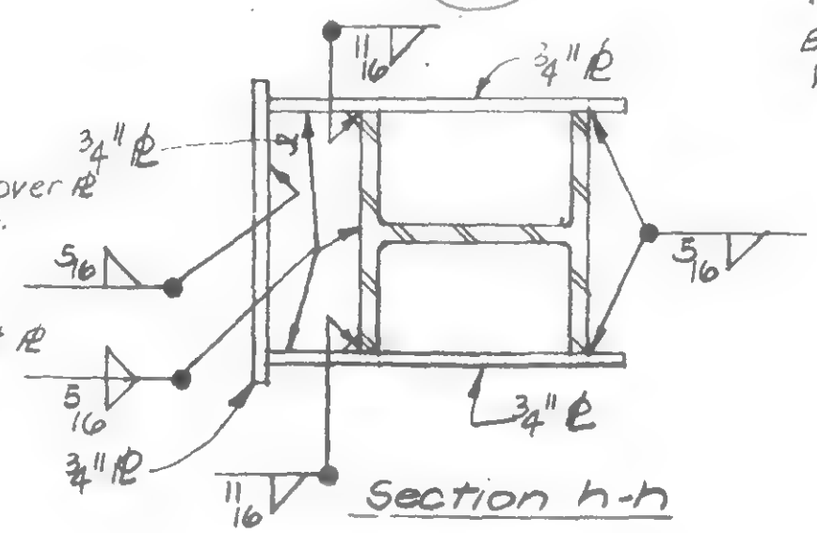


Section h-h

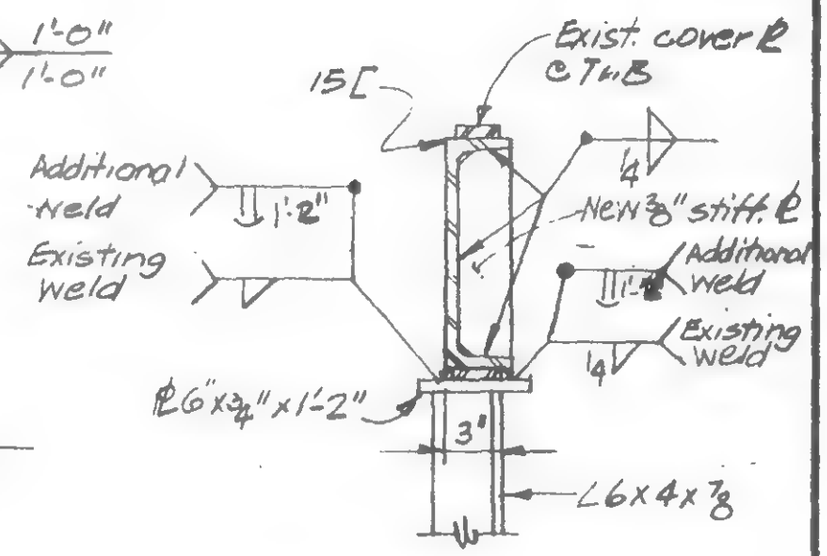


Section j-j

DETAIL 987 C
@ col. 1005, as shown existing
@ col. 504, 505 & 1004, similar existing

19-A-987.3

DESIGNED
DRAWN S.C.
REVIEWED

SKILLING, HELLE CHRISTIANSEN, ROBERTSON — Structural & Civil Engineers

PROJECT: THE WORLD TRADE CENTER | TITLE: FL. 106 CONNECTION DETAILS | DATE: 5/9/79 R

REVISIONS

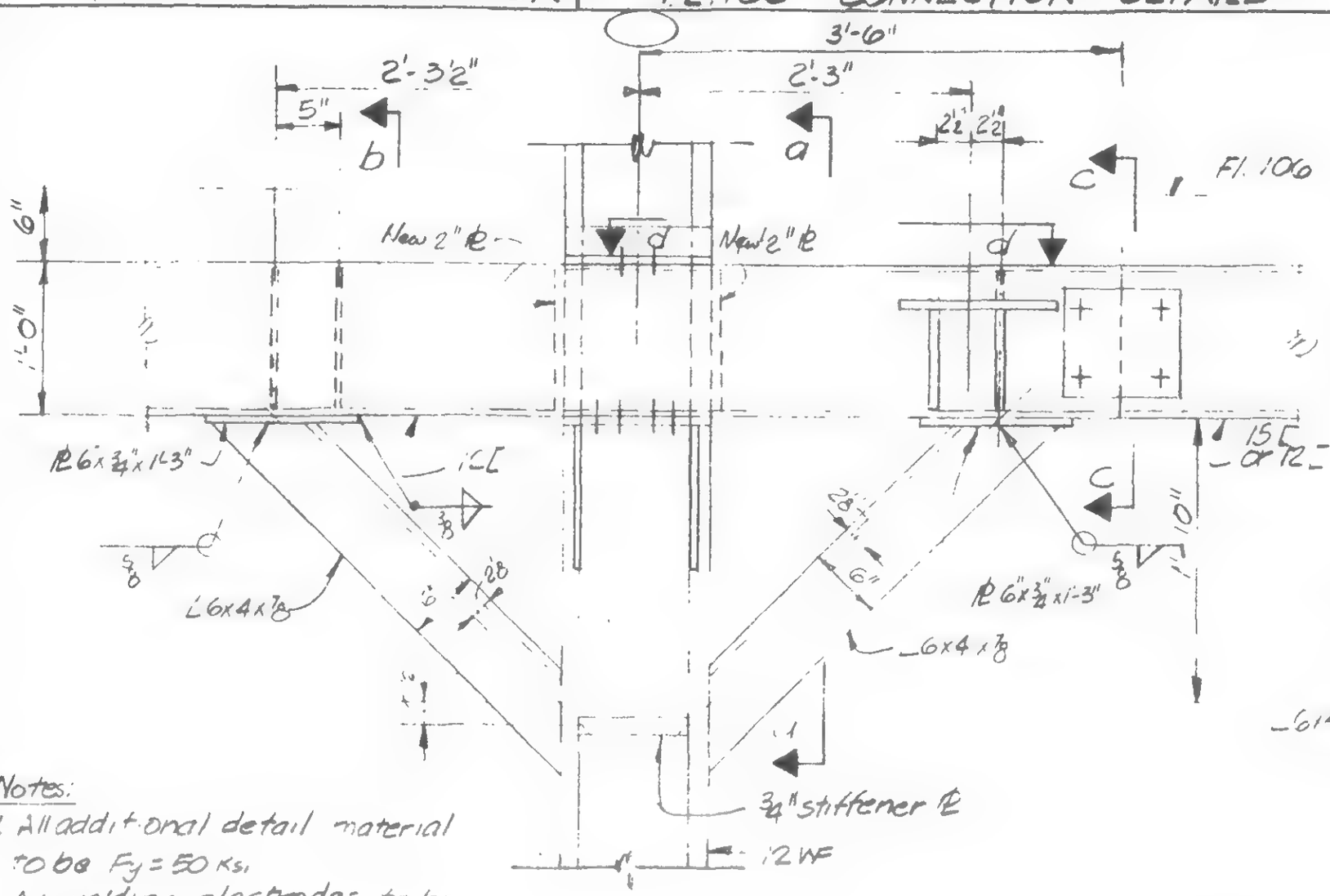


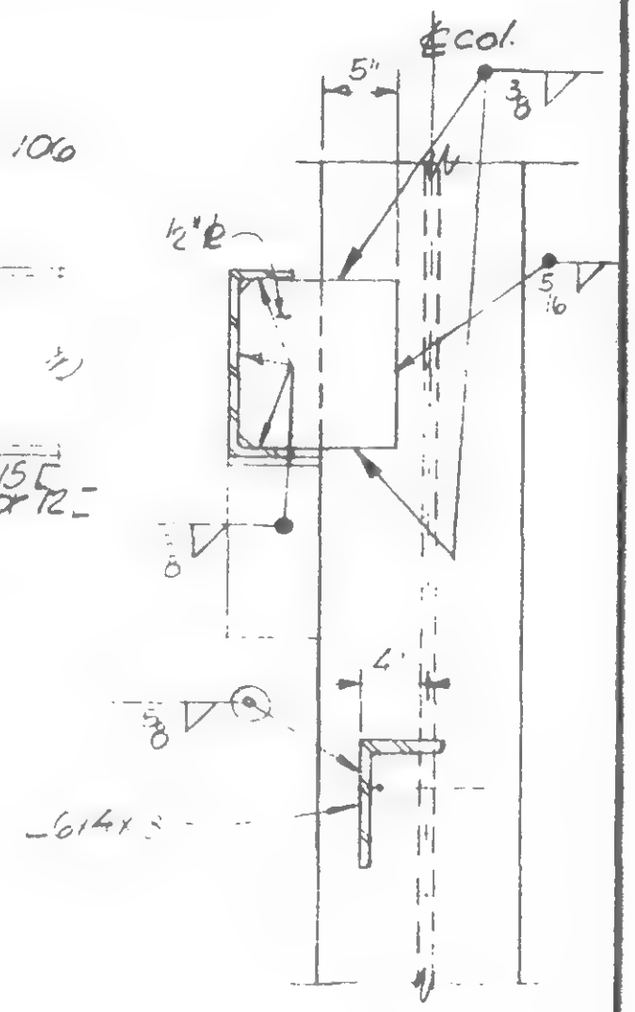


Section a-a

Notes:
1. All additional detail material to be $F_y = 50$ ksi
2. All welding electrodes to be E70xx.

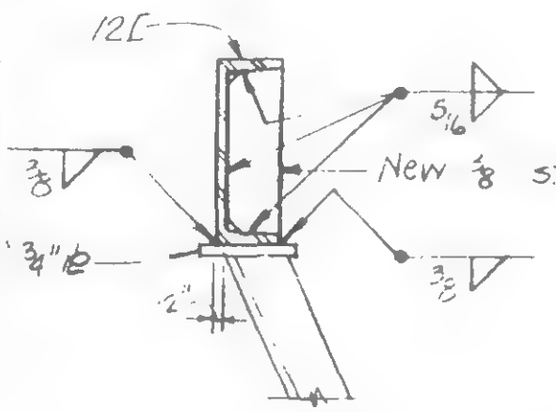


Section b-b

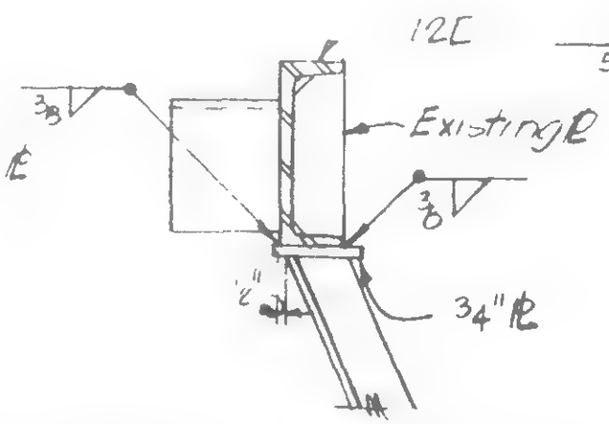


Section c-c

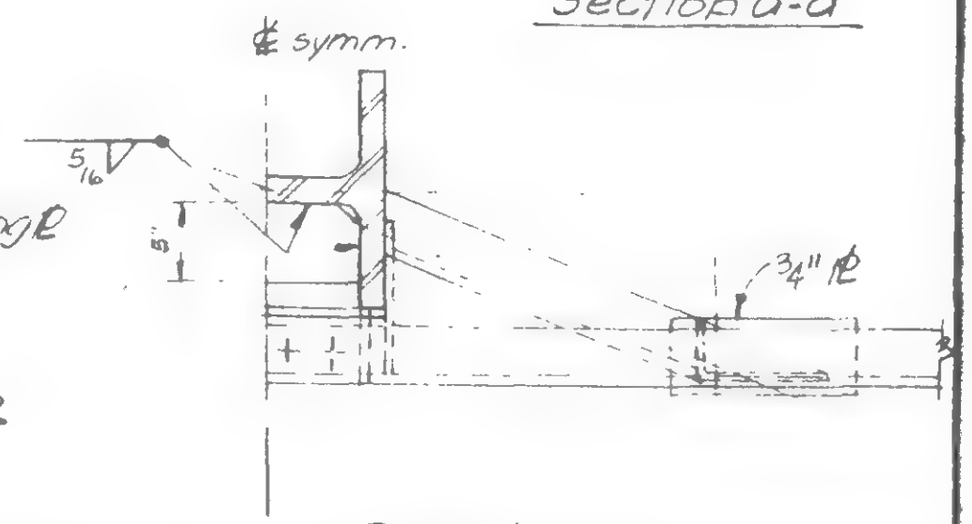


Section d-d

DETAIL 987D

@ col 601, as shown Reinf. not required
@ col 608, 901 & 908, similar New

19-A-987.4

LICENSED PROFESSIONAL ENGINEER — LESLIE E. ROBERTSON — No 34360 — UNIVERSITY OF THE STATE OF NEW YORK

SIGNED

DRAWN PDeb

REVIEWED DOB

SKILLING, HELLE, CHRISTIANSEN, ROBERTSON — Structural & Civil Engineers

WTC 444.00

PROJECT: THE WORLD TRADE CENTER

TITLE: FL. 106 CONNECTION DETAILS

DATE: 5-9-79 R

REVISIONS

11-30-79 4

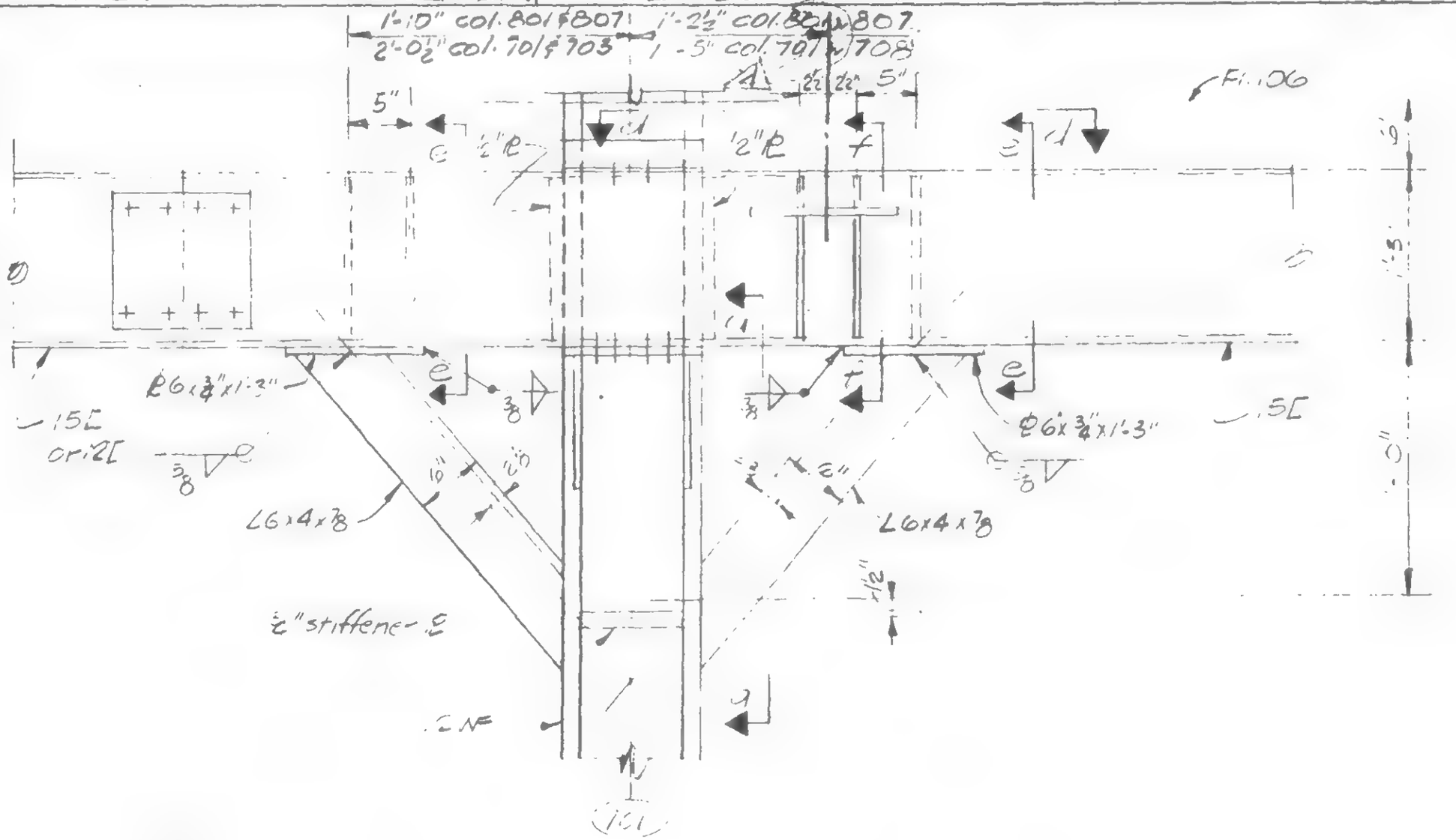


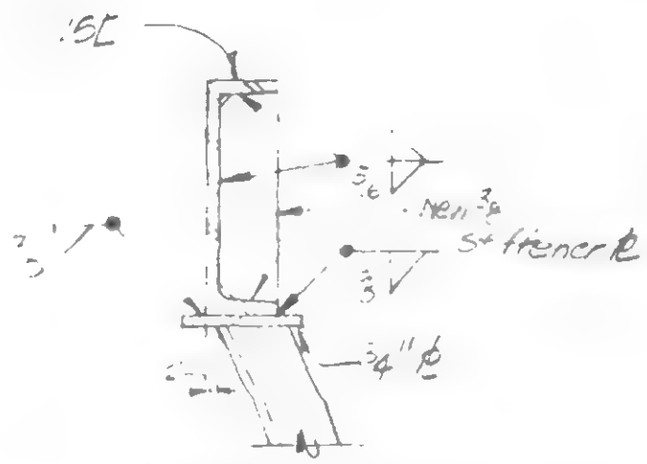


Section e-e

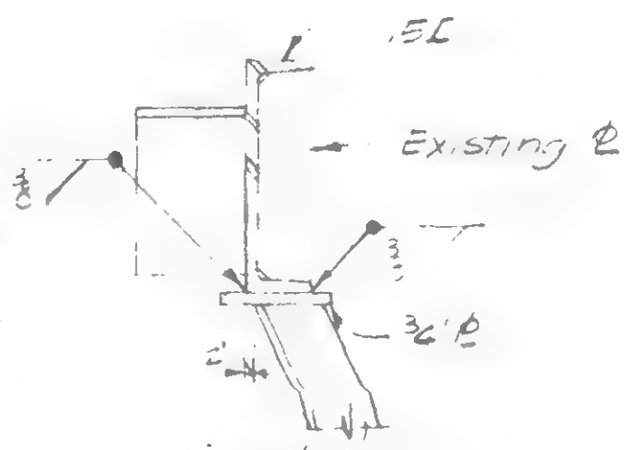


Section f-f

Notes

1. All additional detail material to be $F_y$=50 ksi.
2. All welding electrodes to be E70xx

= Reinf. not required col. 701

DETAIL 987E Col. 701 & 708 New

DETAIL 987F Col. 80. & 807 New

19-A-987.5

DRAWN

REVIEWED

SKILLING HELLE CHRISTIANSEN ROBERTSON — Structural & Civil Engineers

WTC 44400

PROJECT: THE WORLD TRADE CENTER

TITLE: FL. 106 CONNECTION DETAILS

DATE: 5/19/79

VISIONS

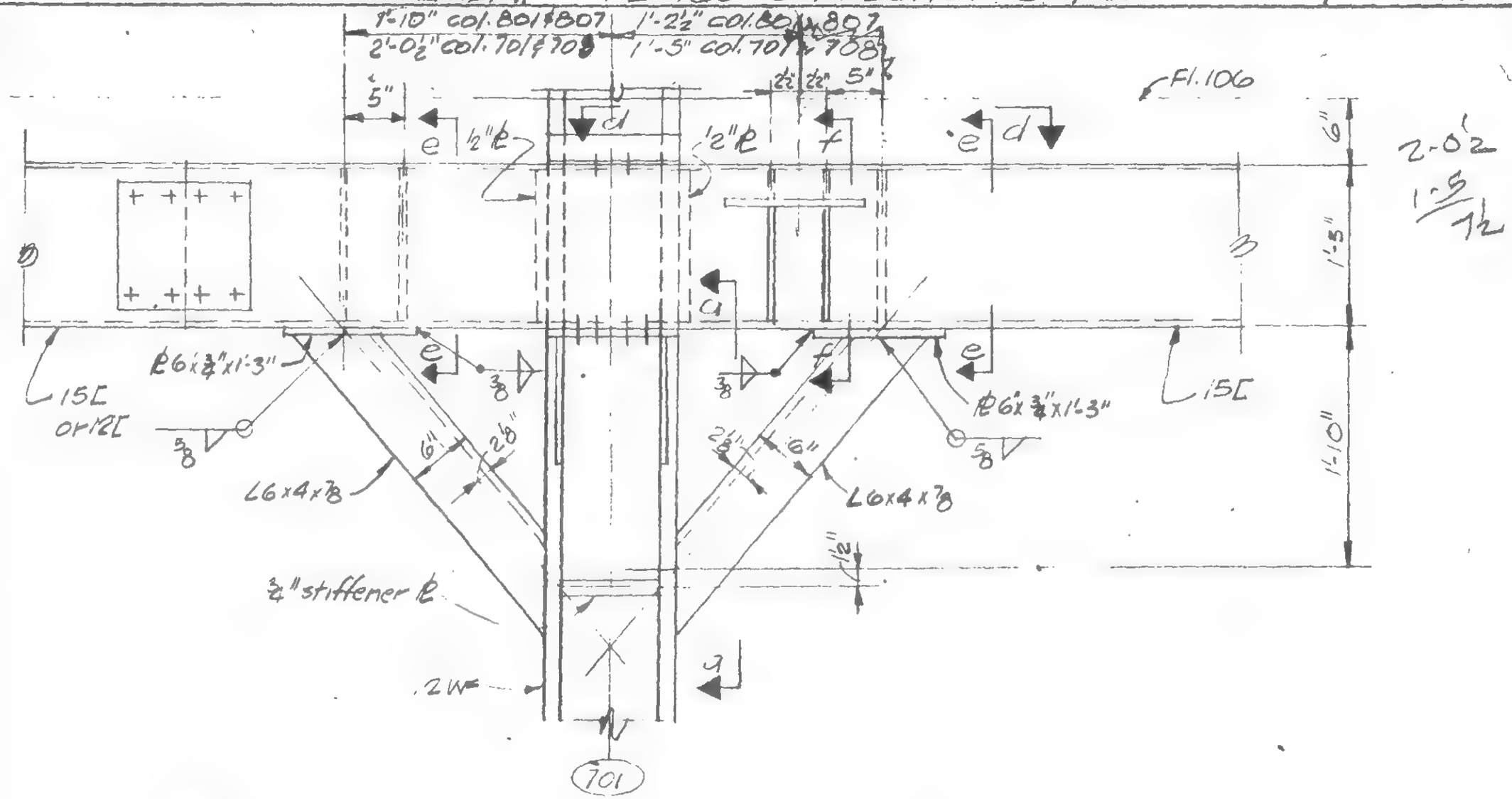


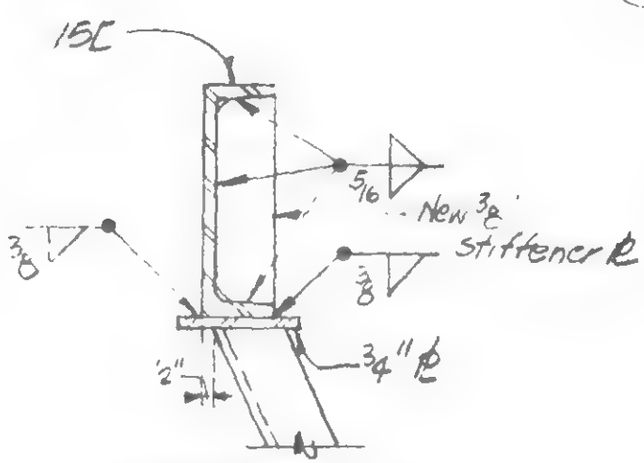


Section e-e

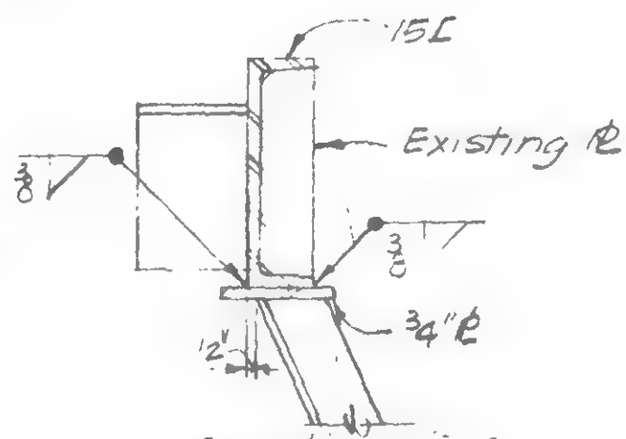


Section f-f

Notes:
1. All additional detail material to be $F_y$=50 ksi.
2. All welding electrodes to be E70xx

Reinf. not required col. 701

DETAIL 987E Col. 701 & 708 New

DETAIL 987F Col. 801 & 807 New

19-A-987.5

LICENSED PROFESSIONAL ENGINEER — DAVID L. ROBERTSON — NO. 34360 — STATE OF NEW YORK

DESIGNED

DRAWN

REVIEWED

WAB

SKILLING, HELLE, CHRISTIANSEN, ROBERTSON — Structural & Civil Engineers

PROJECT: THE WORLD TRADE CENTER | TITLE: FL.106 CONNECTION DETAILS | DATE: 1-27-71

REVISIONS

Printed 7/30/71

10/6/71

5/9/79 R

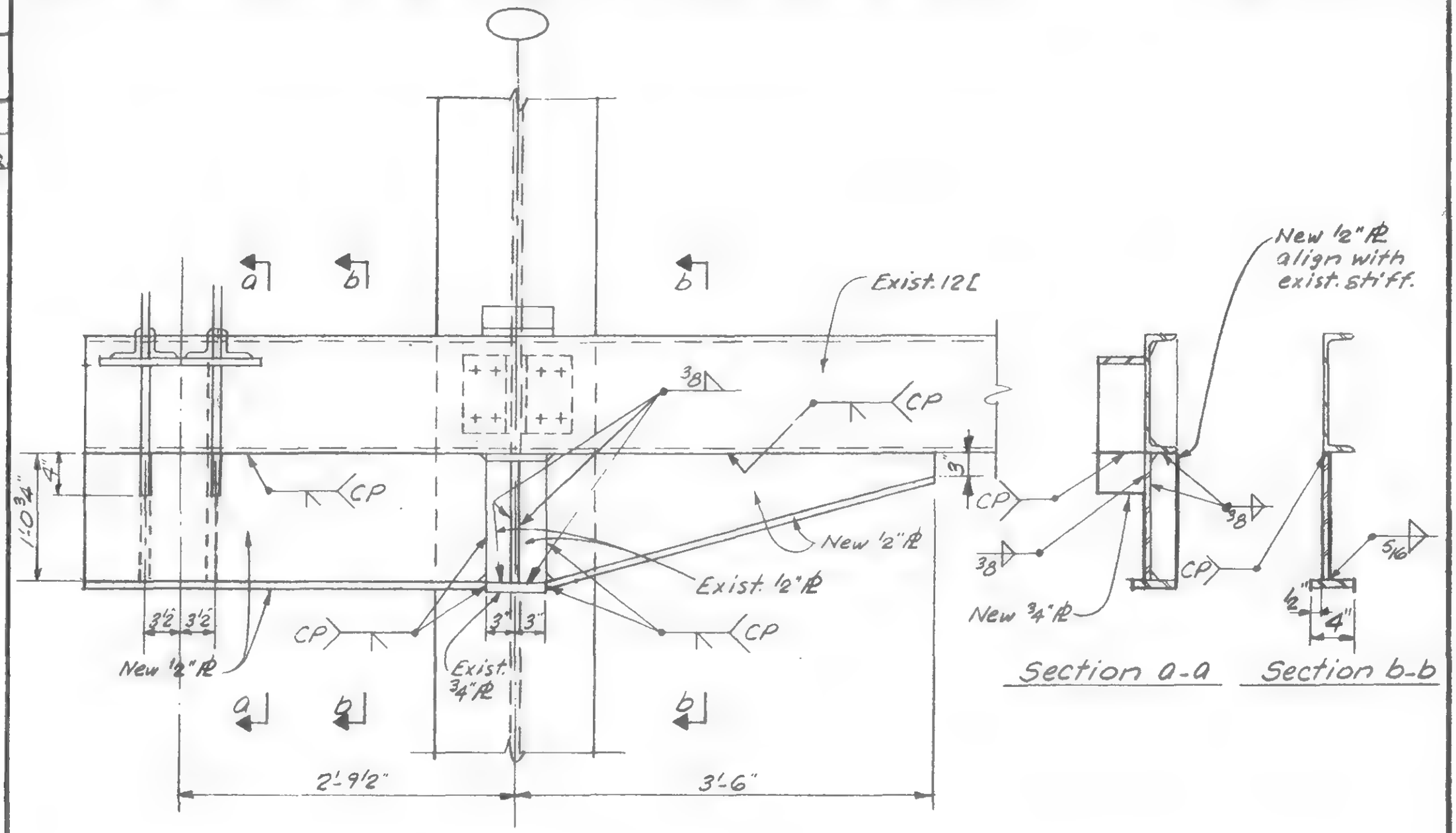


## Detail 987G

| | | |
|---|---|---|
| Column | 1008 as shown | existing |
| Column | 1001 opp. hand | existing |
| Column | 501 as shown | Reinf. not required. |
| Column | 508 as shown | New |

LICENSED PROFESSIONAL ENGINEER — LESLIE E. ROBERTSON — No 34380 — UNIVERSITY OF THE STATE OF NEW YORK

DESIGNED: W. BREWER

DRAWN: A. FRANSUI

REVIEWED: [illegible]

19-A-987G

SKILLING, HELLE, CHRISTIANSEN, ROBERTSON — Structural & Civil Engineers

PROJECT: THE WORLD TRADE CENTER | TITLE: TRUSS DETAILS - FLOOR 106 | DATE: 1/27/71

REVISIONS

7/30/71

Printed 5/9/79

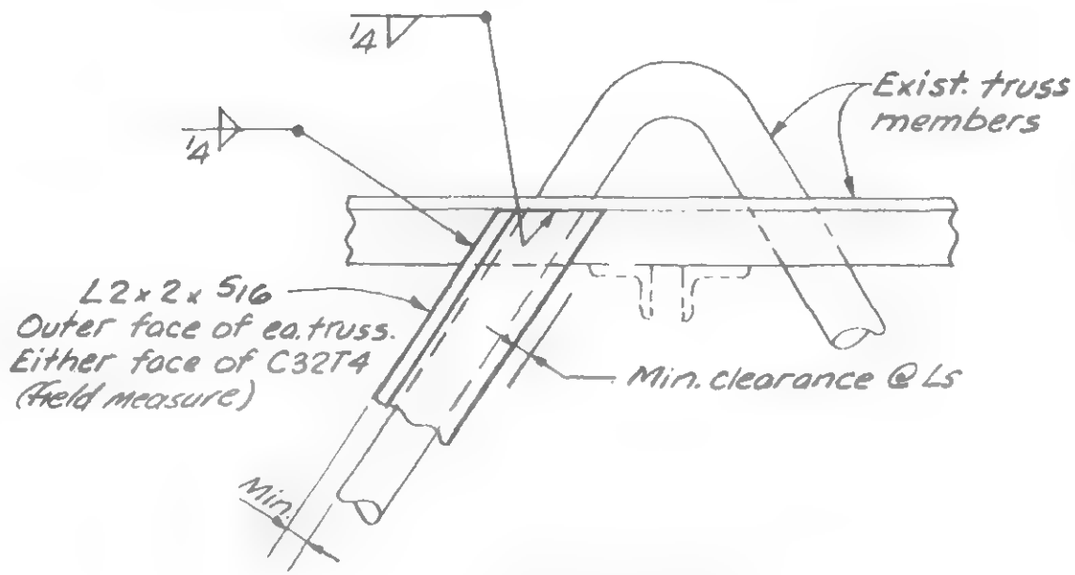


Detail 988A

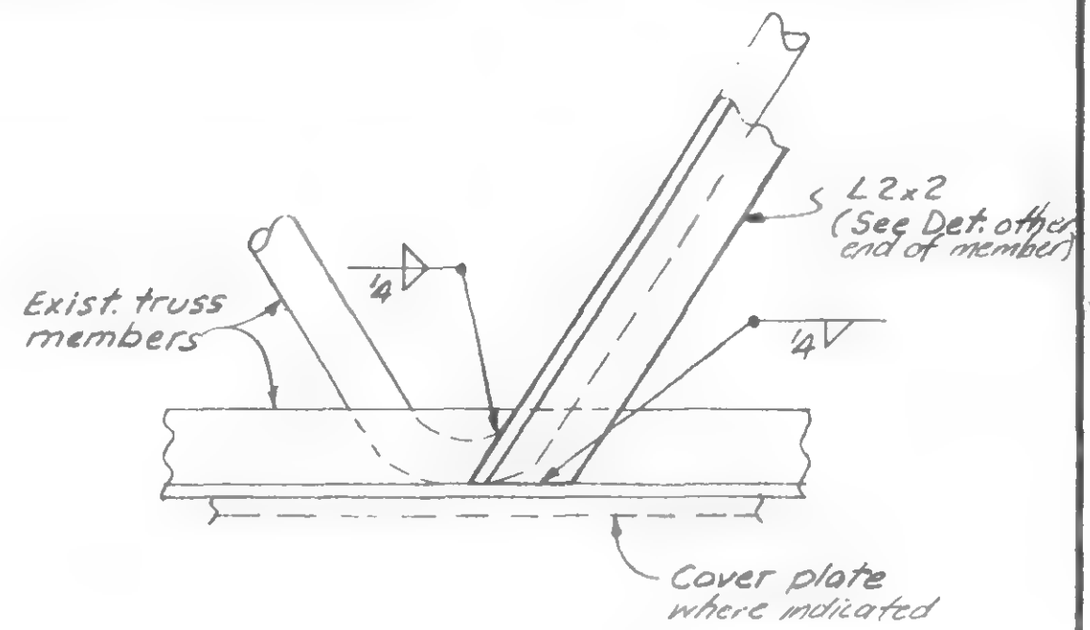


Detail 988B

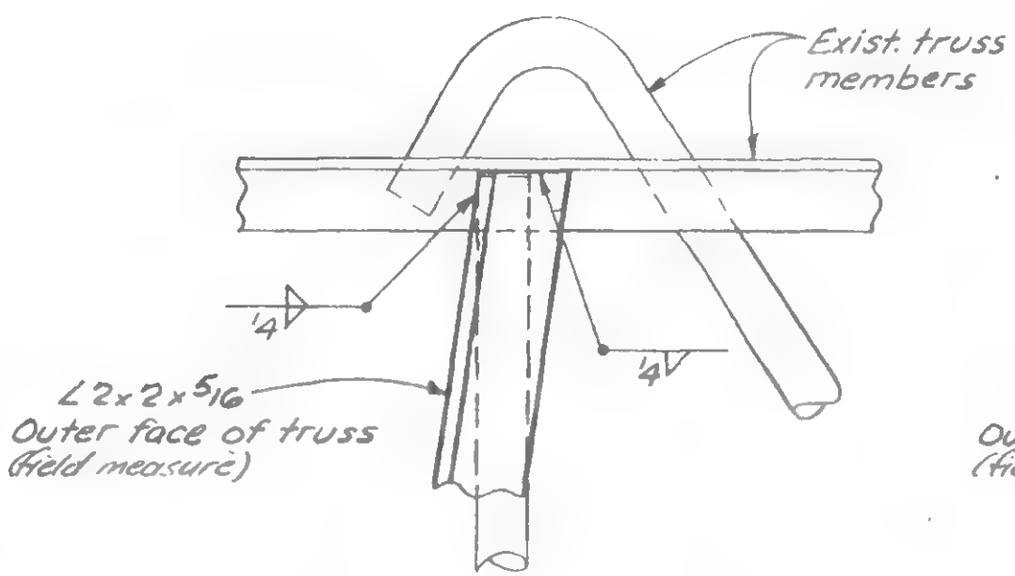


Detail 988C

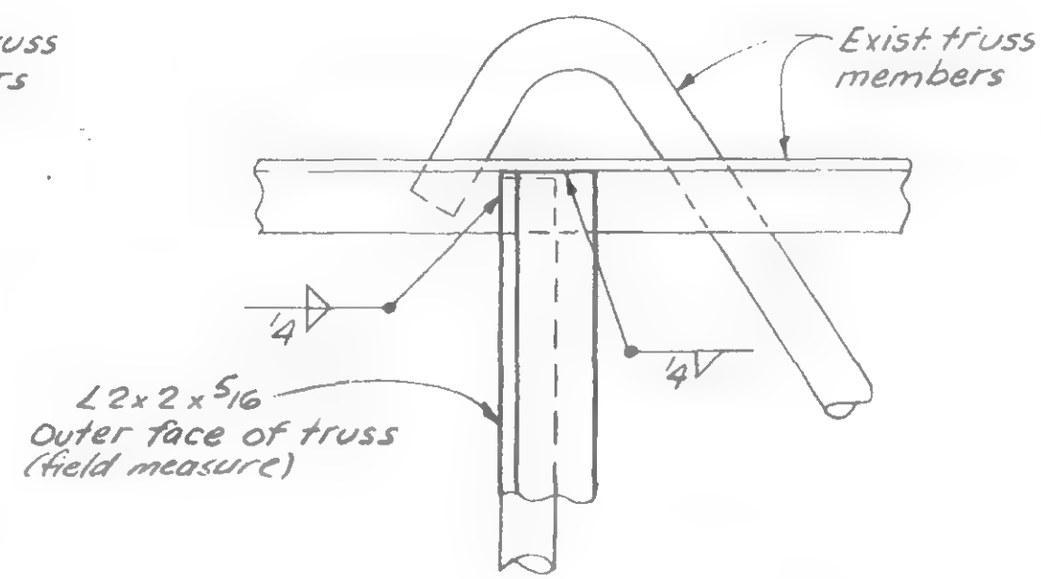


Detail 988D

For Notes see 19-A-985.1

LICENSED PROFESSIONAL ENGINEER — LESLIE E. ROBERTSON — No 34360 — UNIVERSITY OF THE STATE OF NEW YORK

DESIGNED: H. ROET

DRAWN: A. FRANQUI

REVIEWED: WOB

19-A-988.1

SKILLING HELLE CHRISTIANSEN ROBERTSON Structural & Civil Engineers

PROJECT THE WORLD TRADE CENTER | TITLE TRUSS DETAILS - FLOOR 106 | DATE 5/9/79

REVISIONS

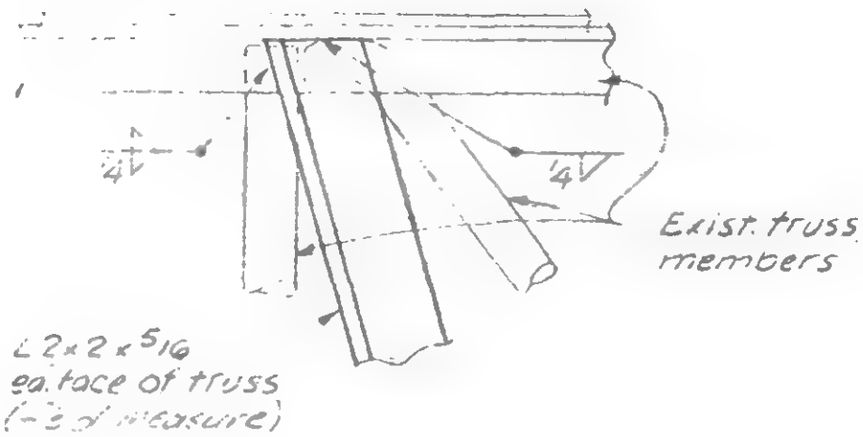


Detail 988E

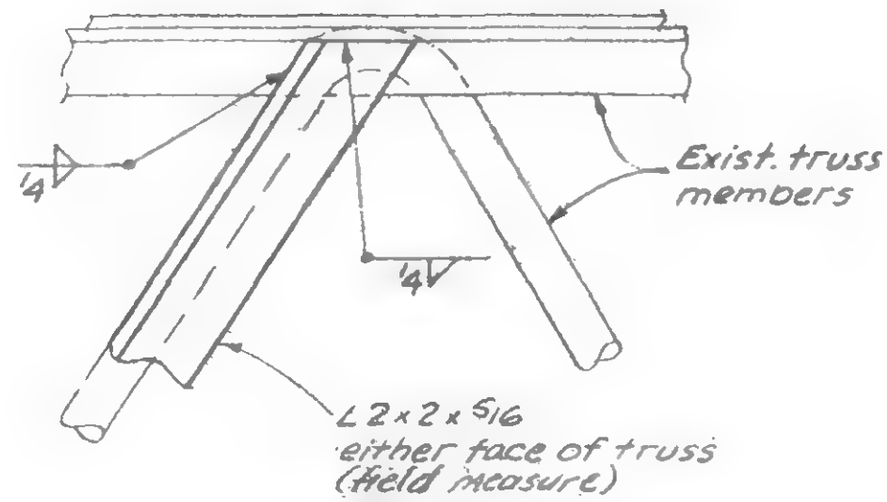


Detail 988G

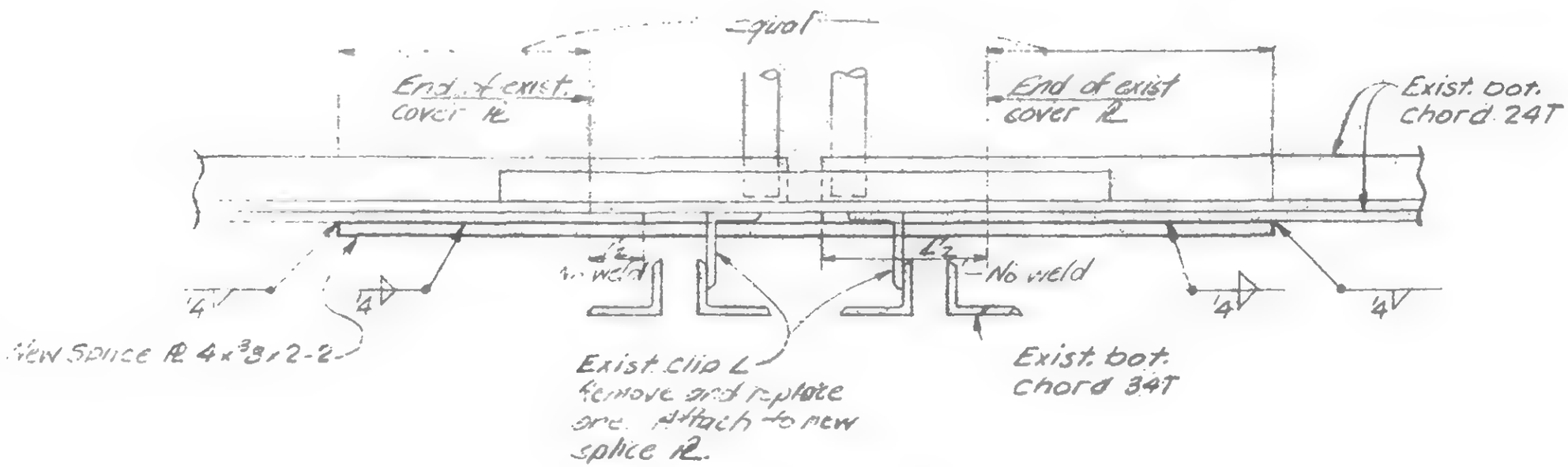


Detail 988F

DESIGNED F. FOET

DRAWN A. FRANGU

REVIEWED WAB

19-A-988.2

SKILLING HELLE CHRISTIANSEN ROBERTSON — Structural & Civil Engineers

PROJECT: THE WORLD TRADE CENTER

TRUSS DETAILS - FLOOR 106

DATE: 1/27/79

REVISIONS

7/30/71

5/9/79

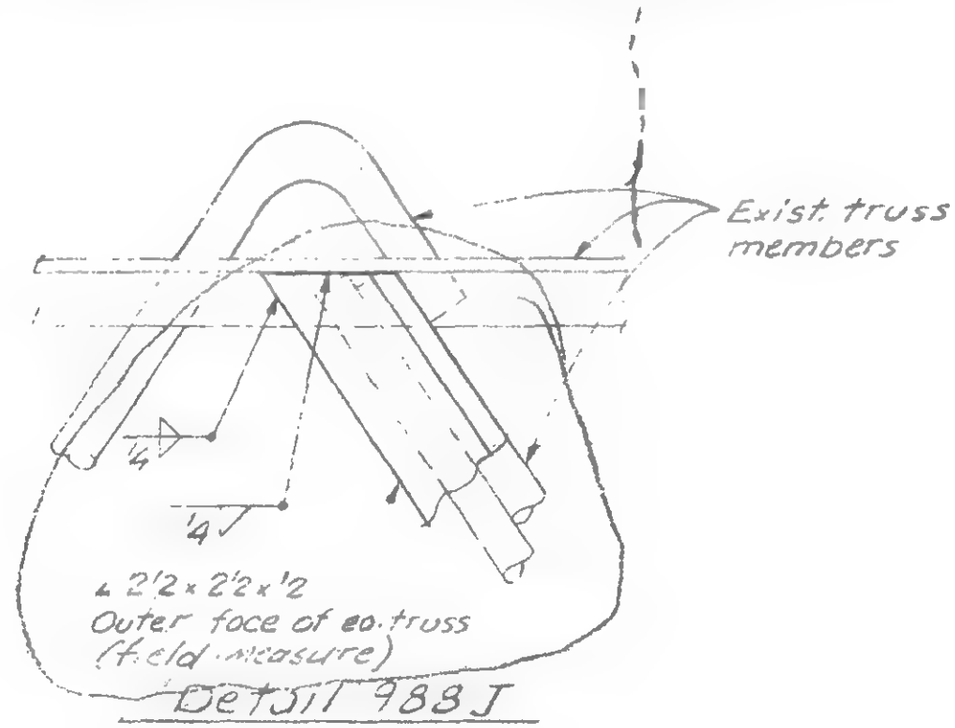


Detail 988 J

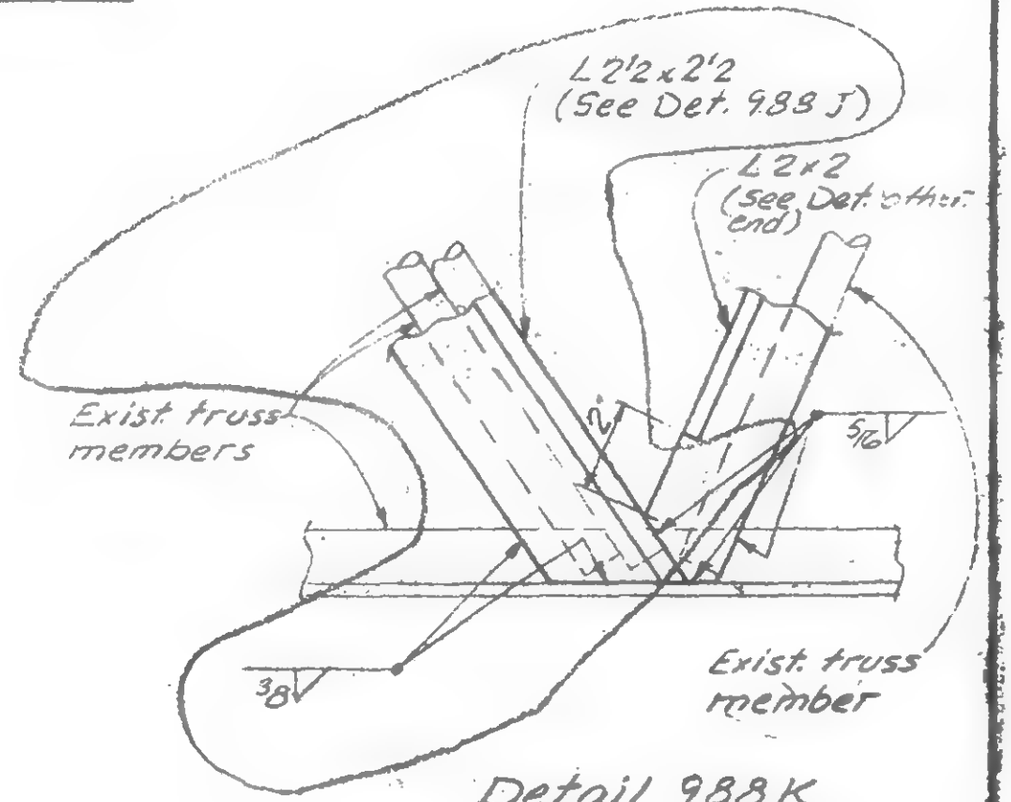


Detail 988 K

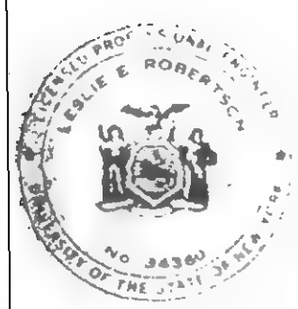


DESIGNED: H. ROET

DRAWN: A. FRANCUI

REVIEWED: W.C.H.

19-A-988.3

SKILLING, HELLE, CHRISTIANSEN, ROBERTSON — Structural & Civil Engineers

WTC 444.00

PROJECT: THE WORLD TRADE CENTER | TITLE: TRUSS DETAILS - FL 106 | DATE: 1/27/71

REVISIONS

7/30/71

Printed 5/9/79

11/30/79 4

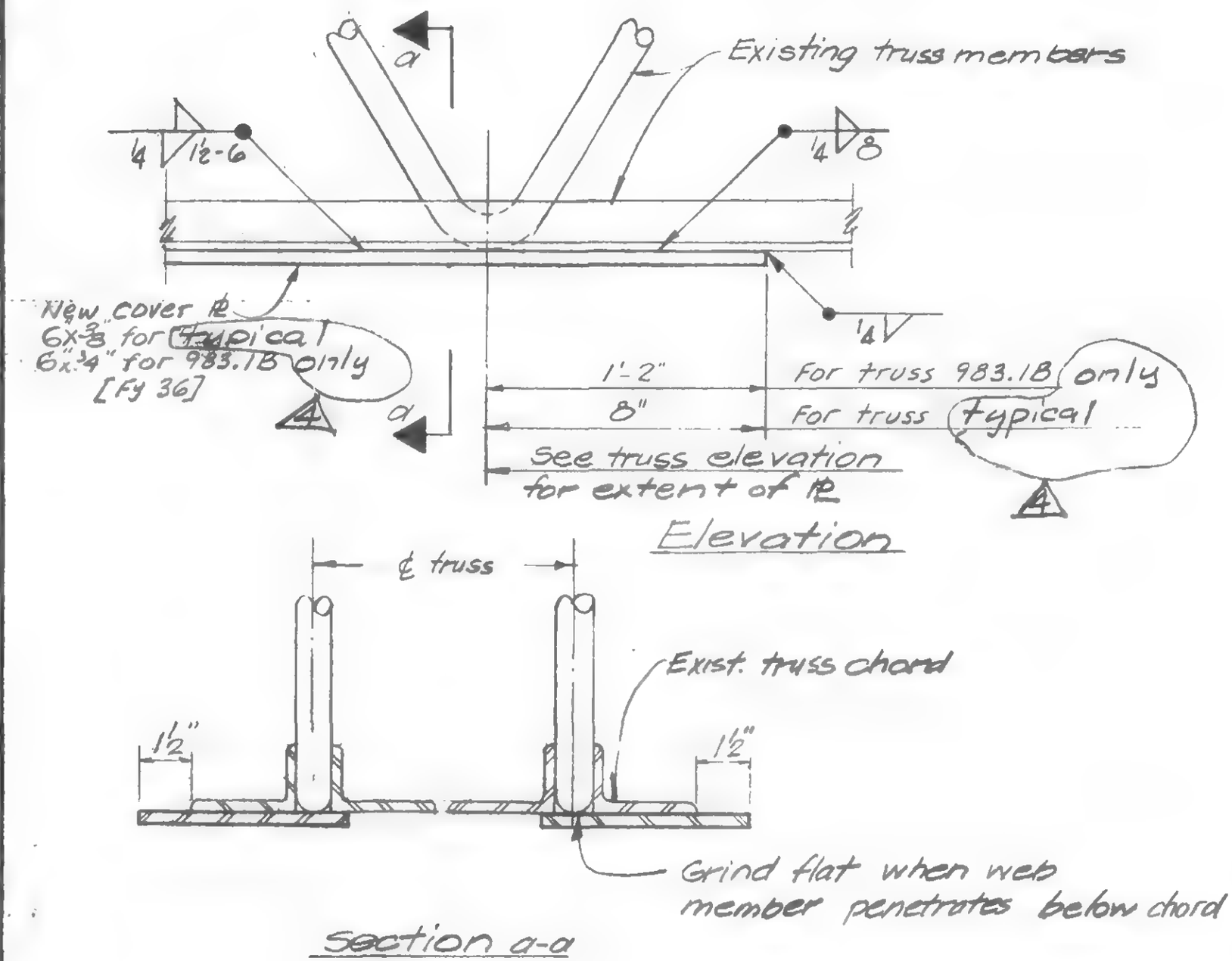


DETAIL 989A

LICENSED PROFESSIONAL ENGINEER LESLIE E. ROBERTSON NO 34360 UNIVERSITY OF THE STATE OF NEW YORK

DRAWN P. Orelli

REVIEWED WAB

19-A-989.1

SKILLING, HELLE, CHRISTIANSEN, ROBERTSON — Structural & Civil Engineers

PROJECT: THE WORLD TRADE CENTER | TITLE: TRUSS DETAILS - FL 106 | DATE: 1/27/71

REVISIONS:
7/30/71
Printed 5/9/79

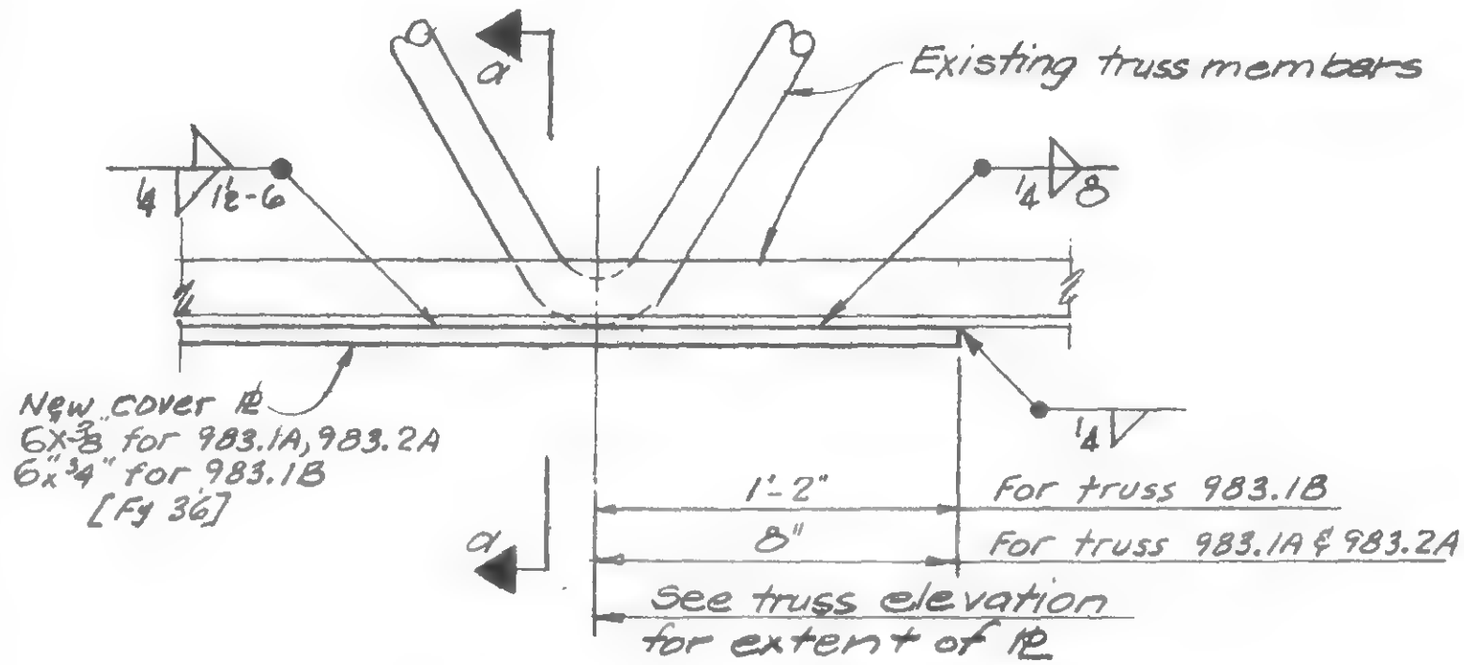


Elevation

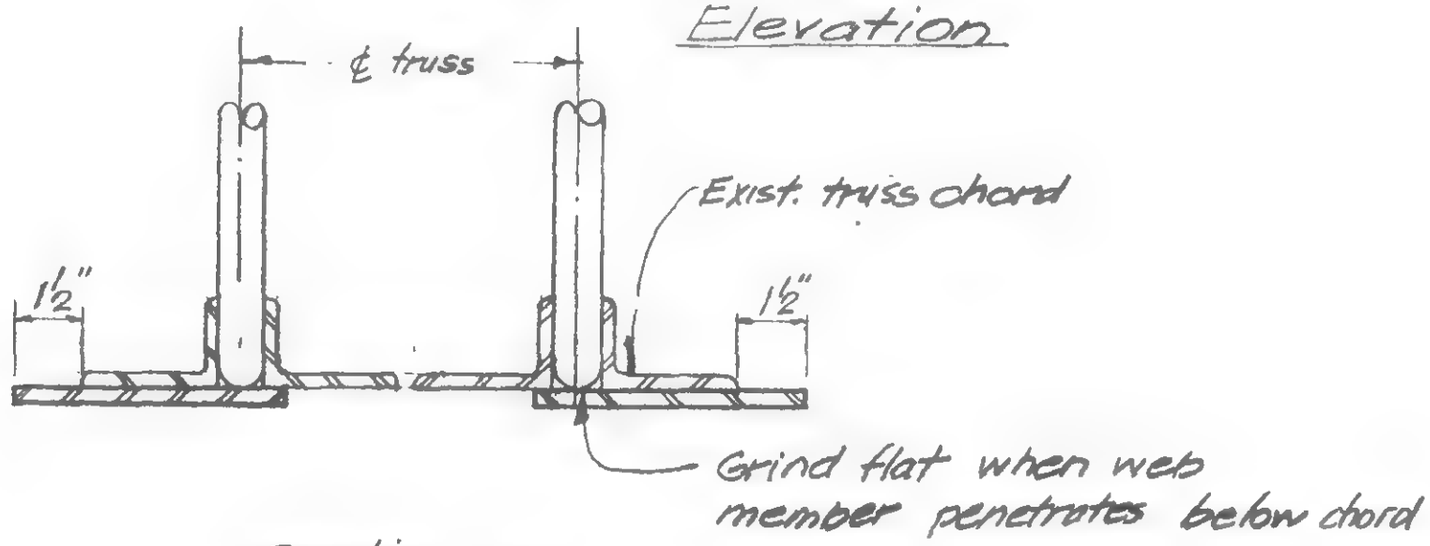


Section a-a

DETAIL 989A

DESIGNED

DRAWN: P. Orelli

REVIEWED

19-A-9891

SKILLING, HELLE, CHRISTIANSEN, ROBERTSON — Structural & Civil Engineers

PROJECT: THE WORLD TRADE CENTER | TITLE: TRUSS DETAIL - FL. 106 | DATE: 5/9/79

REVISIONS

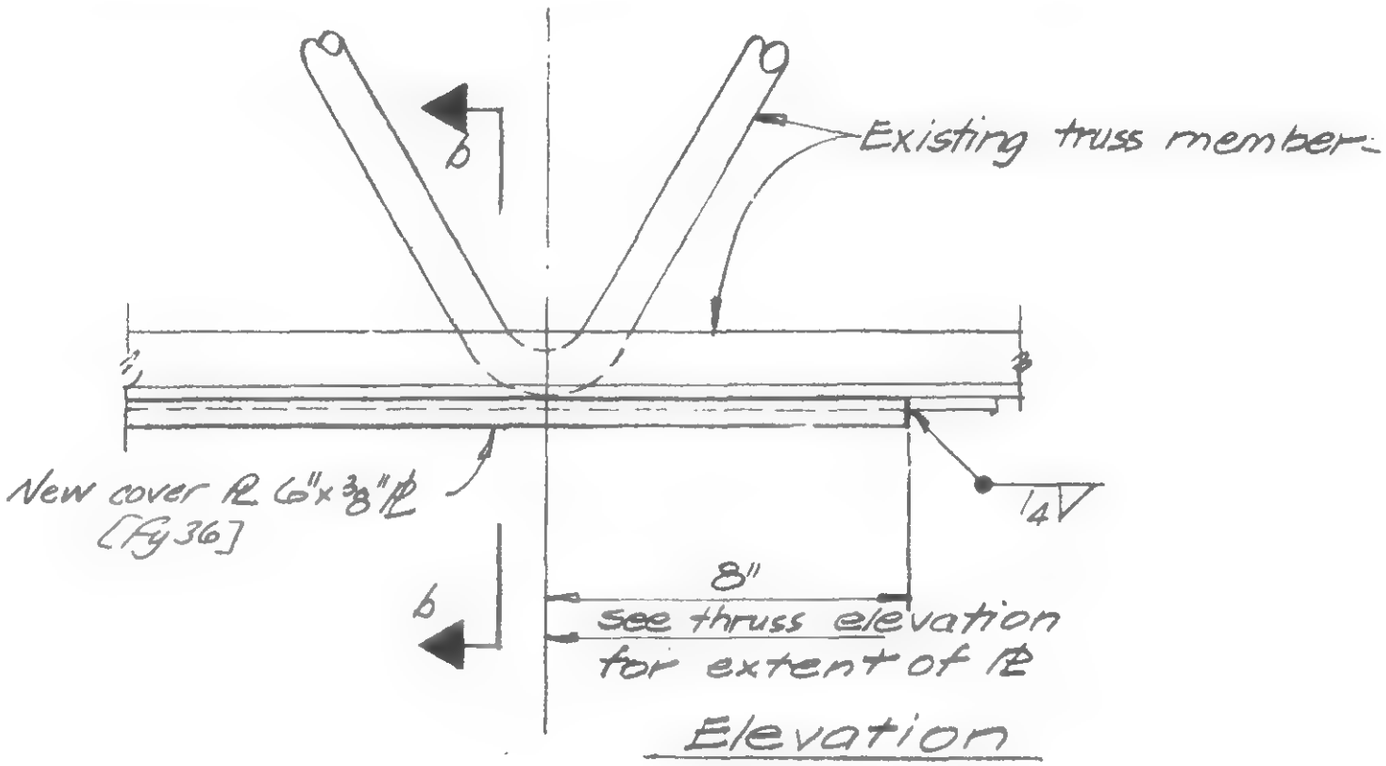


Elevation

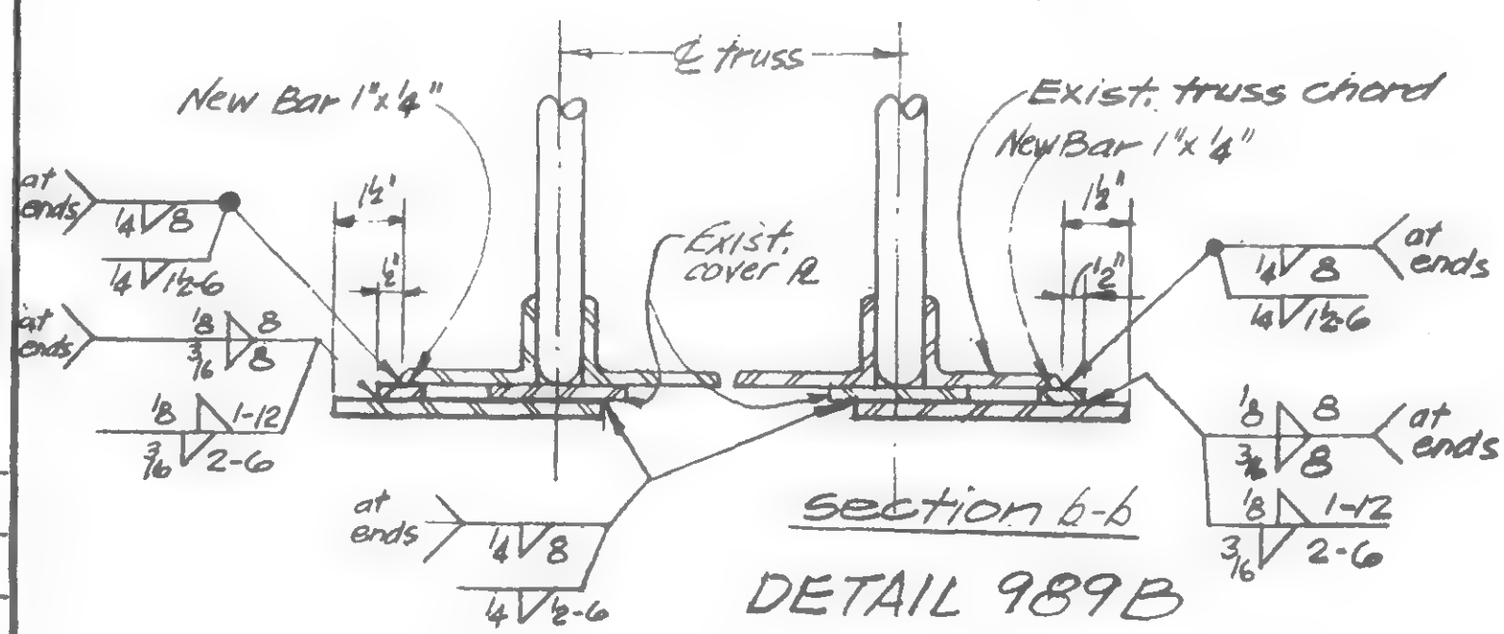


section b-b

DETAIL 989B

LICENSED PROFESSIONAL ENGINEER — LESLIE E. ROBERTSON — No. 34380 — UNIVERSITY OF THE STATE OF NEW YORK

DESIGNED

DRAWN P. Dodei

REVIEWED WAB

19-A-989.2

SKILLING, HELLE, CHRISTIANSEN, ROBERTSON — Structural & Civil Engineers

WTC 449.00

PROJECT: THE WORLD TRADE CENTER | TITLE: TRUSS DETAILS - FL. 106 | DATE: 5/19/79

REVISIONS

11-30-79 4

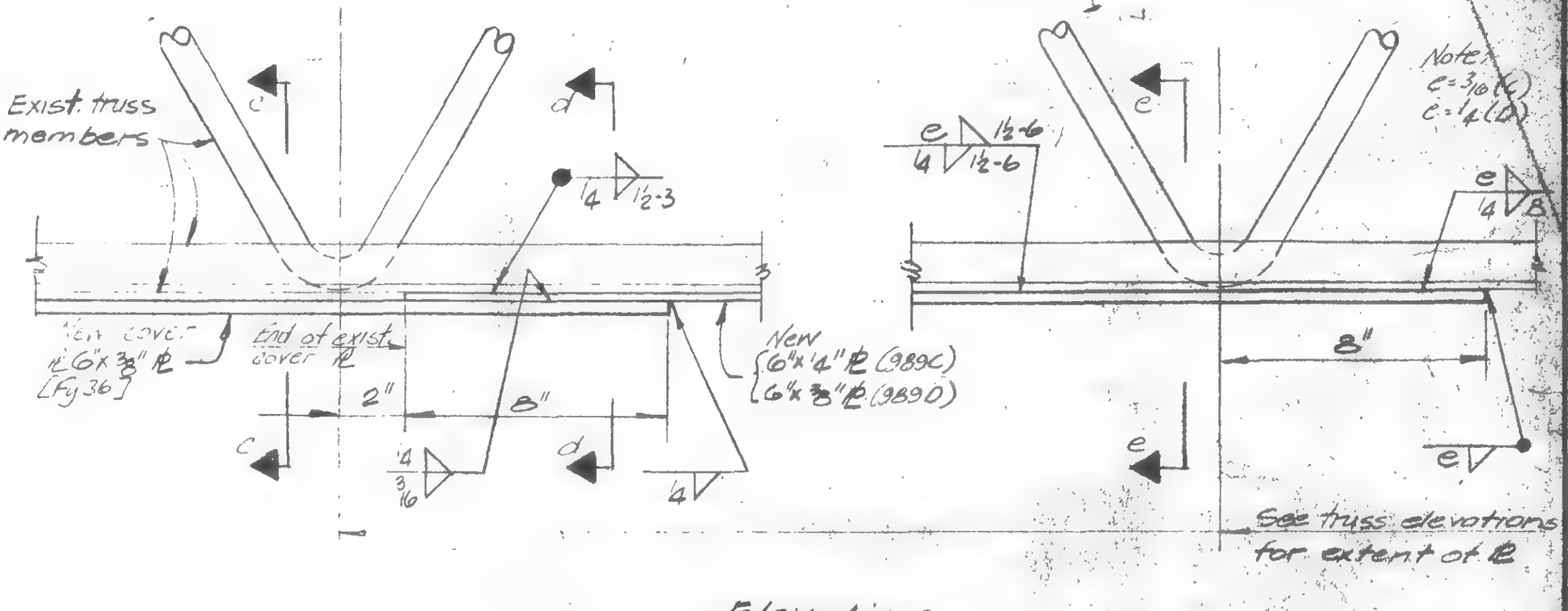


Elevation

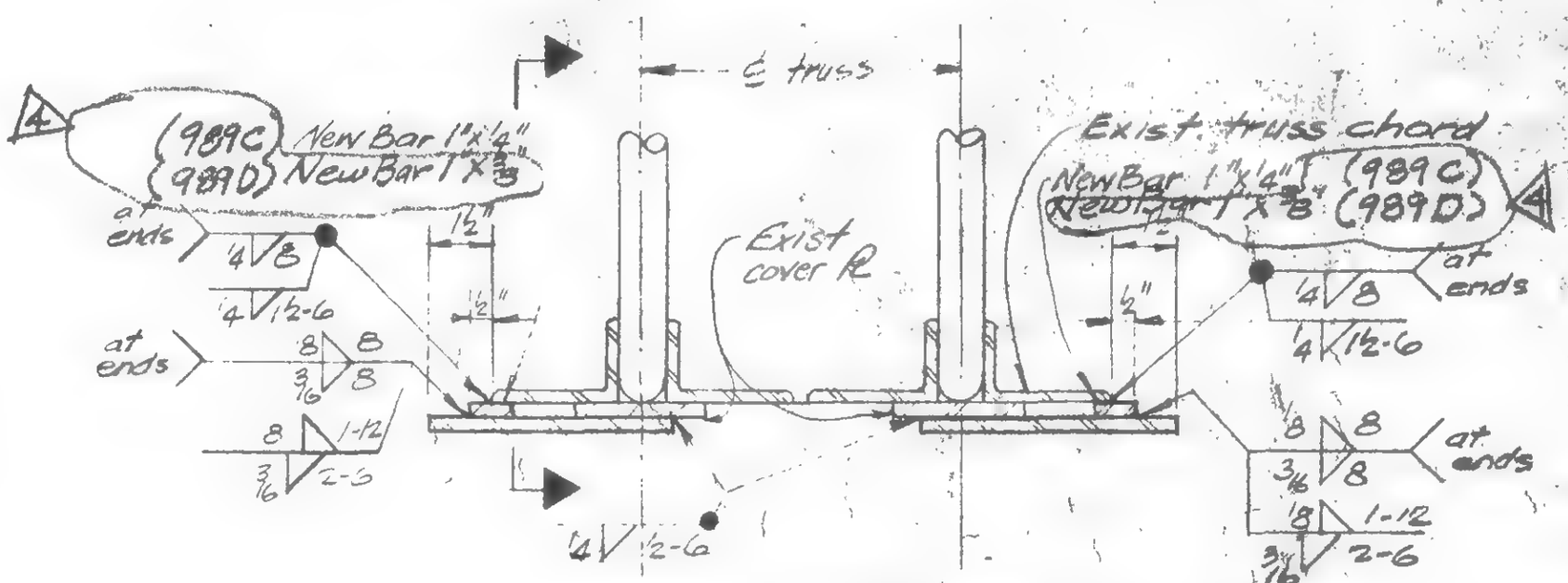


Section c-c

DETAIL 989 C AND D

19-A-989.3

DRAWN: P. Ovis

REVIEWED: WAR

SKILLING HELLE CHRISTIANSEN ROBERTSON — Structural & Civil Engineers

PROJECT: THE WORLD TRADE CENTER | TITLE: TRUSS DETAILS: EL. 106 | DATE: 5/9/79

REVISIONS

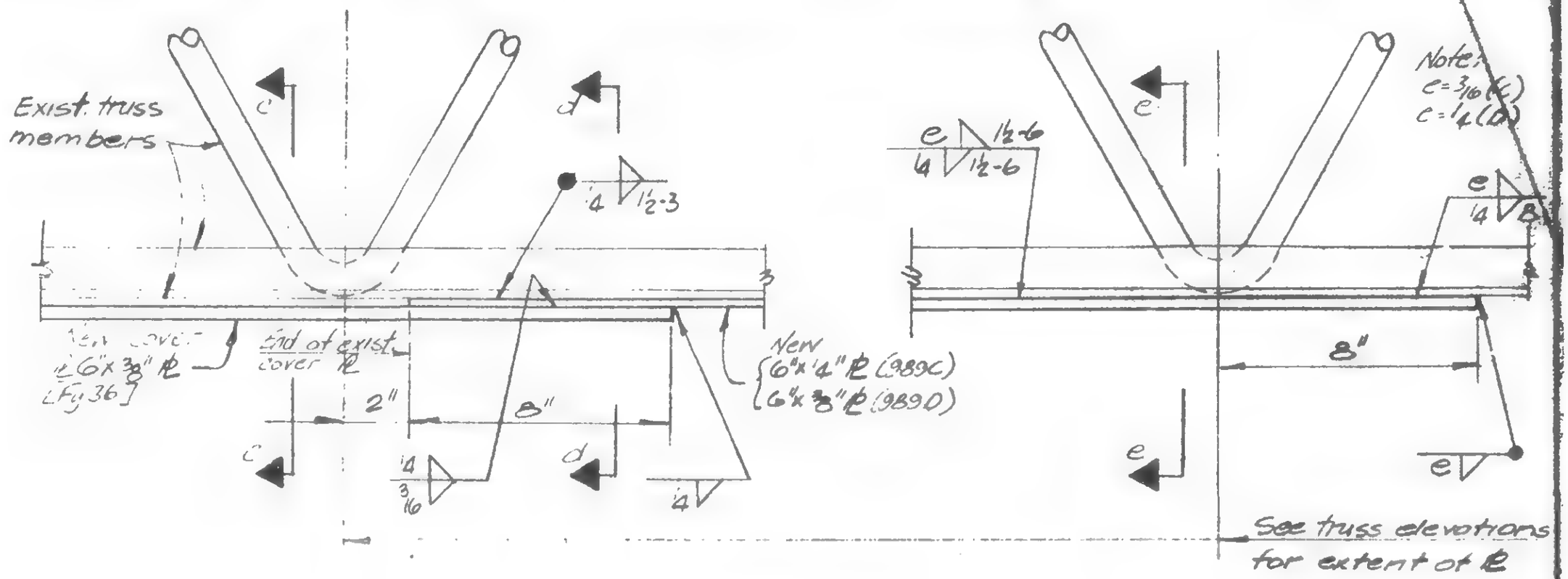


Elevation

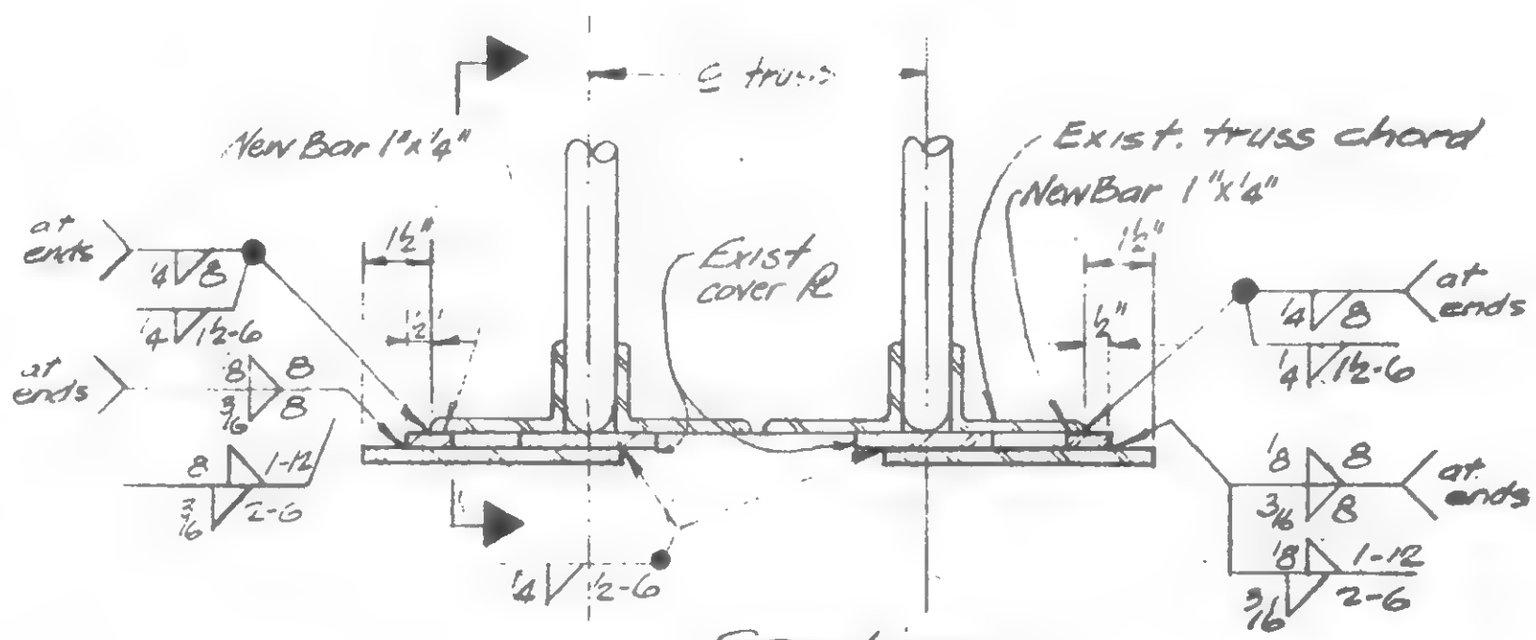


Section c-c

DETAIL 989 C AND D

19-A-989.3

LICENSED PROFESSIONAL ENGINEER LESLIE E. ROBERTSON NO 34360 THE UNIVERSITY OF THE STATE OF NEW YORK

SIGNED

DRAWN F. Ortiz

REVIEWED WAB

SKILLING HELLE CHRISTIANSEN ROBERTSON — Structural & Civil Engineers

PROJECT: THE WORLD TRADE CENTER | TITLE: TRUSS DETAILS - FL. 106 | DATE: 5/9/79

REVISIONS

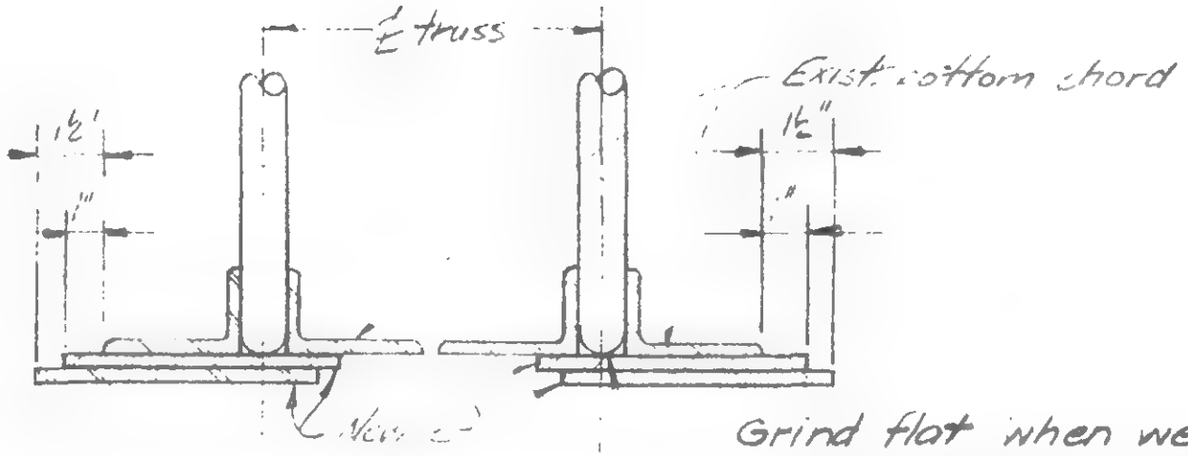


Grind flat when web member penetrates below chord

Section d-d

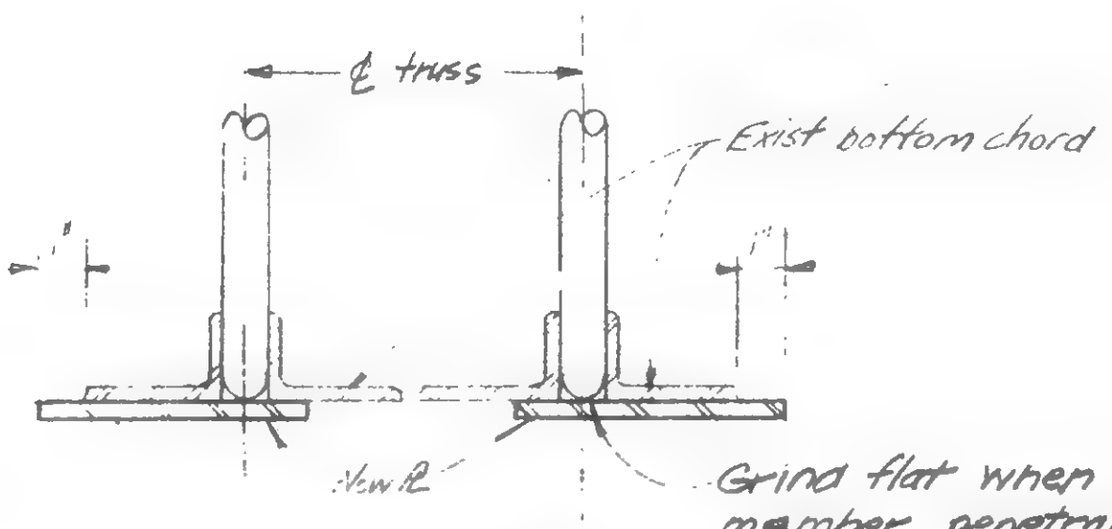


Grind flat when web member penetrates below chord

Section e-e

LICENSED PROFESSIONAL ENGINEER — LESLIE E. ROBERTSON — No 34360 — UNIVERSITY OF THE STATE OF NEW YORK

DESIGNED

DRAWN R. Orsie

REVIEWED

19-A-989.4

SKILLING HELLE CHRISTIANSEN ROBERTSON — Structural & Civil Engineers

PROJECT: THE WORLD TRADE CENTER | TITLE: TRUSS DETAILS – FL. 106 | DATE: 5/9/79

REVISIONS

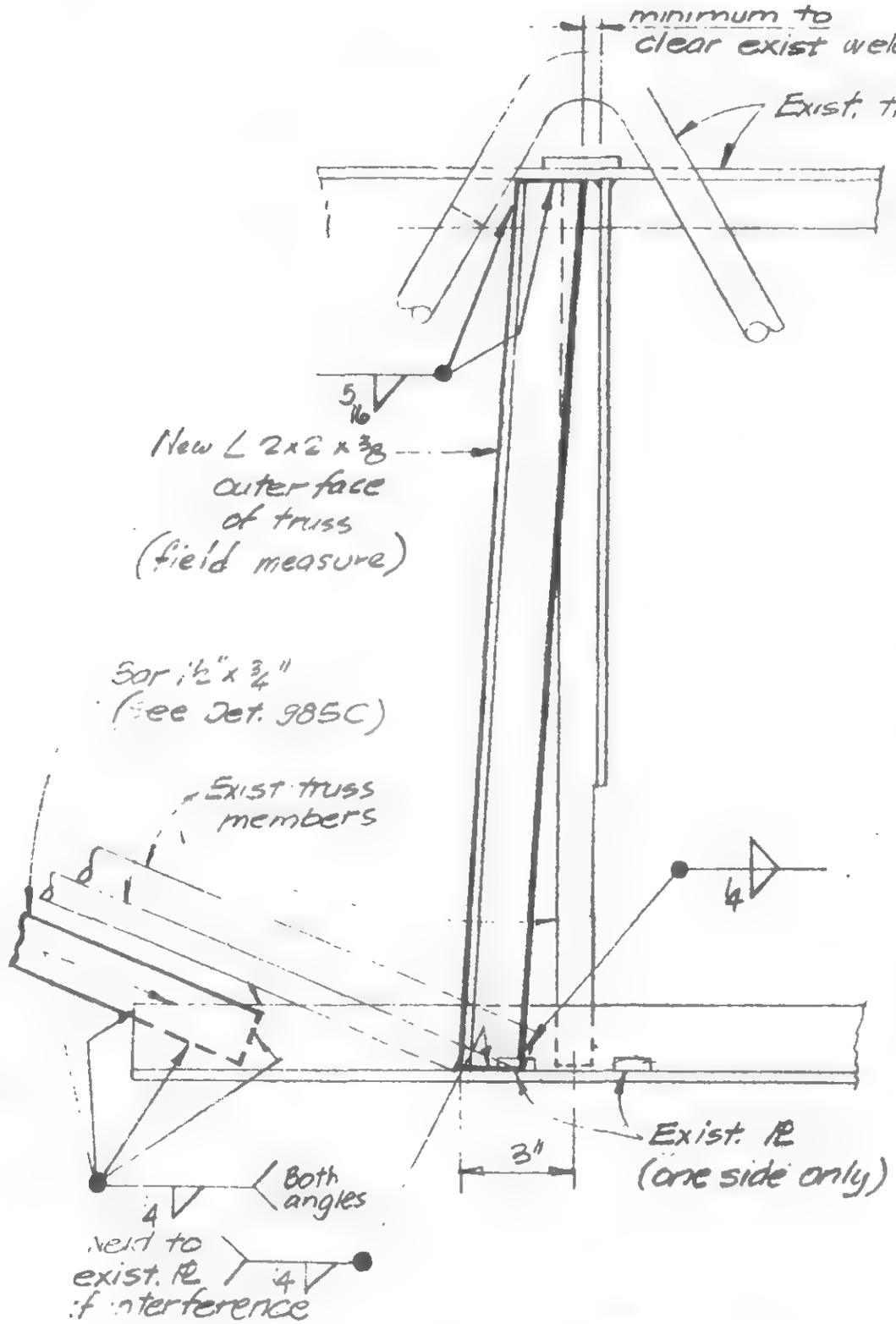


DETAIL 990A

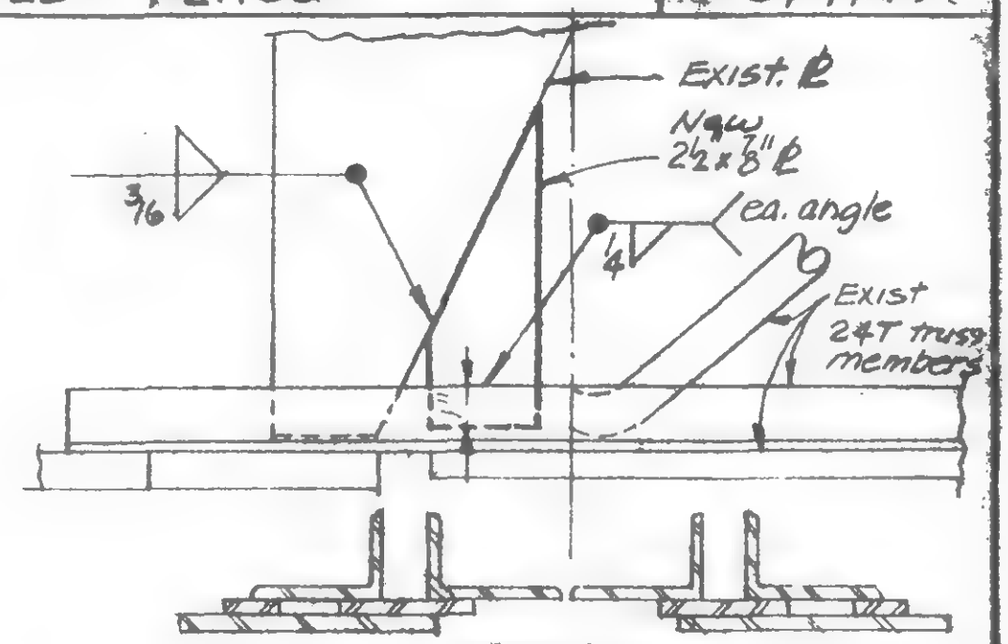


Section

DETAIL 990B

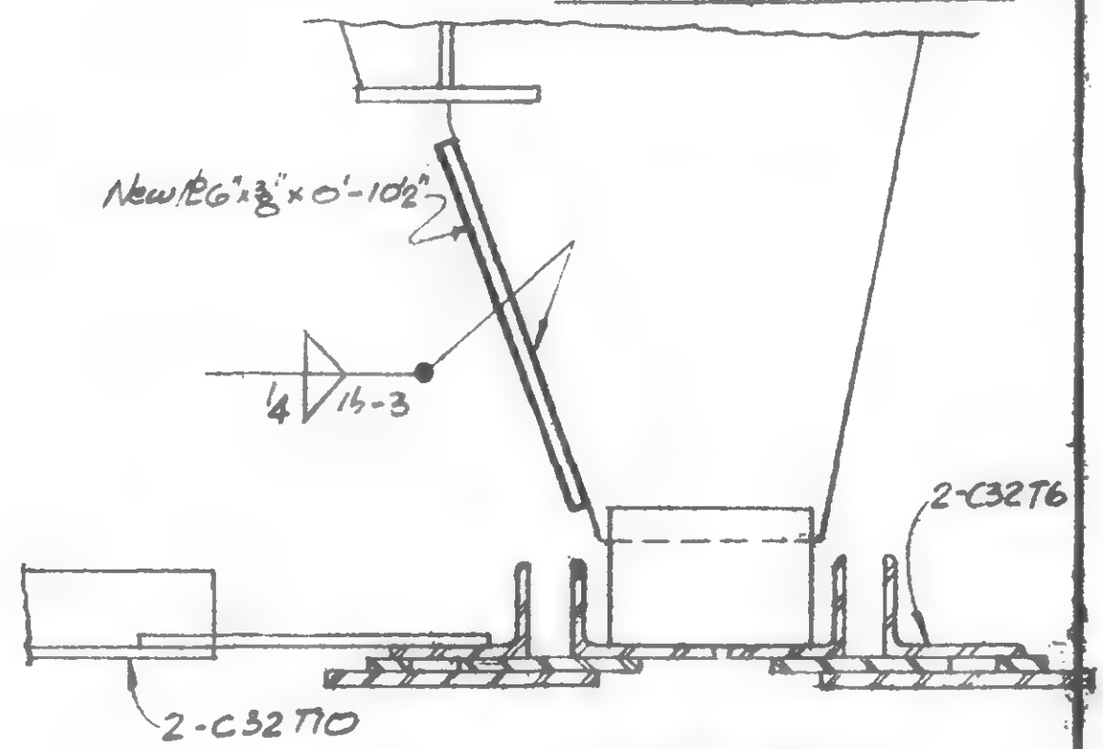


Section

DETAIL 990C

For Notes see 19-A-985.1

19-A-990.1

LICENSED PROFESSIONAL ENGINEER — LESLIE E. ROBERTSON — NO 34360 — UNIVERSITY OF THE STATE OF NEW YORK

SIGNED

DRAWN

REVIEWED

SKILLING, HELLE, CHRISTIANSEN, ROBERTSON — Structural & Civil Engineers

PROJECT: THE WORLD TRADE CENTER | TITLE: TRUSS DETAILS - FL. 106 | DATE: 5/9/79

REVISIONS

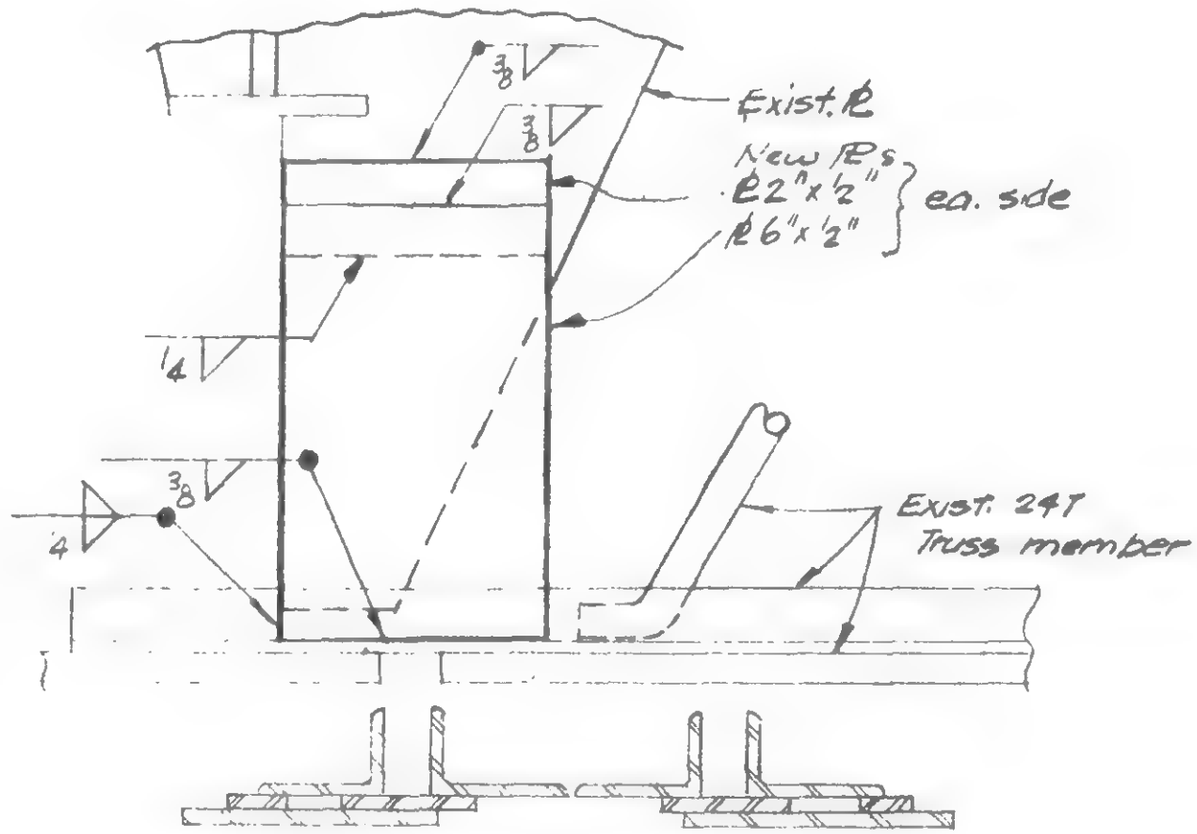


Section

DETAIL 990D

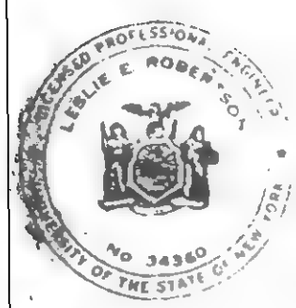


SIGNED

DRAWN

REVIEWED

19-A-990.2

SKILLING HELLE CHRISTIANSEN ROBERTSON — Structural & Civil Engineers

PROJECT: THE WORLD TRADE CENTER | TITLE: TRUSS DETAILS - FL. 106 | DATE: 5/9/79

REVISIONS

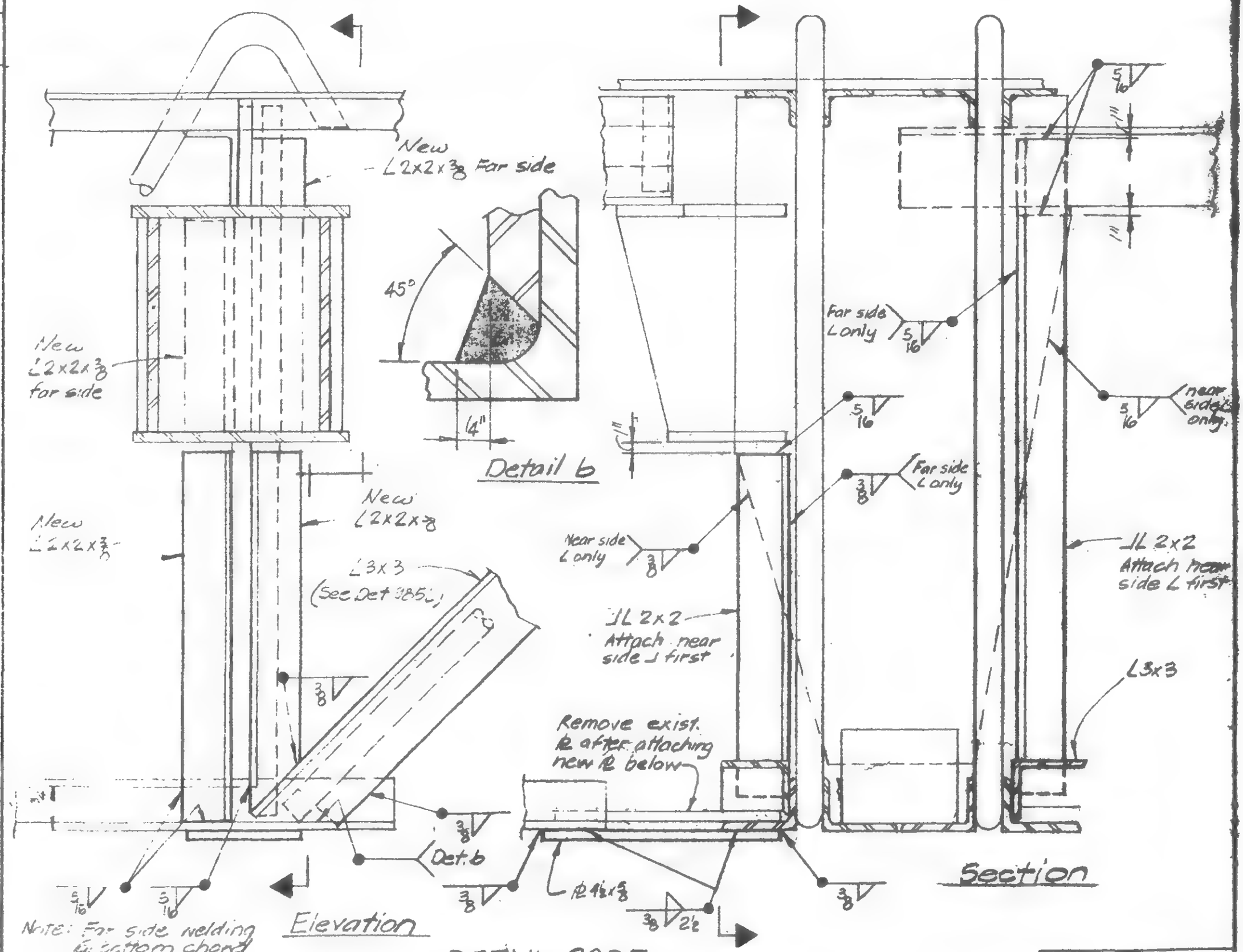


DETAIL 990E

19-A-990.3

LICENSED PROFESSIONAL ENGINEER LESLIE E. ROBERTSON NO. 34360 UNIVERSITY OF THE STATE OF NEW YORK

DESIGNED

DRAWN

REVIEWED WCB

SKILLING, HELLE, CHRISTIANSEN, ROBERTSON — Structural & Civil Engineers

PROJECT: THE WORLD TRADE CENTER | TITLE: LOUVER SUPPORT REPAIRS - FL. 108 | DATE: 2/5/71

REVISIONS

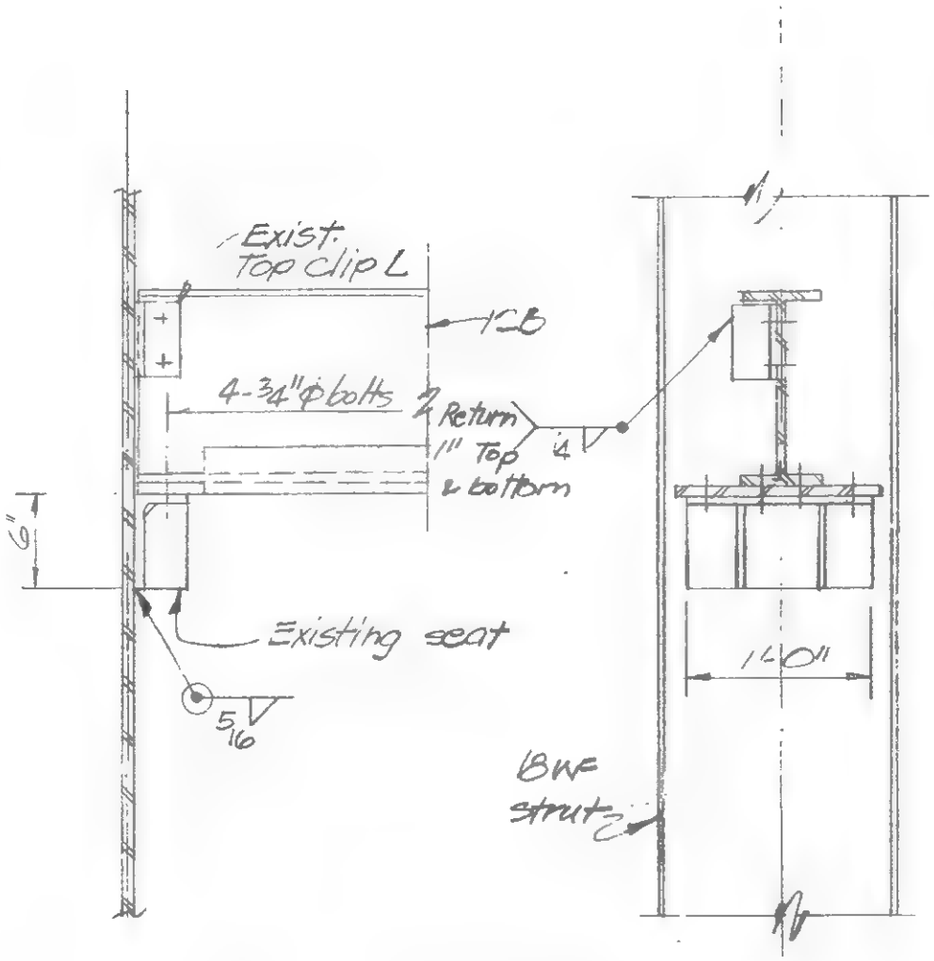


Remove existing connection material, relocate beam and reweld existing connection material to 18WF strut.

Detail 991A

See 9-AB9-1, 9-AB9-2.1, 9-AB9-3, 9-AB9-4.1 for location. Typical Detail 991A thru 991E

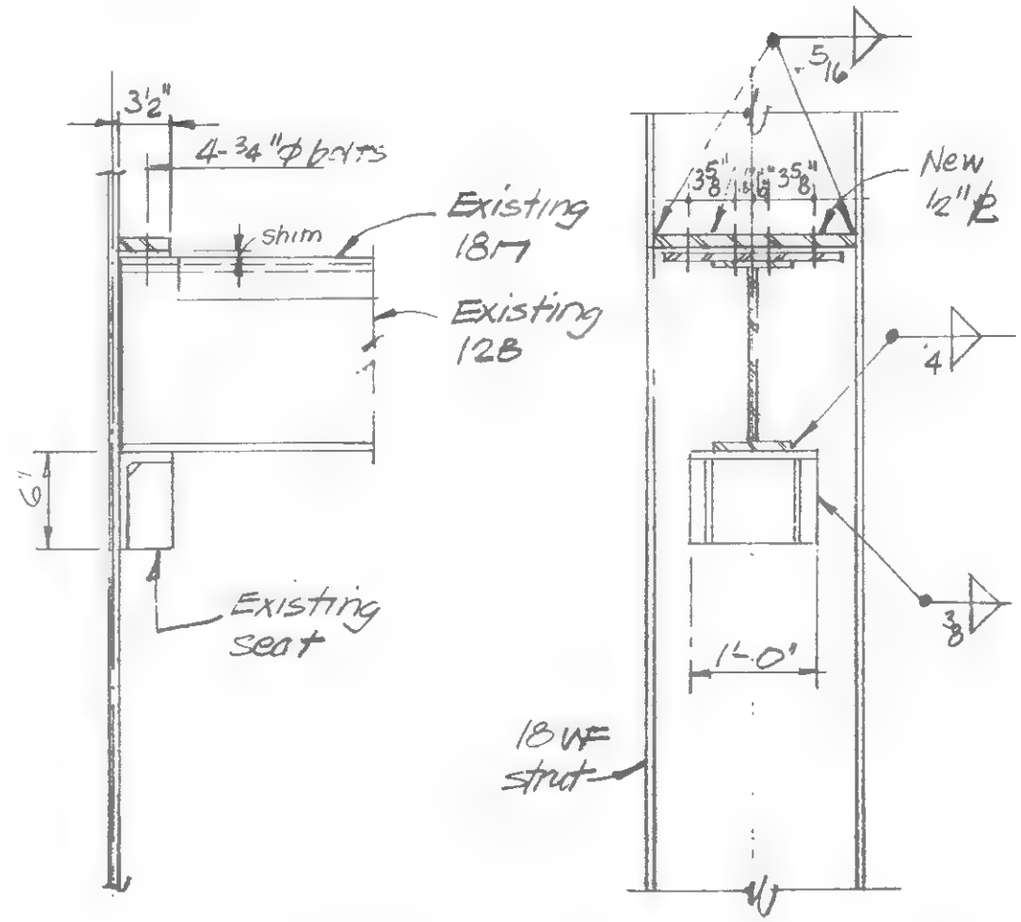


Remove existing connection material, rotate channel beam, assemble to position indicated in elevation, reweld existing connection material to 18WF strut and install new material as indicated.

Detail 991B

LICENSED PROFESSIONAL ENGINEER — LESLIE E. ROBERTSON — No. 34360 — UNIVERSITY OF THE STATE OF NEW YORK

DESIGNED: WAB

DRAWN: R. Orelli

REVIEWED

19-A-991.1

SKILLING, HELLE, CHRISTIANSEN, ROBERTSON — Structural & Civil Engineers

PROJECT: THE WORLD TRADE CENTER | TITLE: LOUVER SUPPORT REPAIRS - FL 108 | DATE: 2/5/71

REVISIONS

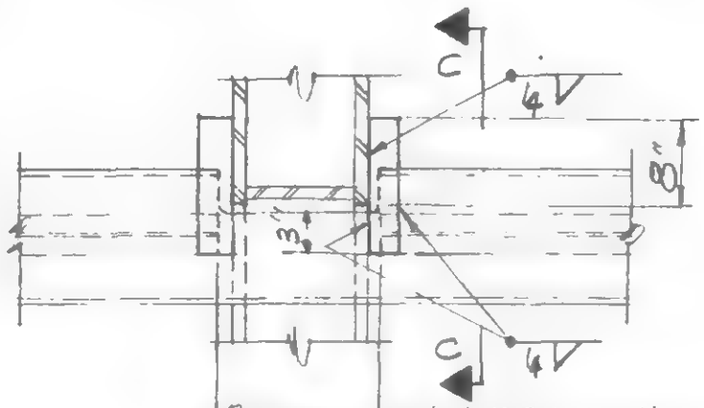


Remove exist. 12B w portion of 18C as req'd to clear strut

Plan Detail 991C

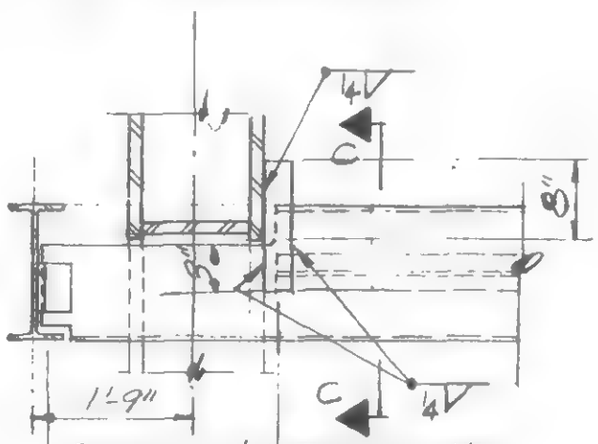


Remove exist. 12B w portion of 18C as req'd to clear strut

Plan Detail 991D

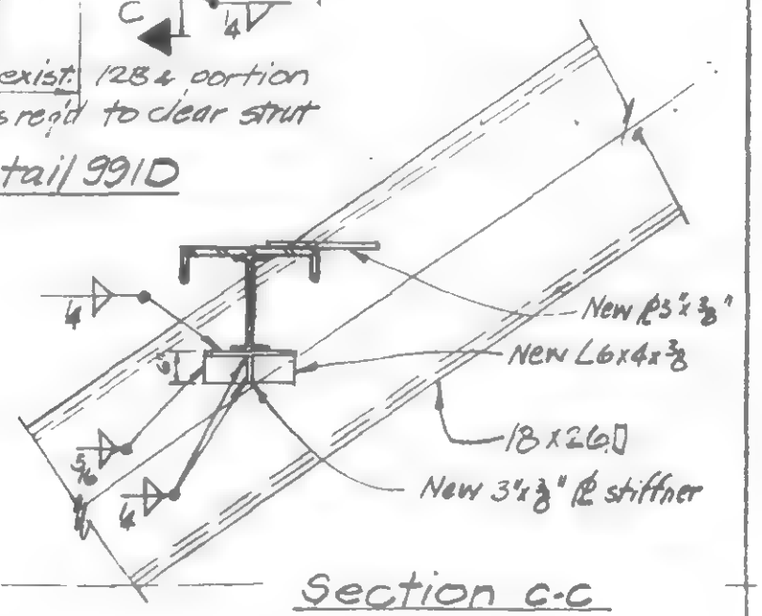


Section C-C

Detail 991C & D

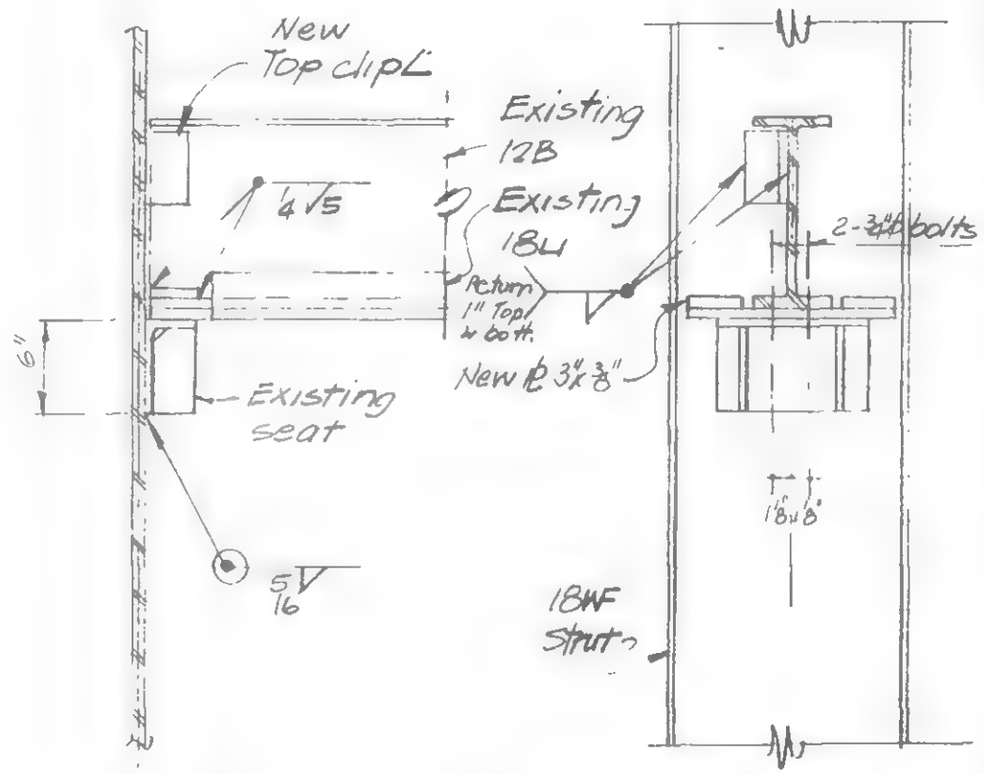


Remove existing connection material, relocate and reweld, rotate existing channel beam assembly and reinstall.

Detail 991E

LICENSED PROFESSIONAL ENGINEER — LESLIE E. ROBERTSON — No. 34360 — UNIVERSITY OF THE STATE OF NEW YORK

DESIGNED

DRAWN R. Orlali

REVIEWED

19-A-991.2

SKILLING, HELLE, CHRISTIANSEN, ROBERTSON — Structural & Civil Engineers

PROJECT: THE WORLD TRADE CENTER | TITLE: BEAM SEAT REPAIR TOWER B FLOOR 107 | DATE: 3-15-71

REVISIONS

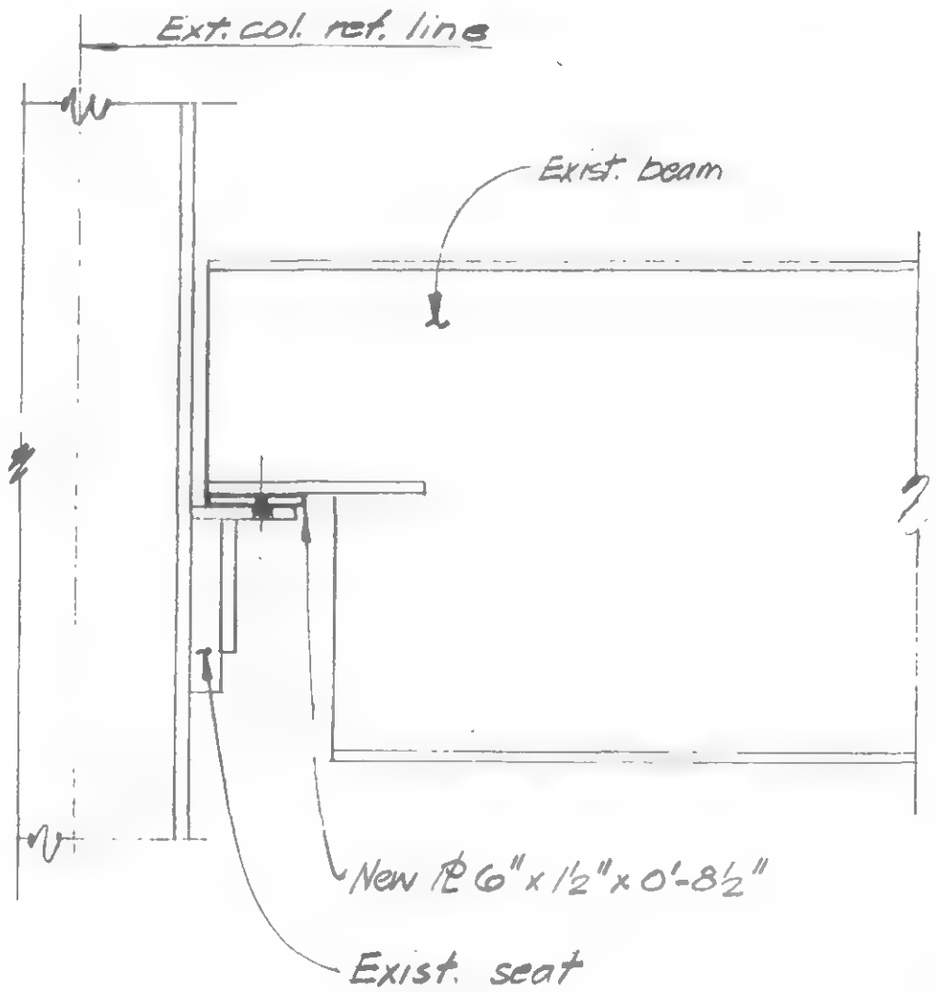


Detail 992A w 992B

See SB-115 for location.

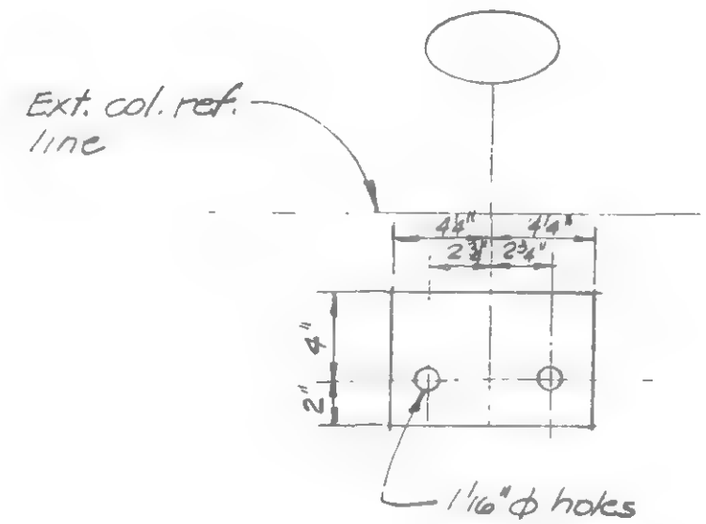


Plan of PL

LICENSED PROFESSIONAL ENGINEER — LESLIE E. ROBERTSON — No. 34360 — UNIVERSITY OF THE STATE OF NEW YORK

DESIGNED: WAB

DRAWN: P. Ozelu

REVIEWED:

19-B-992

SKILLING, HELLE, CHRISTIANSEN, ROBERTSON — Structural & Civil Engineers

PROJECT: THE WORLD TRADE CENTER | TITLE: BEAM SEAT REPAIR - TOWER B FLOOR 107 | DATE: 3-15-71

REVISIONS

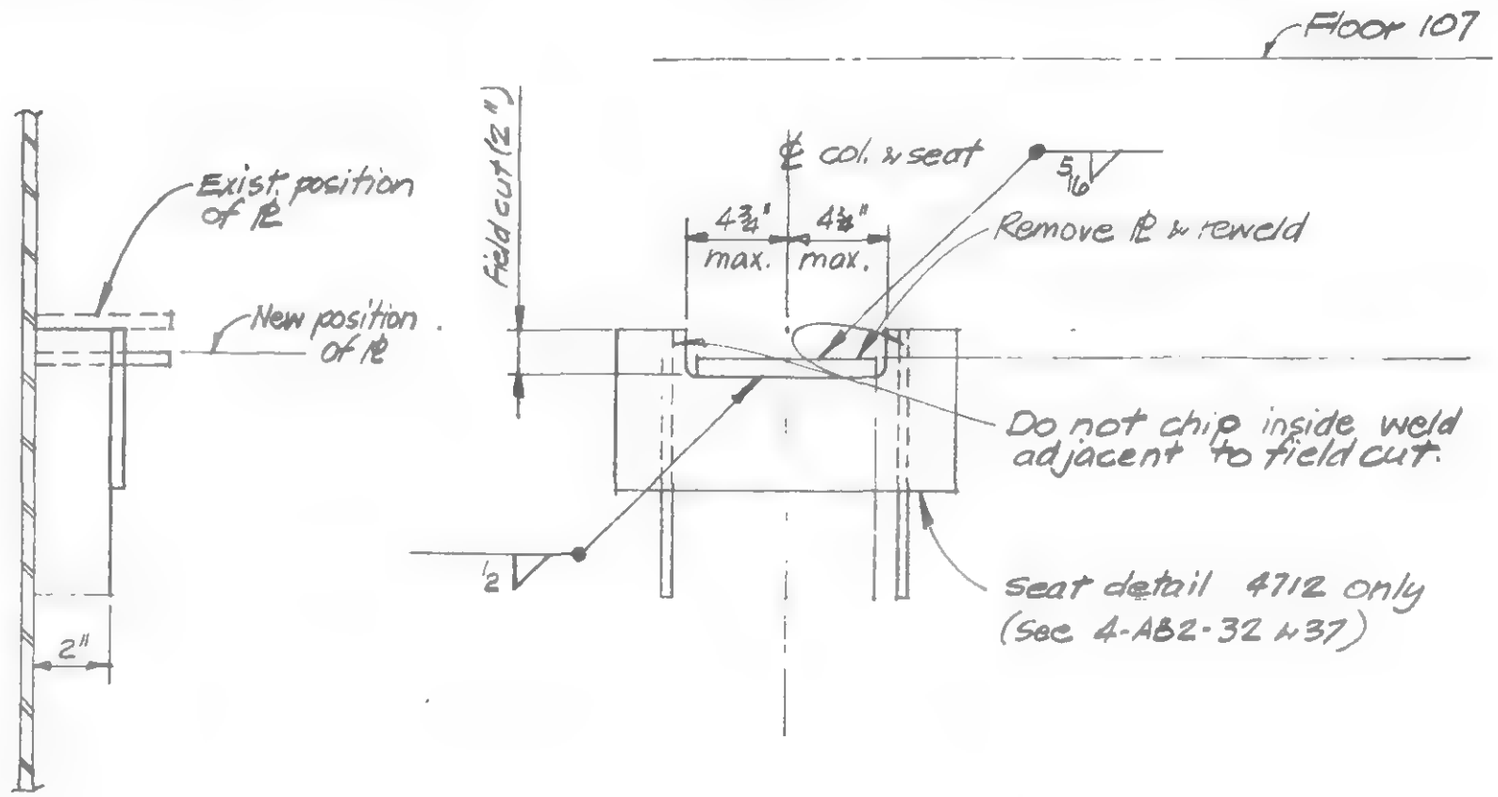


Detail 993-A

See SB-115 for location

LICENSED PROFESSIONAL ENGINEER — LESLIE E. ROBERTSON — No. 34360 — UNIVERSITY OF THE STATE OF NEW YORK

DESIGNED: WAB

DRAWN: R Oelli

REVIEWED:

19-B-993

SKILLING, HELLE, CHRISTIANSEN, ROBERTSON — Structural & Civil Engineers

PROJECT: THE WORLD TRADE CENTER

TITLE: COLUMN SPLICE REPAIR - FLOOR 108 TOWER B

DATE: 3-15-71

REVISIONS

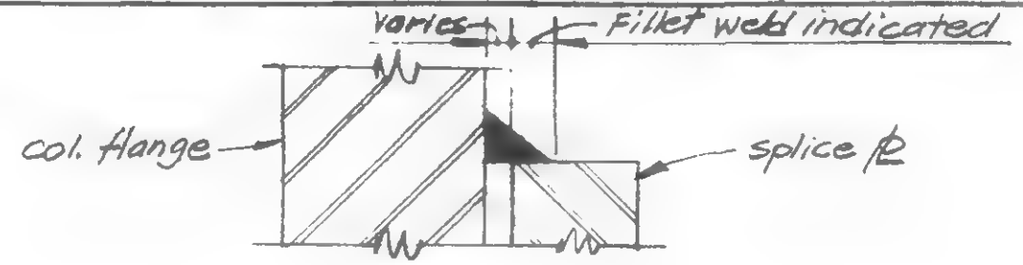


Detail A

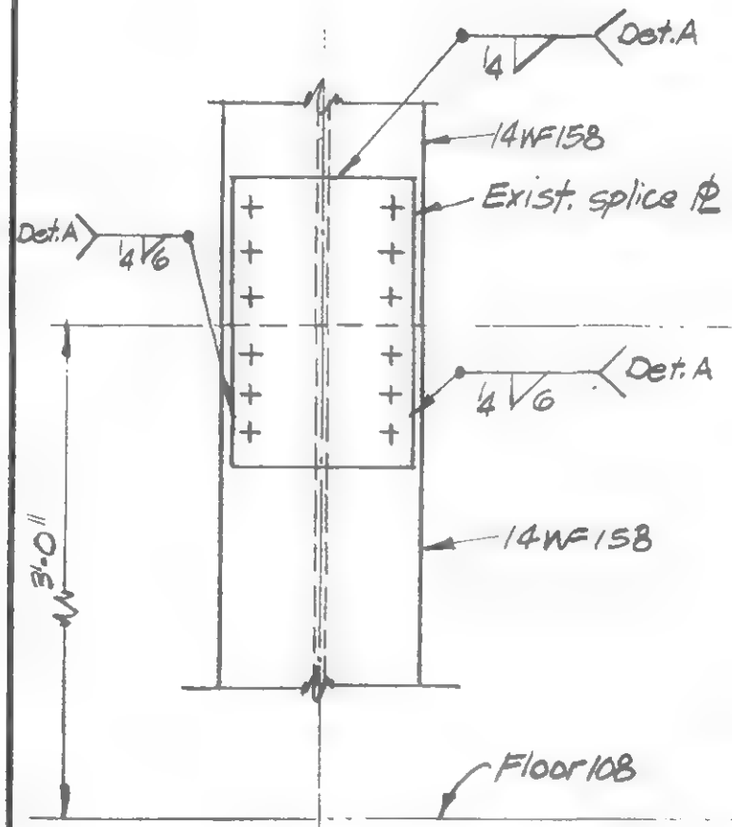


Detail 994A

cols. 502, 503, 506, 507
1002, 1003, 1006, 1007

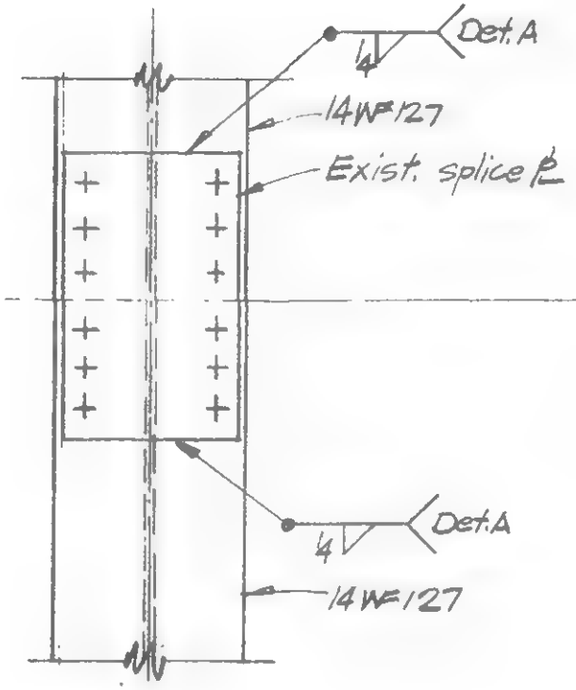


Detail 994B

cols. 601, 608
901, 908

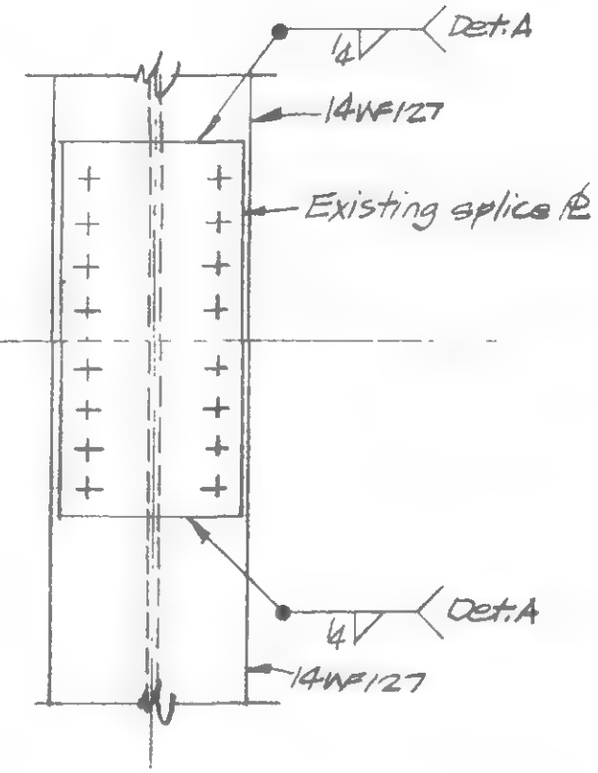


Detail 994C

cols. 602, 603, 606, 607
902, 903, 906, 907

Note:
1. All bolts must be torqued prior to weld being installed.
2. Welding shall be accomplished using E70xx electrodes.
3. See SB-401 & SB-402 for location.

LICENSED PROFESSIONAL ENGINEER — LESLIE E. ROBERTSON — No. 34360 — UNIVERSITY OF THE STATE OF NEW YORK

DESIGNED: WAB

DRAWN: pozeli

REVIEWED:

19-B-994

SKILLING, HELLE, CHRISTIANSEN, ROBERTSON — Structural & Civil Engineers

PROJECT: THE WORLD TRADE CENTER

TITLE: FIELD REPAIR El. 310 SPANDREL TOWER 'A'

DATE: 3-18-77

REVISIONS

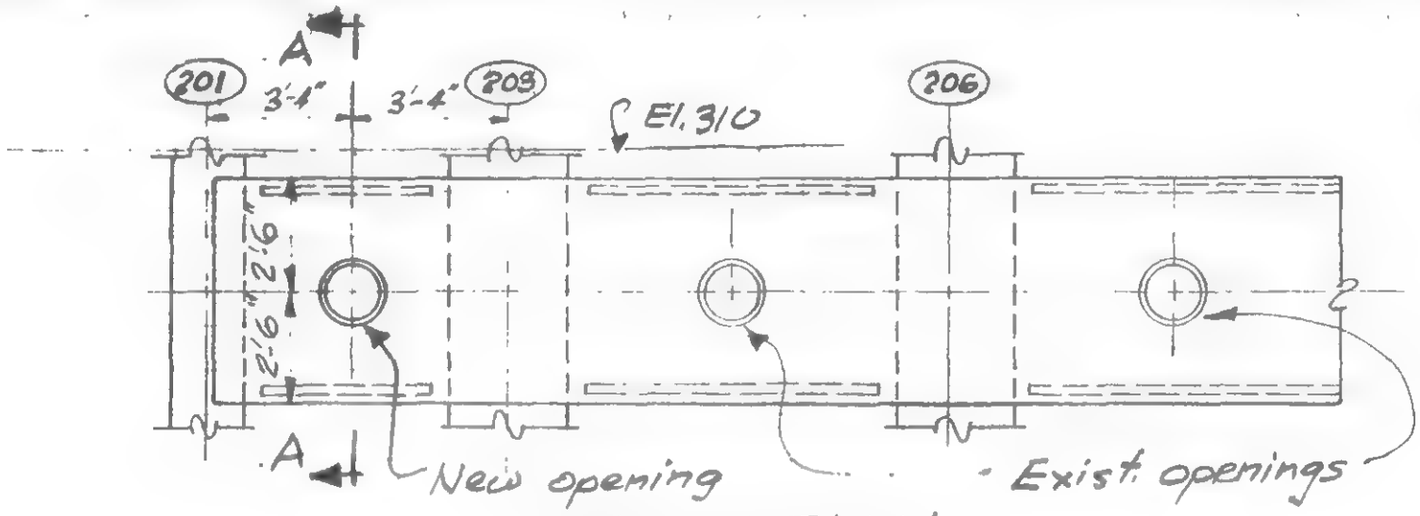


ELEVATION

Note 1
Cut bevel in existing spandrel ℞'s with air-arc gouge. Increase fillet weld size by 1/16 inch for each 1/8 inch of clearance between spandrel ℞ and pipe in excess of the first 1/16 inch of clearance.

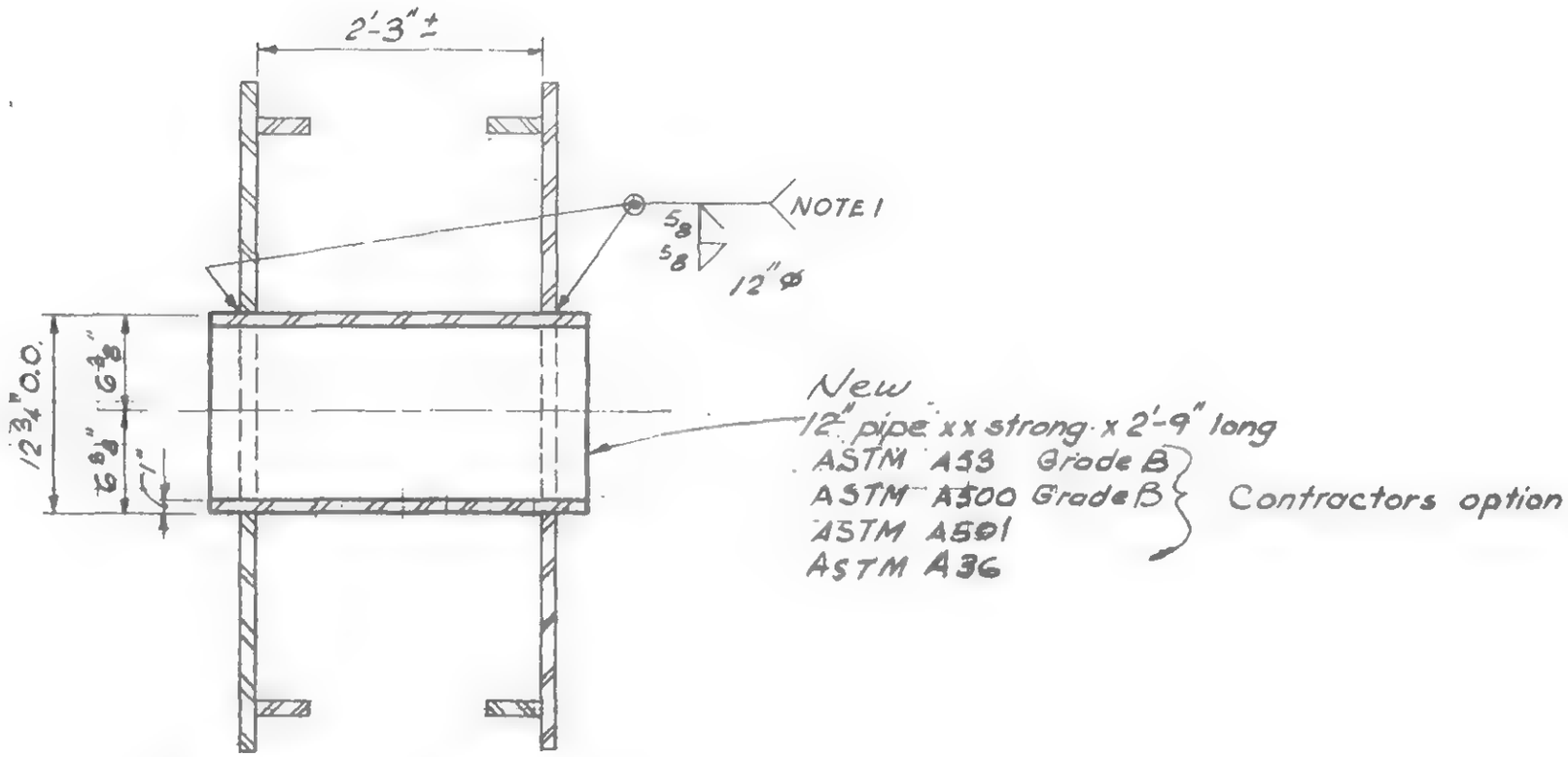


SECTION A-A

LICENSED PROFESSIONAL ENGINEER
LESLIE E. ROBERTSON
NO. 34360
UNIVERSITY OF THE STATE OF NEW YORK

DESIGNED

DRAWN
T. Robertson

REVIEWED

19-A-995

SKILLING, HELLE, CHRISTIANSEN, ROBERTSON — Structural & Civil Engineers

PROJECT: THE WORLD TRADE CENTER | TITLE: TRUSS BOTTOM CHORD TO BEAM CONN. | DATE: 4-15-71

REVISIONS

# SCHEDULE OF DETAIL LOCATION AND TYPE

| TOWER | FLOOR | Exterior column number opposite detail location | | | | | | | | | | | | | | | | | | | |
|---|---|---|---|---|---|---|---|---|---|---|---|---|---|---|---|---|---|---|---|---|---|
| | | 101 | 103 | 105 | 107 | 109 | 151 | 153 | 155 | 157 | 159 | 359 | 357 | 355 | 353 | 351 | 309 | 307 | 305 | 303 | 301 |
| TOWER A | 44 | NR | 3 | NR | 3 | 3 | 3 | 3 | NR | 3 | NR | NR | 3 | NR | 3 | 3 | 3 | 3 | NR | 3 | NR |
| | 45 | | | | | | 3 | 3 | NR | 3 | NR | NR | 3 | NR | 3 | 3 | 3 | 3 | NR | 3 | NR |
| | 46 | | | | | | | | | | | NR | 3 | NR | 3 | 3 | 3 | 3 | NR | 3 | NR |
| | 47 | | | | | | | | | | | NR | 3 | NR | 3 | NR | NR | 3 | NR | 3 | NR |
| | 48 | | | | | | | | | | | NR | 3 | NR | 3 | NR | NR | 3 | NR | 3 | NR |
| | 49 | | | | | | | | | | | NR | 3 | NR | 3 | 3 | 3 | 3 | NR | 3 | NR |
| | 78 | NR | 3 | NR | 3 | 3 | 3 | 3 | NR | 3 | NR | NR | 3 | NR | 3 | 3 | 3 | 3 | NR | 3 | NR |
| | 79 | NR | 3 | NR | 3 | 3 | 3 | 3 | NR | 3 | NR | | | | | | 3 | 3 | NR | 3 | NR |
| | 80 | NR | 3 | NR | 3 | 3 | 3 | 3 | NR | 3 | NR | | | | | | | | | | |
| | 81 | NR | 3 | NR | 3 | NR | NR | 3 | NR | 3 | NR | | | | | | | | | | |
| | 82 | NR | 3 | NR | 3 | 3 | 3 | 3 | / | / | NR | | | | | | | | | | |
| | 83 | NR | / | / | / | / | / | / | / | / | NR | | | | | | | | | | |
| TOWER B | 44 | NR | 3 | NR | 3 | 3 | 3 | 3 | NR | 3 | NR | NR | 3 | NR | 3 | 3 | 3 | 3 | NR | 3 | NR |
| | 45 | | | | | | 3 | 3 | NR | 3 | NR | NR | 3 | NR | 3 | 3 | 3 | 3 | NR | 3 | NR |
| | 46 | | | | | | | | | | | NR | 3 | NR | 3 | 3 | 3 | 3 | NR | 3 | NR |
| | 47 | | | | | | | | | | | NR | 3 | NR | 3 | NR | NR | 3 | NR | 3 | NR |
| | 48 | | | | | | | | | | | NR | 3 | NR | 3 | NR | NR | 3 | NR | 3 | NR |
| | 49 | | | | | | | | | | | NR | 3 | NR | 3 | 3 | 3 | 3 | NR | 3 | NR |
| | 78 | NR | 2 | NR | 2 | 2 | 2 | 2 | NR | 2 | NR | NR | 2 | NR | 2 | 2 | 2 | 2 | NR | 2 | NR |
| | 79 | NR | 2 | NR | 2 | 2 | 2 | 2 | NR | 2 | NR | | | | | | 2 | 2 | NR | 2 | NR |
| | 80 | NR | 2 | NR | 2 | 2 | 2 | 2 | NR | 2 | NR | | | | | | | | | | |
| | 81 | NR | 2 | NR | 2 | NR | NR | 2 | NR | 2 | NR | | | | | | | | | | |
| | 82 | NR | 2 | NR | 2 | 2 | 2 | 2 | NR | 2 | NR | | | | | | | | | | |
| | 83 | NR | 2 | NR | 2 | 2 | 2 | 2 | NR | 2 | NR | | | | | | | | | | |

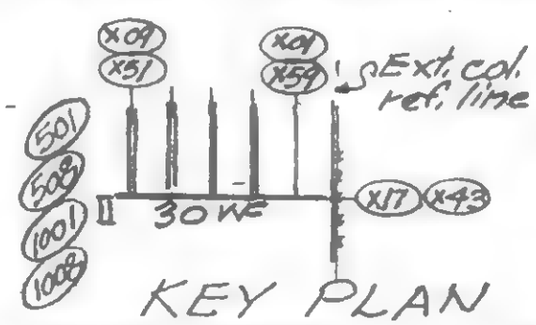

KEY PLAN

Notes:
1. Detail 1 is existing in locations indicated
2. For Detail 2 & 3 see 19-AB-996.2
3. NR indicates detail not required
4. / indicates detail not applicable

LICENSED PROFESSIONAL ENGINEER — LESLIE E. ROBERTSON — No. 34360 — UNIVERSITY OF THE STATE OF NEW YORK

DESIGNED: JTM, WAB

DRAWN:

REVIEWED: WAB

19-AB-996.1

SKILLING, HELLE, CHRISTIANSEN, ROBERTSON — Structural & Civil Engineers

PROJECT: THE WORLD TRADE CENTER | TITLE: TRUSS BOTTOM CHORD TO BEAM CONN. | DATE: 4-15-71

REVISIONS

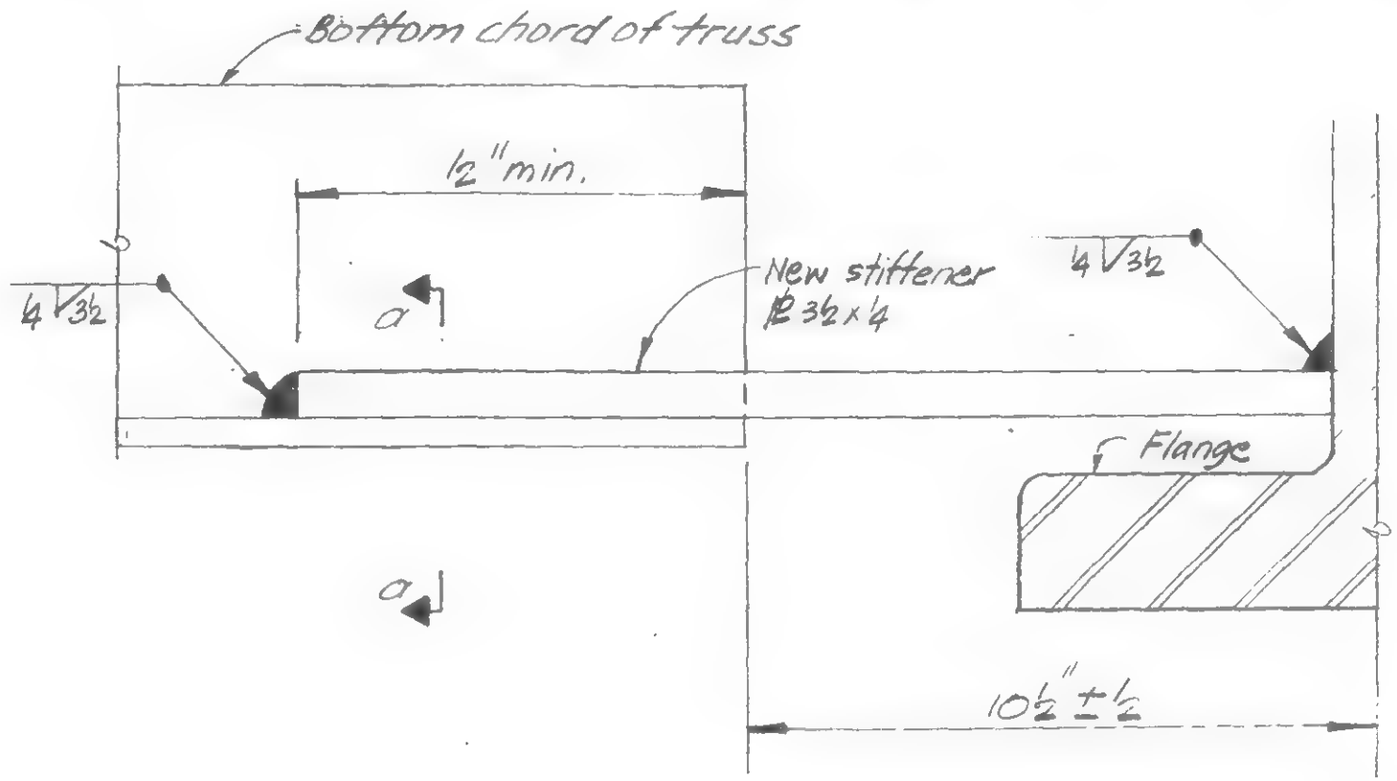


Elevation

PROCEDURE

Detail 2 -
1. Straighten web of beam to vertical position.
2. Weld stiffener plate to web.
3. Hold beam in position.
4. Weld stiffener plate to bottom chord of truss.

Detail 3 -
1. Weld stiffener plate to web.
2. Weld stiffener plate to bottom chord of truss.

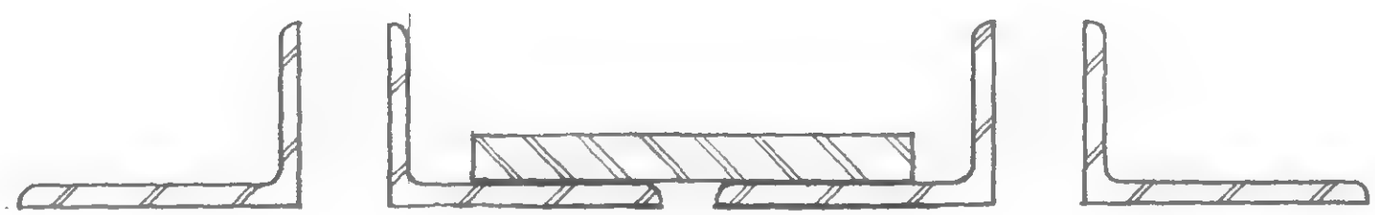

Section a-a

Details 2 and 3

LICENSED PROFESSIONAL ENGINEER — LESLIE E. ROBERTSON — No. 34380 — UNIVERSITY OF THE STATE OF NEW YORK

DESIGNED: LEL, JTM
DRAWN: JA
REVIEWED: JMB

19-AB-996.2

SKILLING, HELLE, CHRISTIANSEN, ROBERTSON — Structural & Civil Engineers

PROJECT: THE WORLD TRADE CENTER | TITLE: NEW PLANK WALL SUPPORT – INTERMEDIATE LEVEL | DATE: 6/8/71

REVISIONS

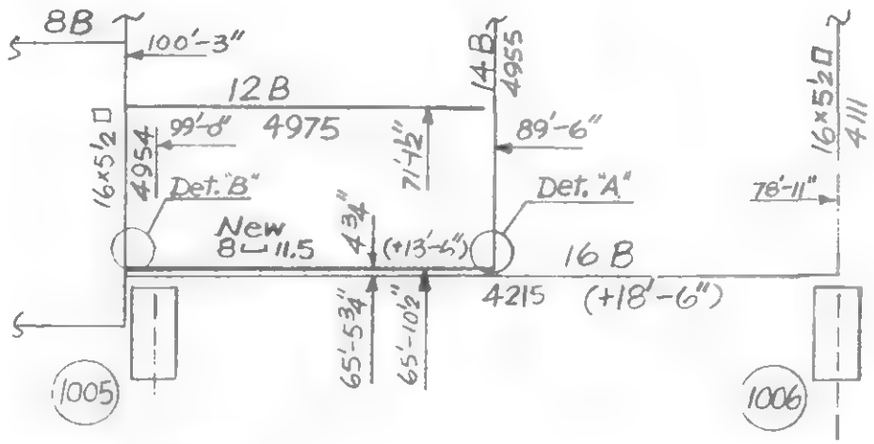


Note:
All framing at 14'-0" from reference floor line, El. 310'-0", except as noted.

Part of framing plan
Intermediate level

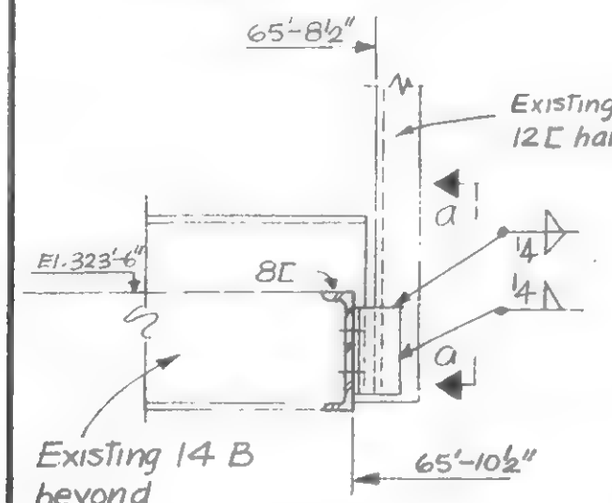


Detail "A"
1" = 1'-0"

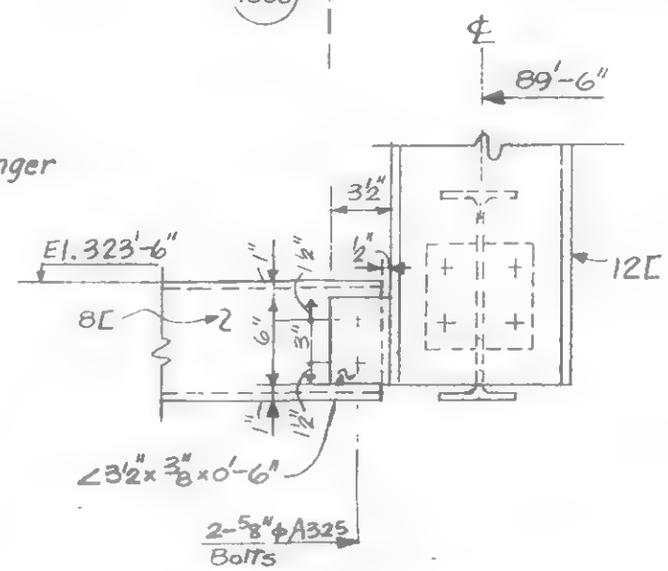


Section a-a
1" = 1'-0"

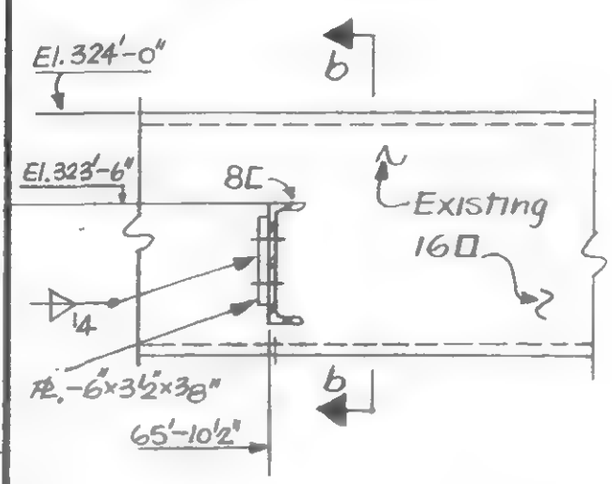


Detail "B"
1" = 1'-0"

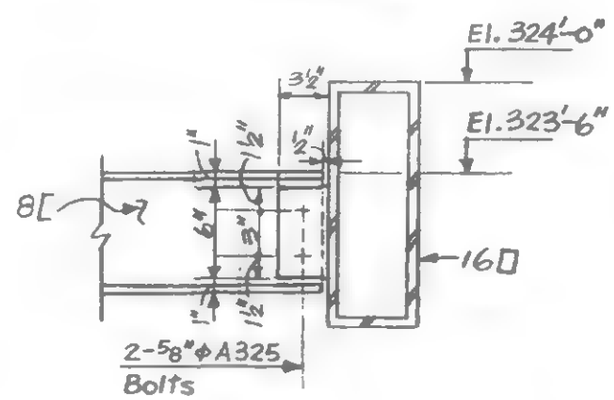


Section b-b
1" = 1'-0"

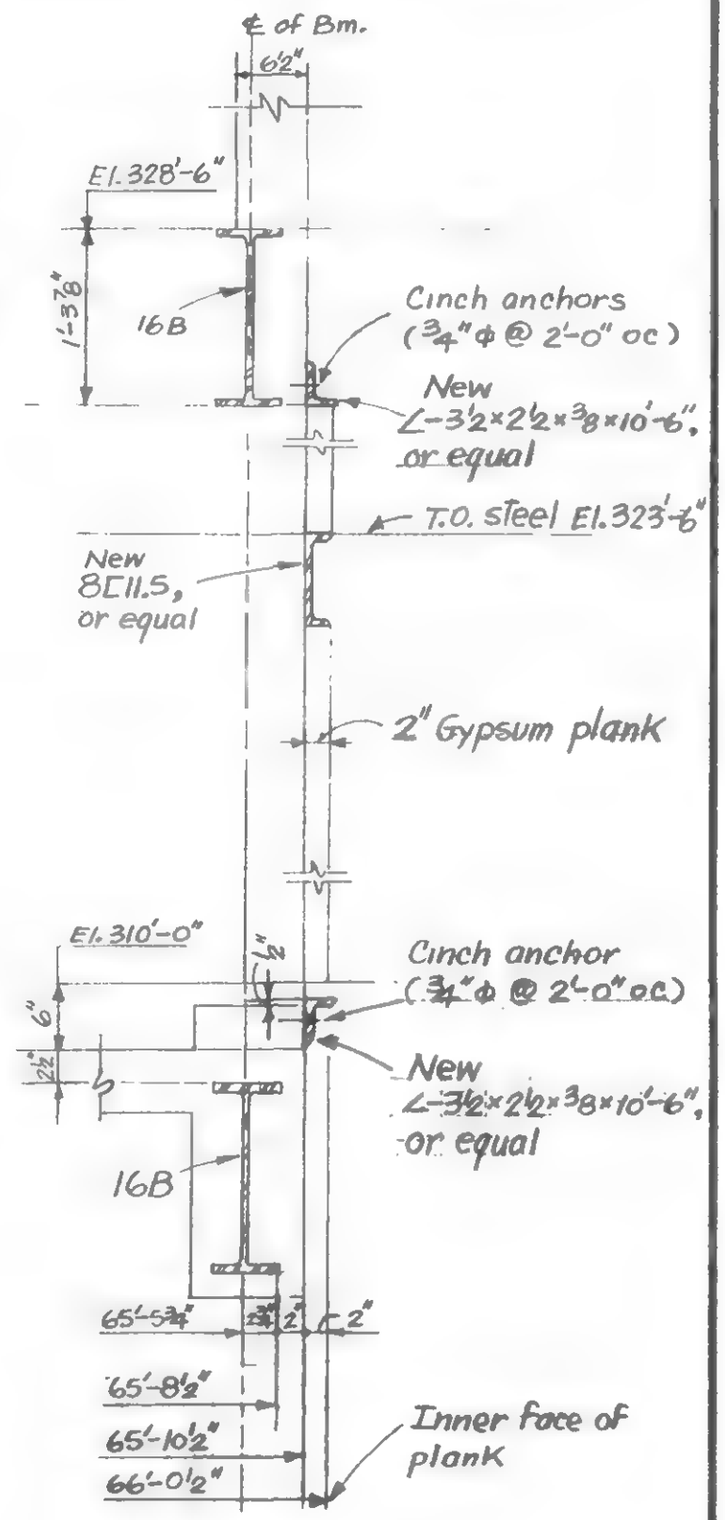


¾" = 1'-0"

LICENSED PROFESSIONAL ENGINEER — LESLIE E. ROBERTSON — No 34360 — UNIVERSITY OF THE STATE OF NEW YORK

DESIGNED

DRAWN D. Chew

REVIEWED

19-AB-998

SKILLING, HELLE, CHRISTIANSEN, ROBERTSON — Structural & Civil Engineers

PROJECT: THE WORLD TRADE CENTER | TITLE: FIELD INSTALLATION OF BEAMS AT WINDOW WASHER LIFT | DATE: 7/2/71

REVISIONS

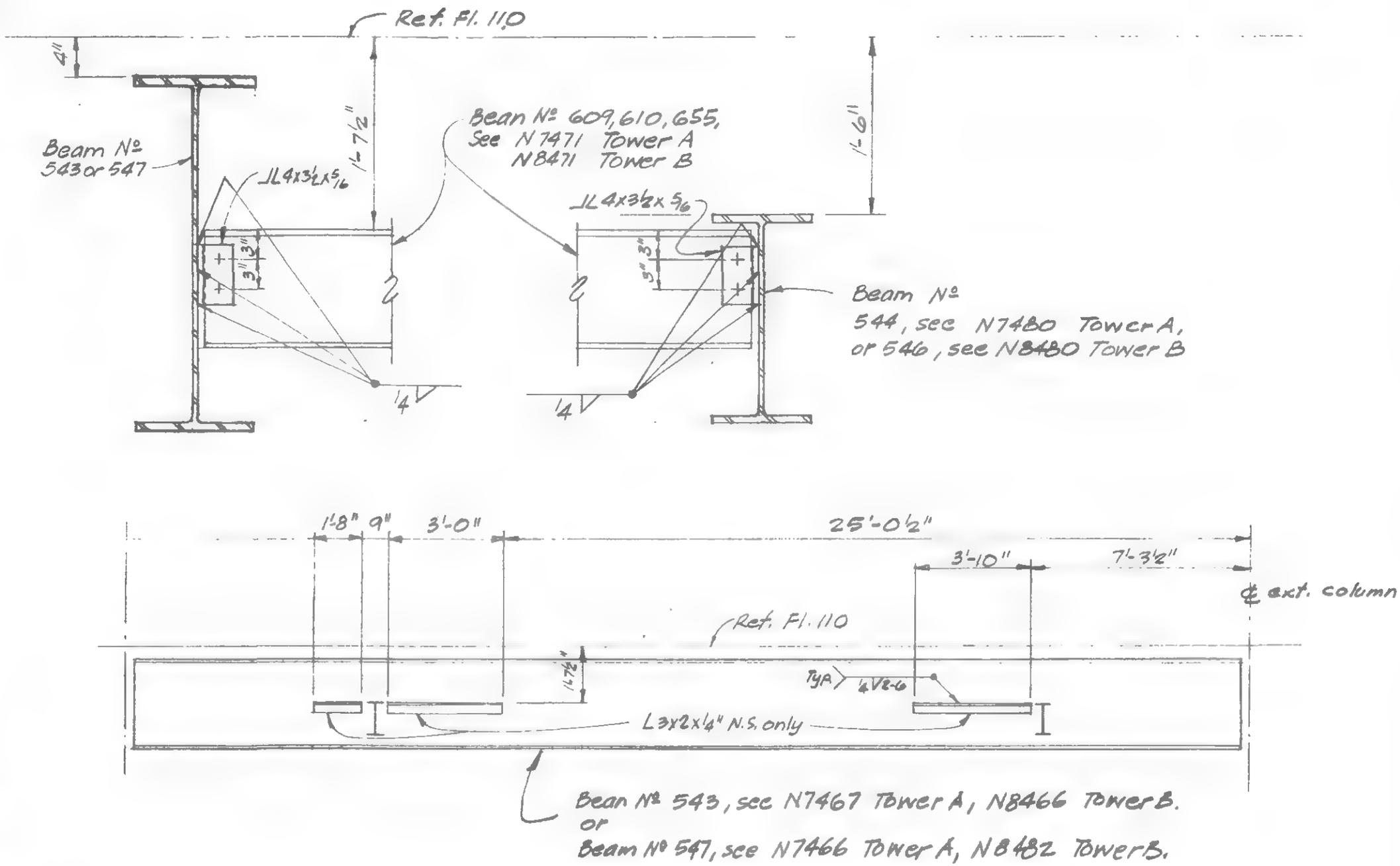


LICENSED PROFESSIONAL ENGINEER — LESLIE E. ROBERTSON — No. 34360 — UNIVERSITY OF THE STATE OF NEW YORK

DESIGNED

DRAWN P.M.O'Rourke

REVIEWED

19-AB-999

SKILLING, HELLE, CHRISTIANSEN, ROBERTSON — Structural & Civil Engineers

PROJECT: THE WORLD TRADE CENTER | TITLE: PANEL 245 A12-9 | DATE: 6-5-69

REVISIONS

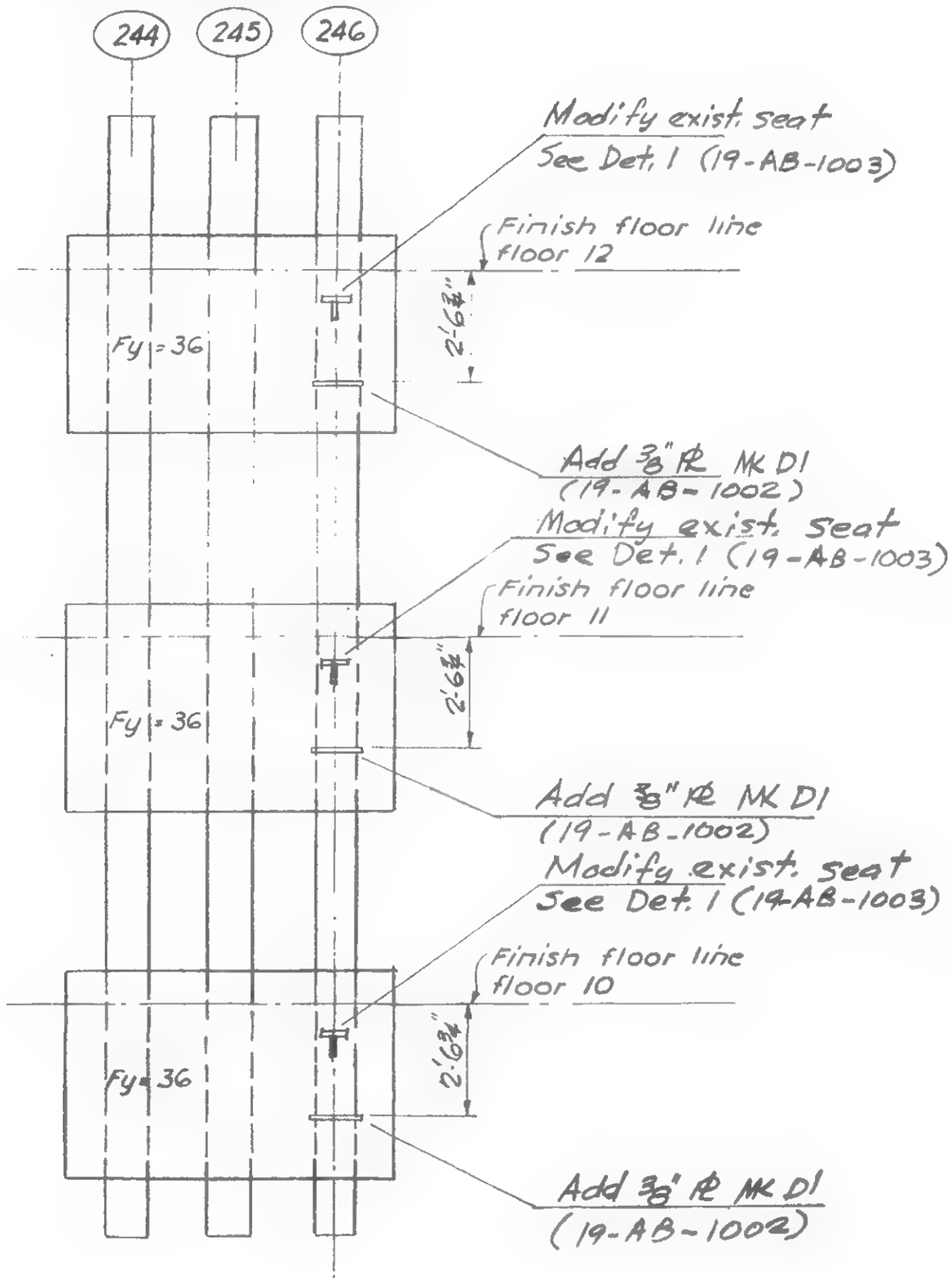


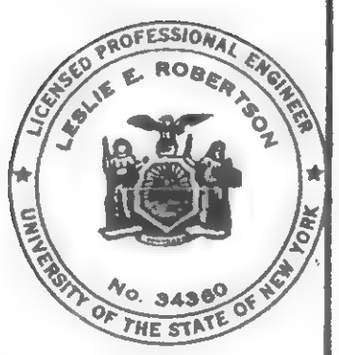


DESIGNED

DRAWN F. Smith

REVIEWED

19-A-1001

SKILLING, HELLE, CHRISTIANSEN, ROBERTSON — Structural & Civil Engineers

PROJECT: THE WORLD TRADE CENTER | TITLE: EXTERIOR WALL PANEL - SEAT DETAIL D | DATE: 6-5-69

REVISIONS

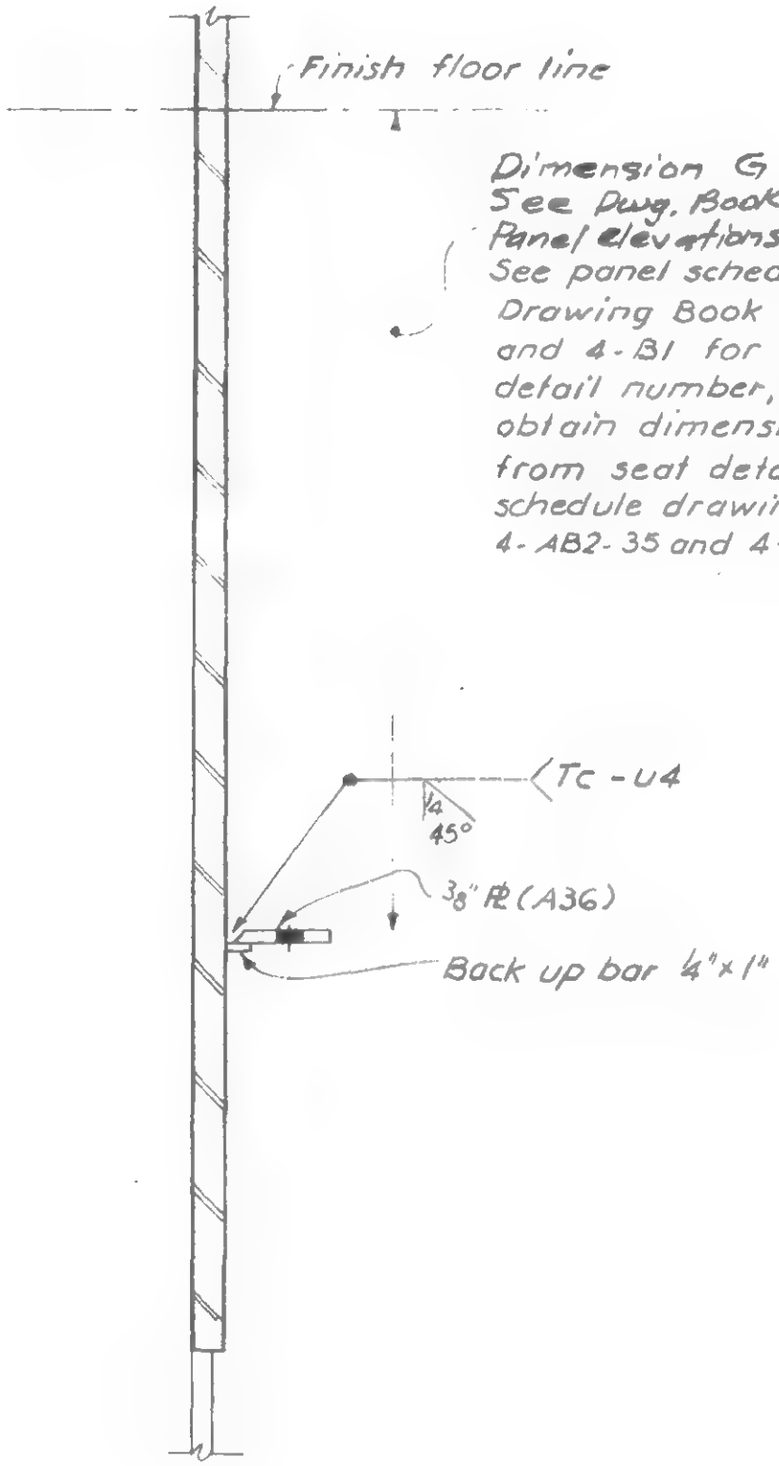


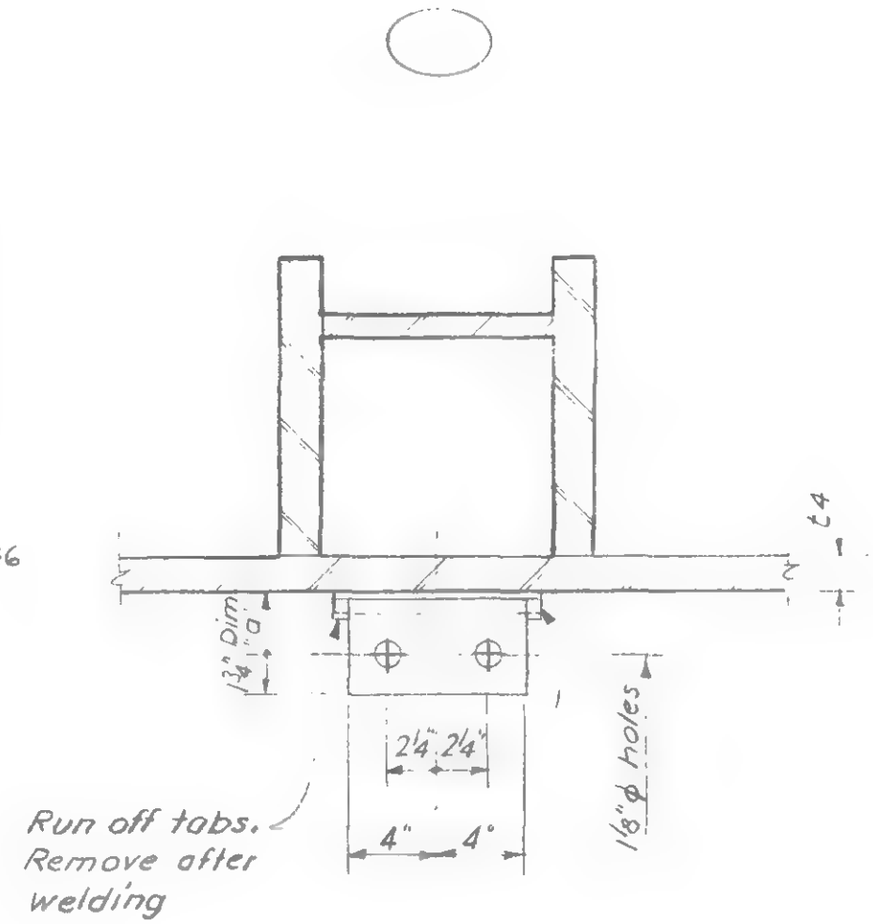


| MK | DIM "a" | t4 | FLOORS |
|---|---|---|---|
| D1 | 2 7/8" | 1 3/8" - 1 1/8" | 10 - 32 |
| D2 | 3 1/8" | 1 1/16" - 7/8" | 33 - 48 |
| D3 | 3 3/8" | 13/16" - 5/8" | 49 - 70 |
| D4 | 3 5/8" | 9/16" - 3/8" | 71 - 107 |

LICENSED PROFESSIONAL ENGINEER
LESLIE E. ROBERTSON
No. 34260
UNIVERSITY OF THE STATE OF NEW YORK

DESIGNED

DRAWN F. Smith

REVIEWED

19-AB-1002

SKILLING, HELLE, CHRISTIANSEN, ROBERTSON — Structural & Civil Engineers

PROJECT: THE WORLD TRADE CENTER | TITLE: EXTERIOR WALL PANEL - SEAT DETAIL 1 | DATE: 6-5-69

REVISIONS

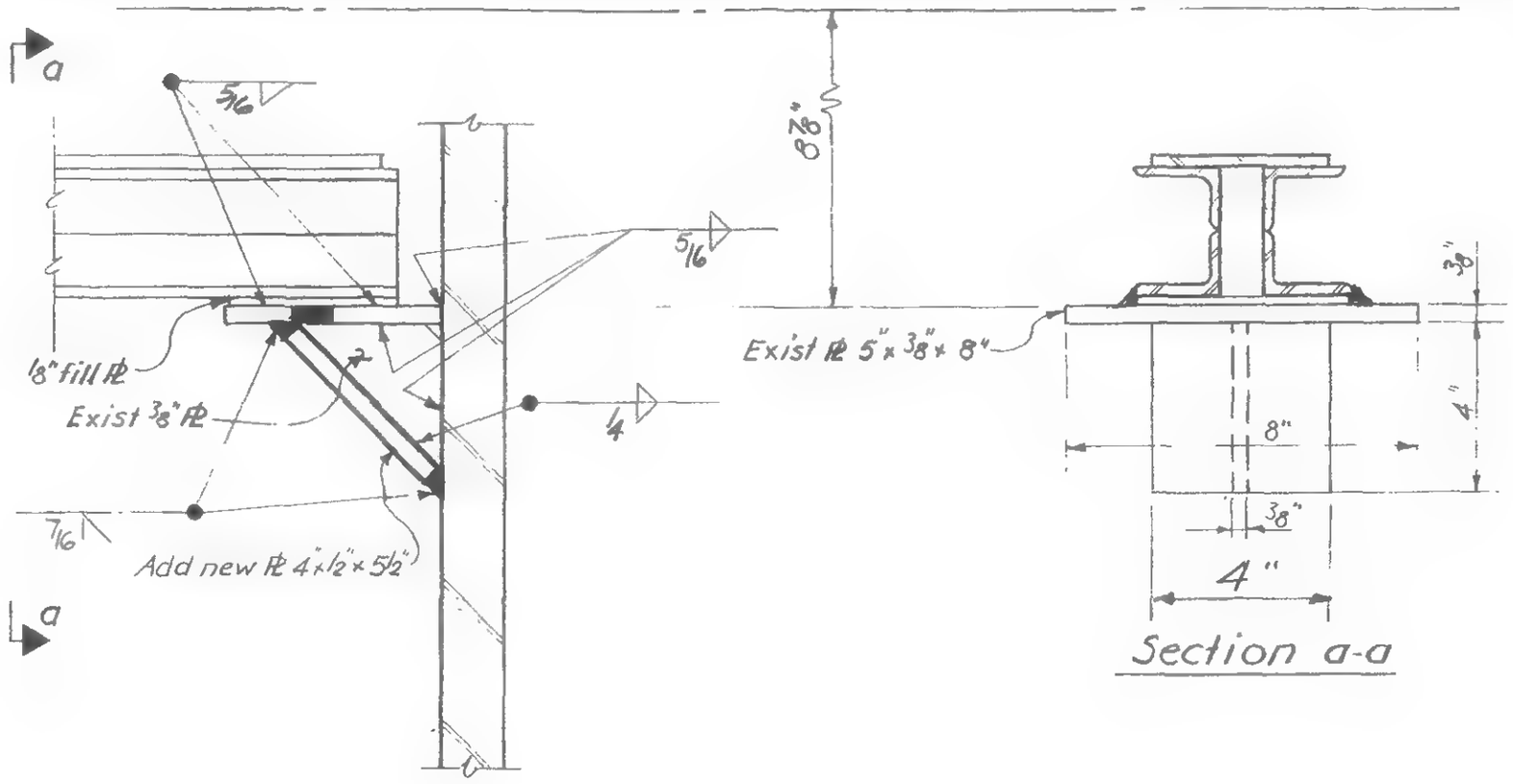


LICENSED PROFESSIONAL ENGINEER
LESLIE E. ROBERTSON
No. 34360
UNIVERSITY OF THE STATE OF NEW YORK

DESIGNED

DRAWN F. Smith

REVIEWED

19-AB-7003

SKILLING, HELLE, CHRISTIANSEN, ROBERTSON — Structural & Civil Engineers

PROJECT: THE WORLD TRADE CENTER | TITLE: EXTERIOR WALL - COLUMN SPLICE REPAIR PROCEDURE | DATE: 6-20-69

REVISIONS

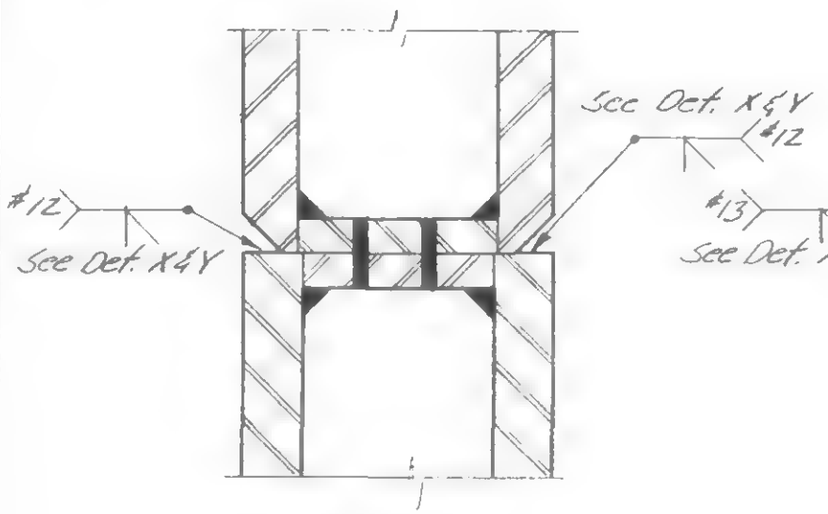


Section a-a

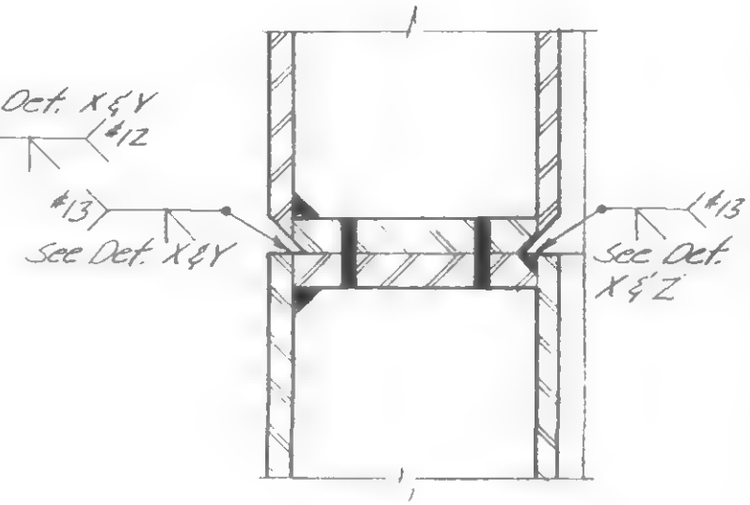


Section b-b

| COLUMN TYPES | WELD SIZE | |
|---|---|---|
| | WELD 12 | WELD 13 |
| 120 thru 122 | 1/2 | 1/2 |
| 123 thru 129 | 5/8 | 1/2 |
| 130 thru 134 | 3/4 | 1/2 |
| 135 thru 139 | 7/8 | 5/8 |
| 140 and 141 | 1 | 5/8 |
| 142 thru 145 | 1 1/8 | 5/8 |
| 146 thru 149 | 1 1/4 | 5/8 |
| 150 thru 155 | 1 5/8 | 5/8 |
| 156 thru 158 | 1 5/8 | 3/4 |
| 159 thru 164 | 1 3/4 | 3/4 |

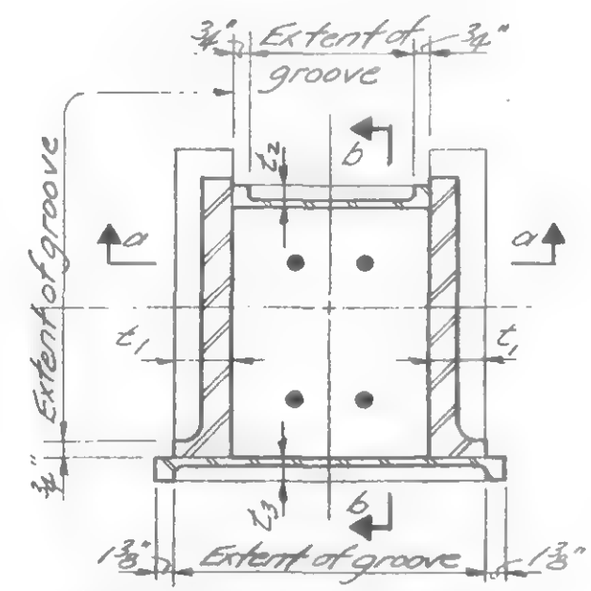


PLAN ABOVE SPLICE

Column Type 128-164

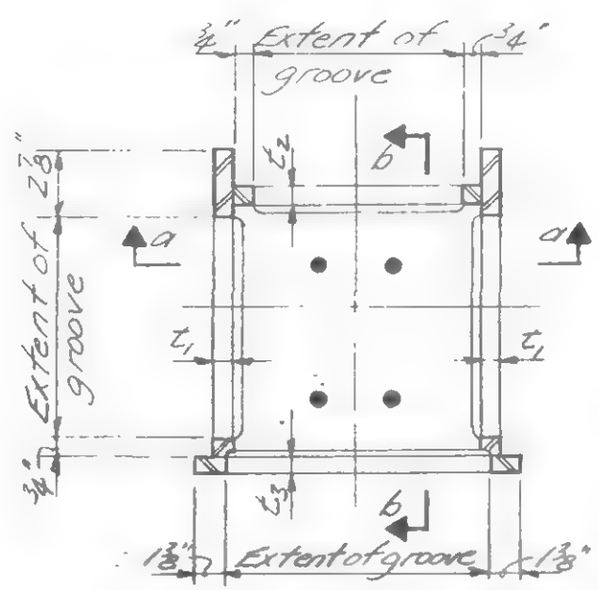


PLAN ABOVE SPLICE

Column Type 120-127

| WELDING ELECTRODE TABLE | | | |
|---|---|---|---|
| Fy GREATER THAN | Fy EQUAL OR LESS THAN | ASTM SPEC | CLASS |
| | 36 | A233 | E70XX |
| 36 | 50 | A233 | E70XX |
| 50 | 70 | A316 | E80XX |
| 70 | 80 | A316 | E90XX |
| 80 | 90 | A316 | E100XX |
| 90 | | A316 | E110XX |

Low hydrogen electrodes shall be used.

NOTE: Column splices may be welded as shown if the bolt hole diameter or pattern preclude the use of specified splice bolts.

NOTES:

1. Weld size shall be determined by the upper column type at the splice.
2. Preparation for welds shall be accomplished by arcair gouging to dimensions shown in schedule.
3. For Detail X, Y, Z see 19-AB-1004.2
4. Erector to supply shims of 18 ga. stock, where required, to maintain full bearing. Shim material to be ASTM A245, Grade D. For plan of shim see 4-AB2-12.
5. Preheat shall be not less than AWS minimums and shall conform, wherever applicable, to steel manufacturer's recommendations.
6. Welding electrodes shall be determined by the Fy of the upper column type at the splice. See welding electrode table.

DESIGNED: H. I. GELLER

DRAWN: J. Adams

REVIEWED: W. Brewer

19-AB-1004.1

SKILLING - HELLE - CHRISTIANSEN - ROBERTSON  Structural & Civil Engineers

PROJECT: THE WORLD TRADE CENTER | TITLE: EXTERIOR WALL - COLUMN SPLICE REPAIR PROCEDURE | DATE: 6-20-69

REVISIONS

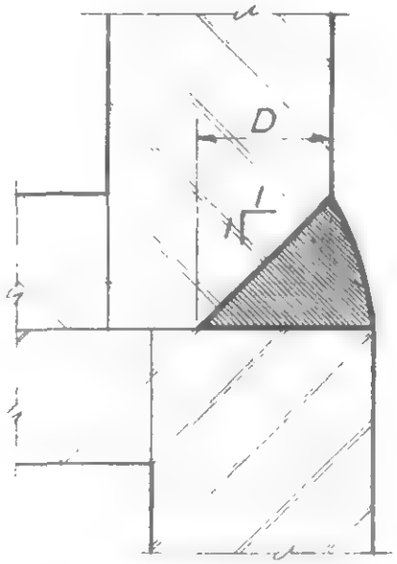


Case 1

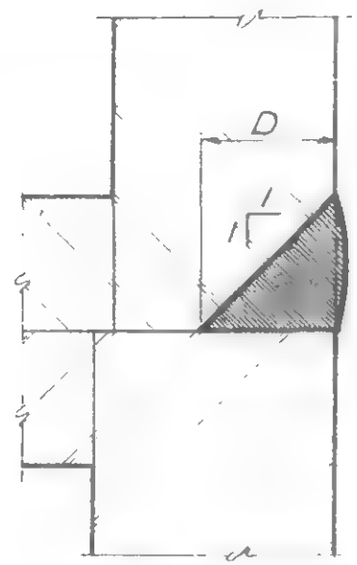


Case 2

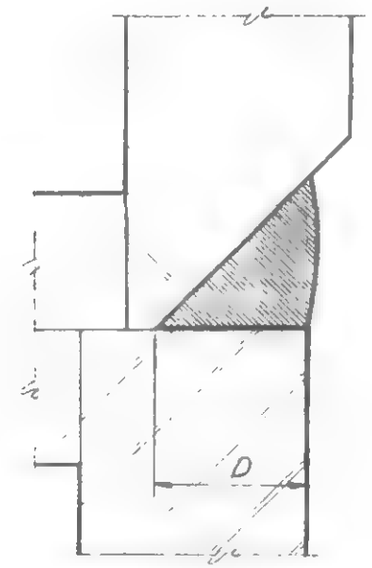


Case 3

## DETAIL X

Showing field welding of welds #12 & #13

D = Scheduled weld size for weld #12 or #13

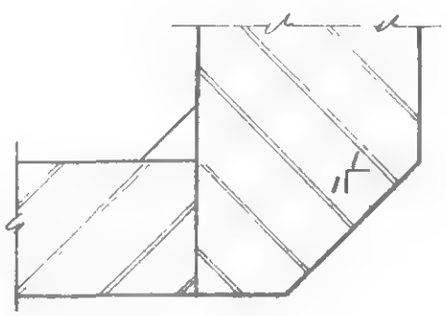


T1 or T2 > weld #12 or #13

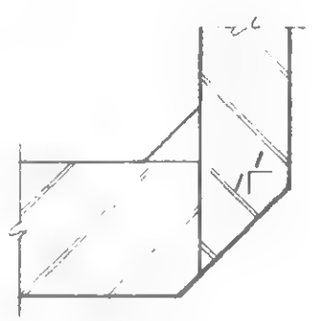


T1 or T2 < weld #12 or #13

## DETAIL Y

Showing edge preparation for weld #12 & #13

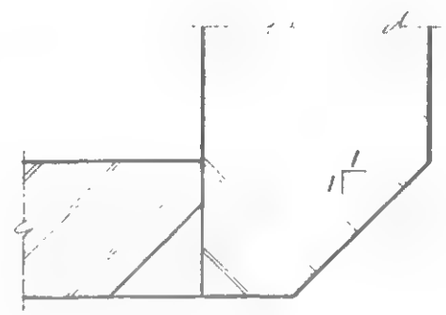


T3 > weld #13

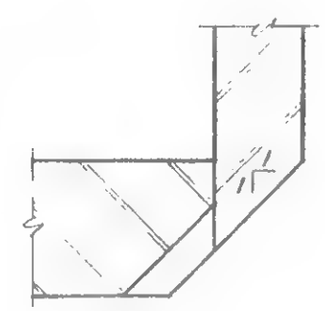


T3 < weld #13

## DETAIL Z

Showing edge preparation for weld #13

LICENSED PROFESSIONAL ENGINEER LESLIE E. ROBERTSON No. 34360 UNIVERSITY OF THE STATE OF NEW YORK

DESIGNED H. I. GELLER

DRAWN J. Gricius

REVIEWED C. Brewer

19-AB-1004.2

SKILLING, HELLE, CHRISTIANSEN, ROBERTSON — Structural & Civil Engineers

PROJECT: THE WORLD TRADE CENTER

TITLE: EXTERIOR WALL-SPANDREL SPLICE REPAIR PROCEDURE

DATE: 6-20-69

REVISIONS

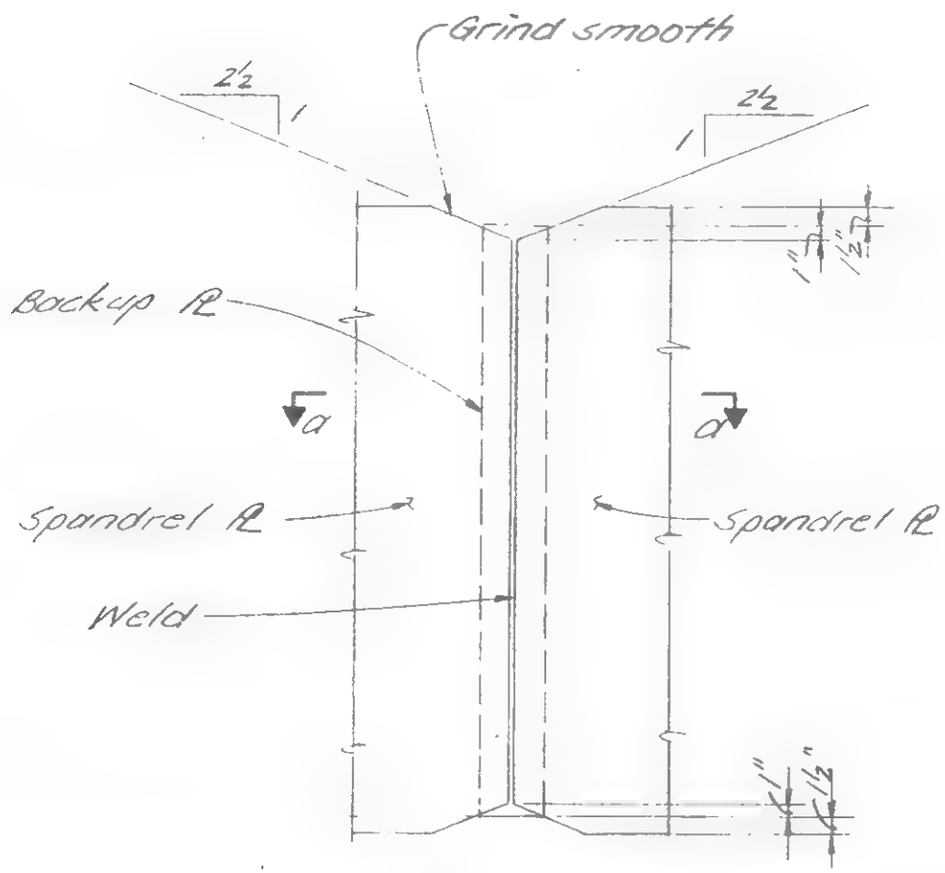


WELDED SPANDREL CONNECTION

NOTES:

A. Incorrect spandrel splice plates:
If the dimensions, thickness or hole pattern of the splice plates are incorrect, the plates should be discarded and replaced.

B. Incorrect hole pattern in spandrel plates:
Holes in spandrel plates that are not properly positioned should be filled with weld and ground flush. The correct hole pattern should then be drilled.

C. The spandrel plates may be butt welded as shown in lieu of the above procedures.

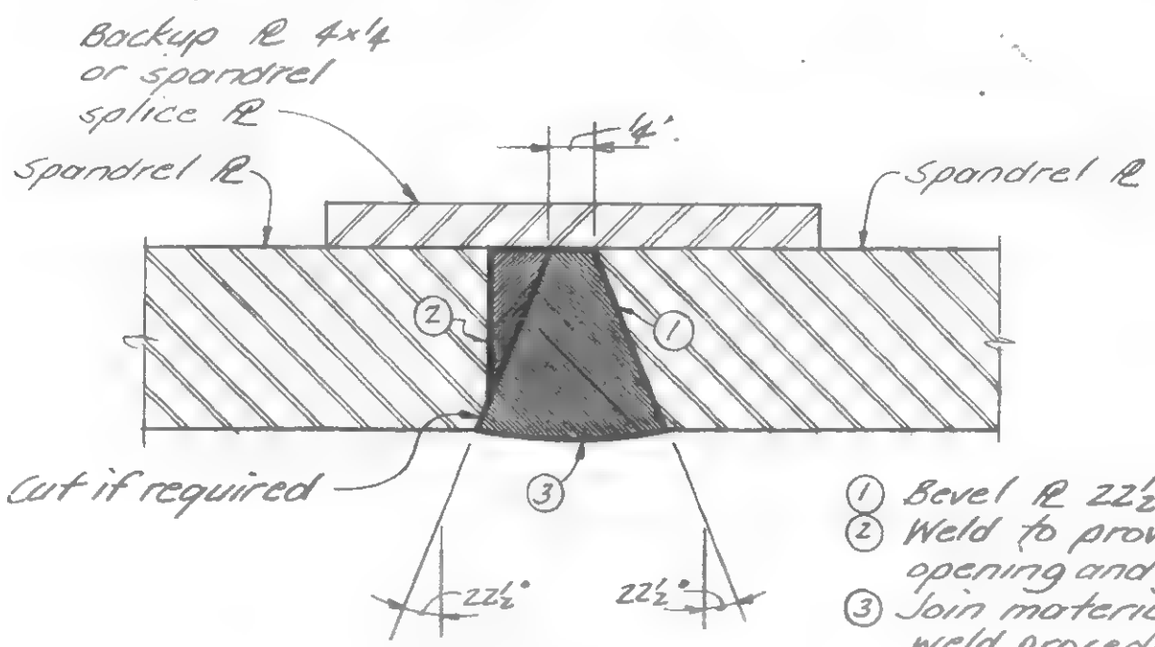


Section a-a

① Bevel PL 22½°
② Weld to provide ¼" root opening and 22½° bevel.
③ Join material by normal weld procedures (AWS BU-2)

Notes:

1. Welding electrode shall be determined by the higher Fy of the spandrel plates. See Welding Electrode Table, 19-AB-1004.
2. Preheat shall be not less than AWS minimum, and shall conform, wherever applicable, to the steel manufacturer's recommendations.

DESIGNED: H. I. GELLER

DRAWN: J. Adams

REVIEWED: W. Brewer

19-AB-1005

SKILLING - HELLE - CHRISTIANSEN - ROBERTSON  Structural & Civil Engineers

PROJECT THE WORLD TRADE CENTER | TITLE PUMP PLATFORM - EL 294 - TOWER A | DATE 8/7/69

REVISIONS

— For opening in grating see approved pump shop dwgs.

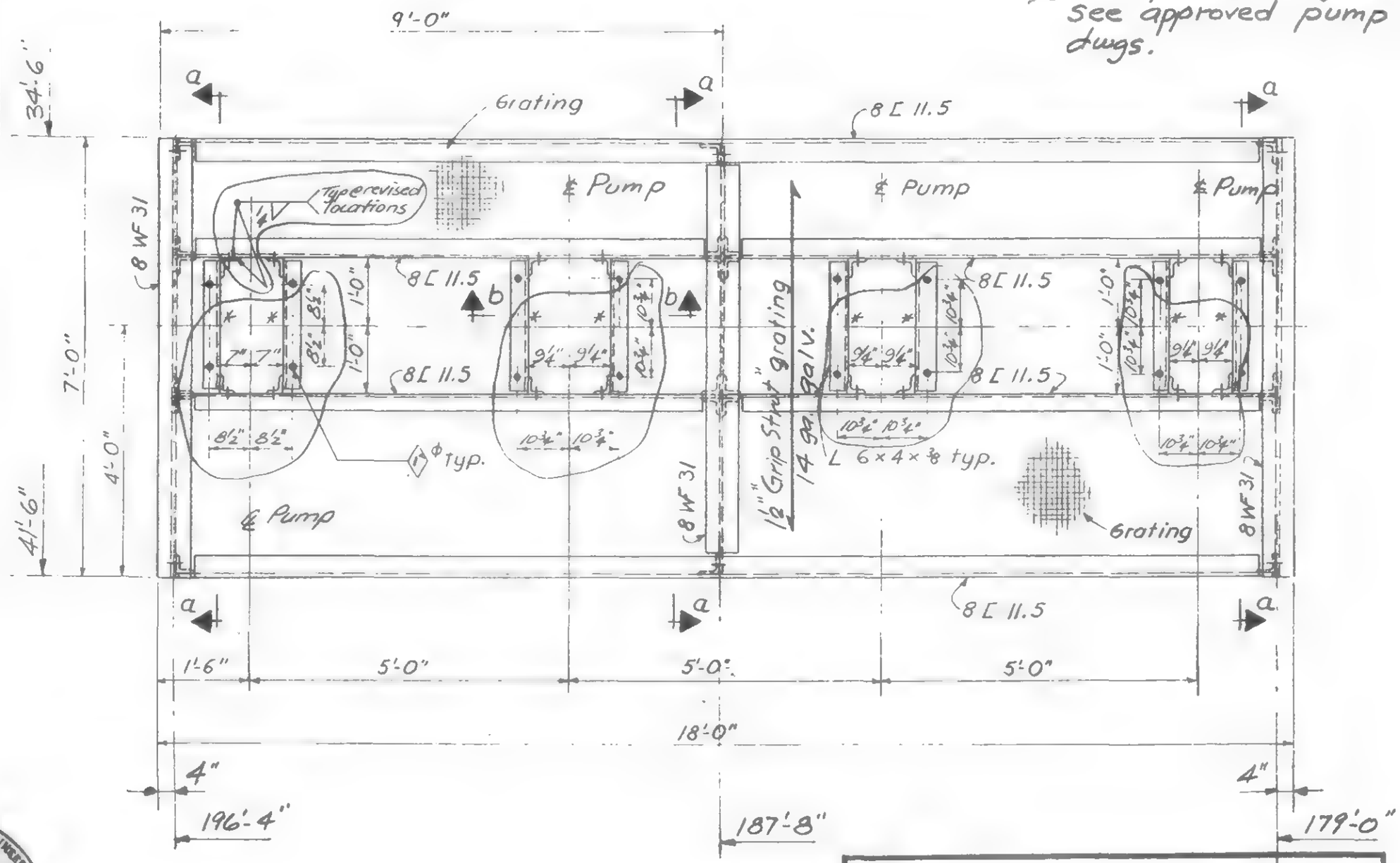


Revisions:

(+) Provide new 6×4×⅜ L and end clips. Connect to support Cs by field welds as shown.

(○). Revised pump bolt locations.

Reference Dwg: 6-A82-30

19-A-1010

SKILLING - HELLE - CHRISTIANSEN - ROBERTSON — Structural & Civil Engineers

PROJECT: THE WORLD TRADE CENTER | TITLE: PUMP PLATFORM @ 41ST FLOOR | DATE: 8-7-69

REVISIONS

8/29/69

Revisions: Add 6x2 ⊓'s @ pump base locations. Revisions included herein are circled.

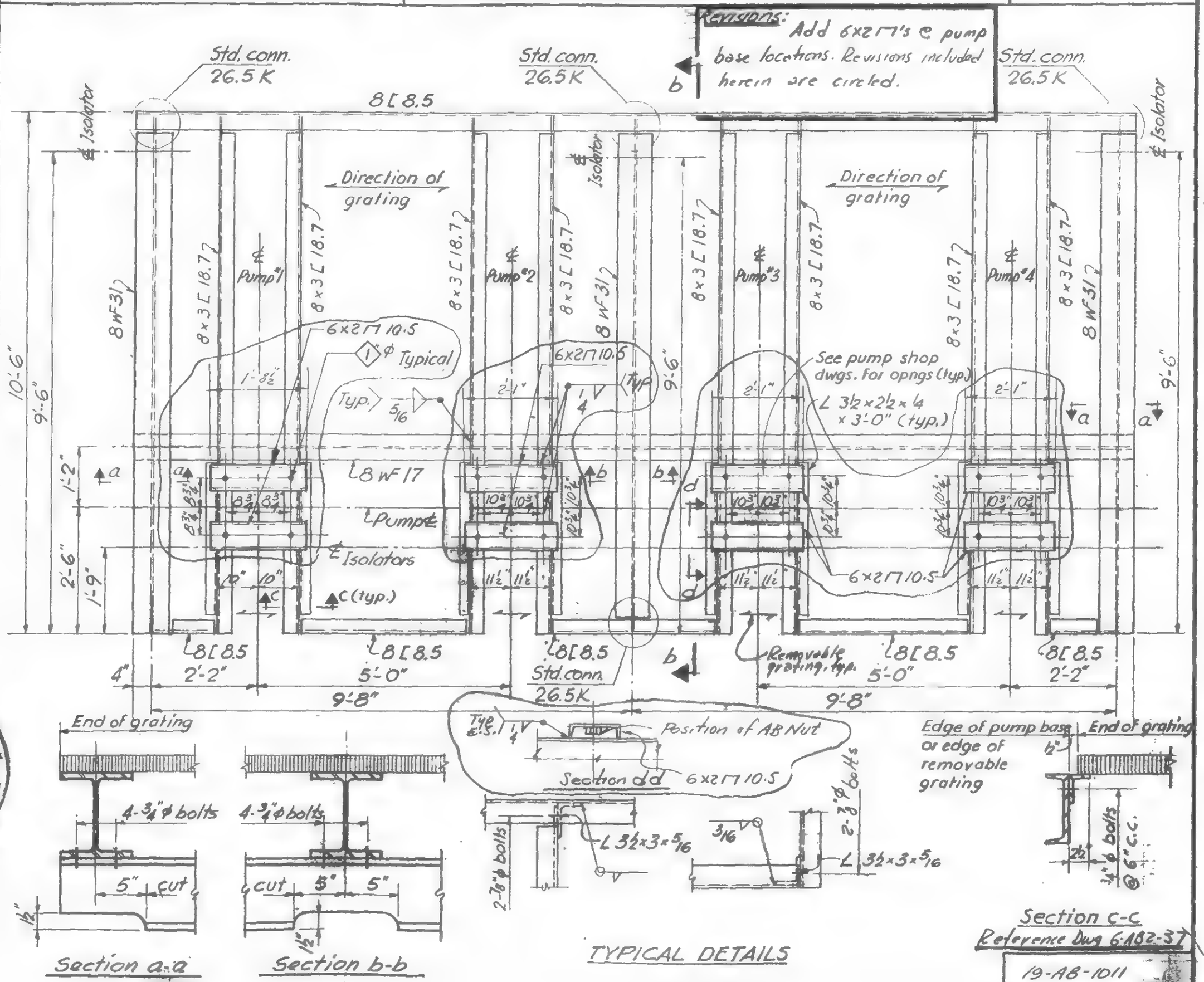


LICENSED PROFESSIONAL ENGINEER — LESLIE E. ROBERTSON — No. 34360 — UNIVERSITY OF THE STATE OF NEW YORK

19-AB-1011

SKILLING - HELLE - CHRISTIANSEN - ROBERTSON  Structural & Civil Engineers

PROJECT THE WORLD TRADE CENTER | TITLE PUMP PLATFORM EL.294 TOWER B | DATE 8/7/69

REVISIONS

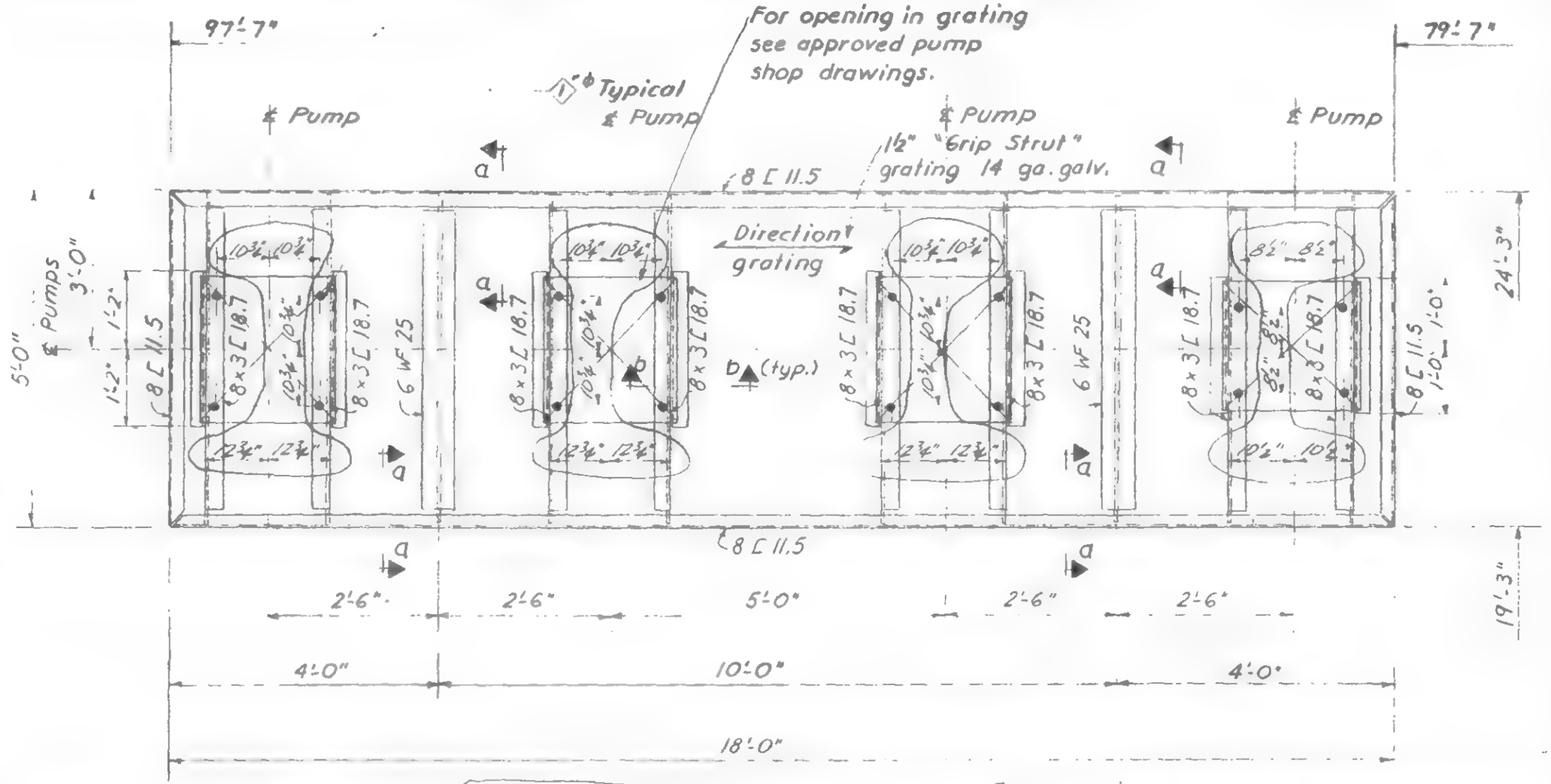


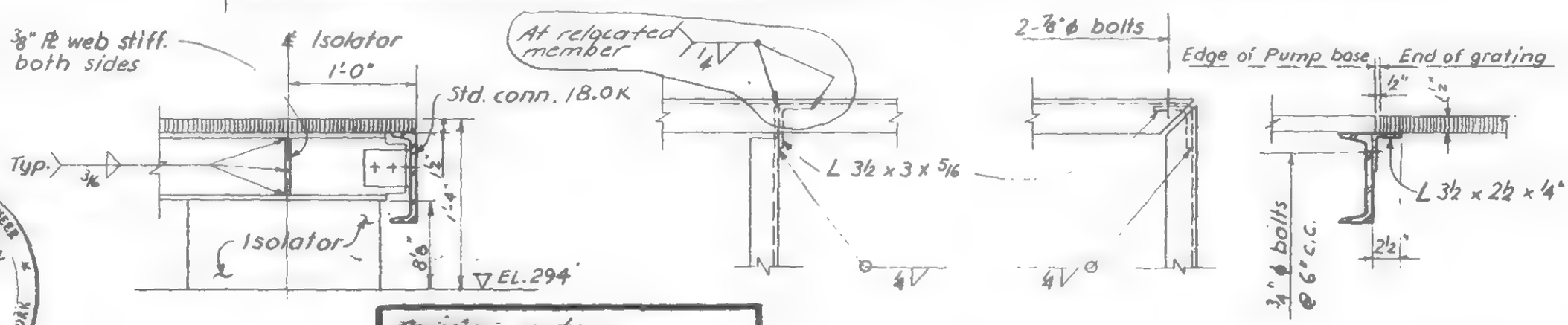


Section a-a

Revision work:
Revised pump bolt locations. Connect relocated members by field welding as shown.

Typical Details

Section b-b

Reference Dwg. 6-18241

19-B-1012

LICENSED PROFESSIONAL ENGINEER LESLIE E. ROBERTSON No. 34360 UNIVERSITY OF THE STATE OF NEW YORK

SKILLING - HELLE - CHRISTIANSEN - ROBERTSON  Structural & Civil Engineers

PROJECT: THE WORLD TRADE CENTER  TITLE: PUMP PLATFORM AT 75TH FLOOR  DATE: 8-7-69

REVISIONS: 8/29/69

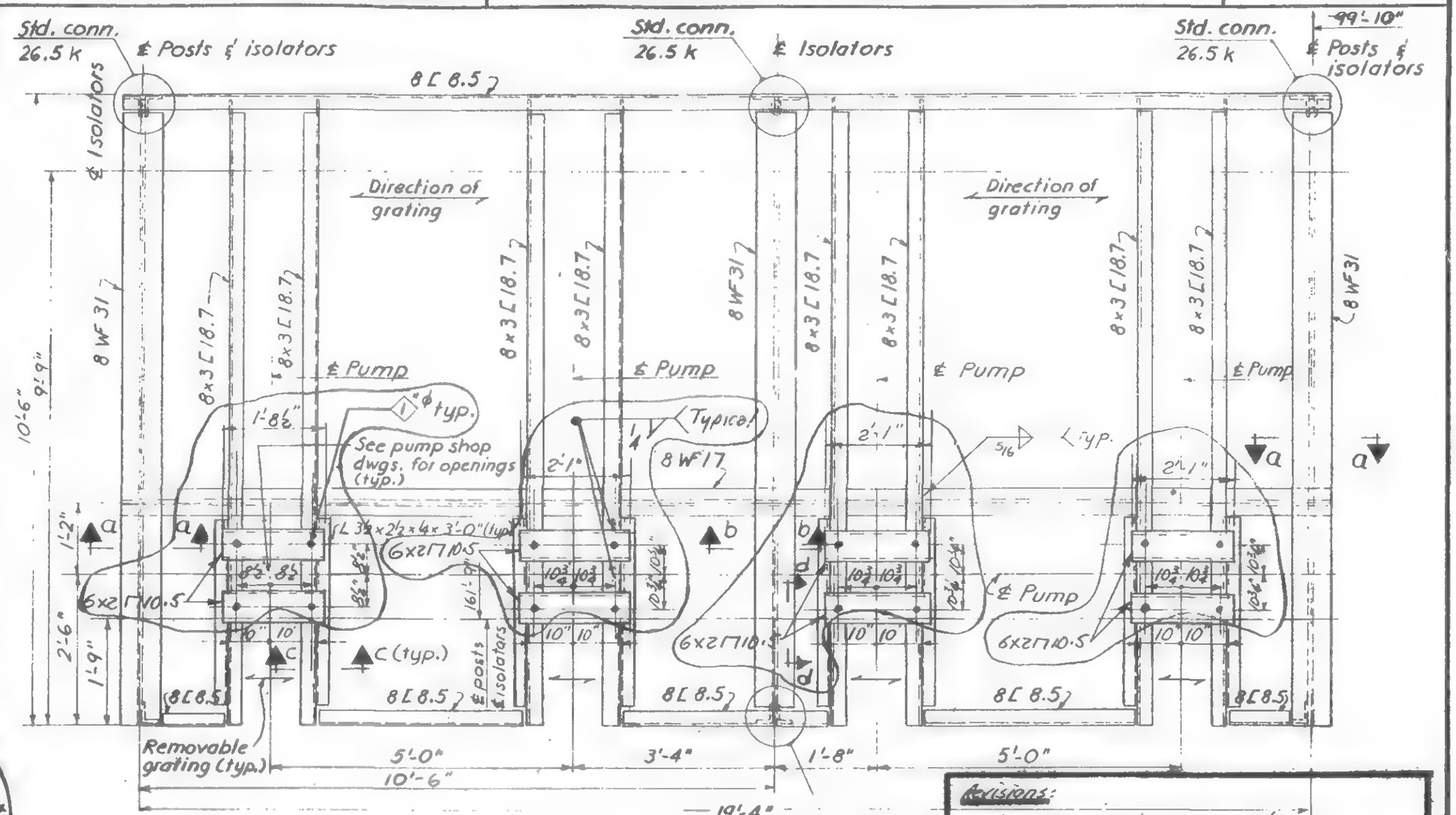


Revisions:
Add 6×2 [ 's @ pump base locations. Revisions included herein are circled

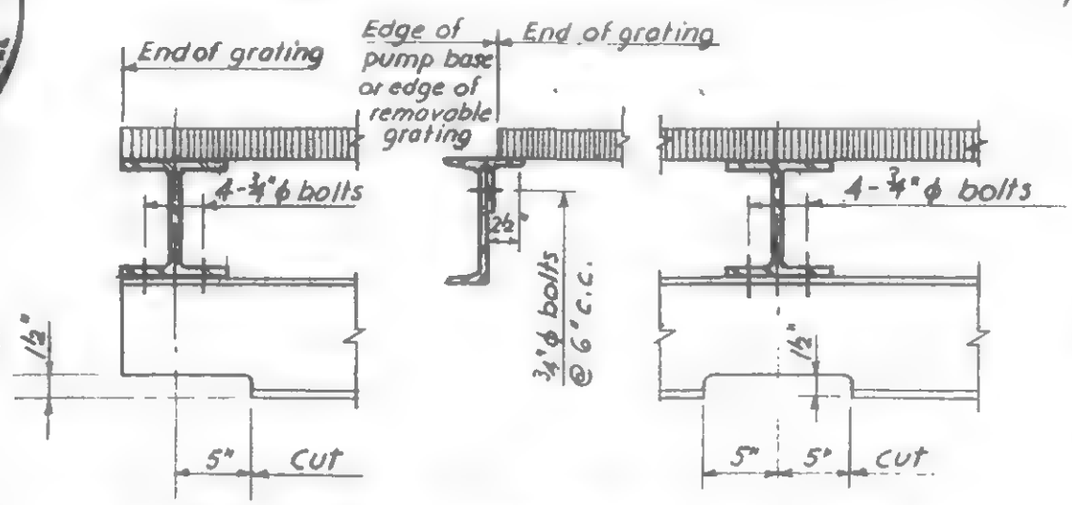


Section a-a  Section c-c  Section b-b

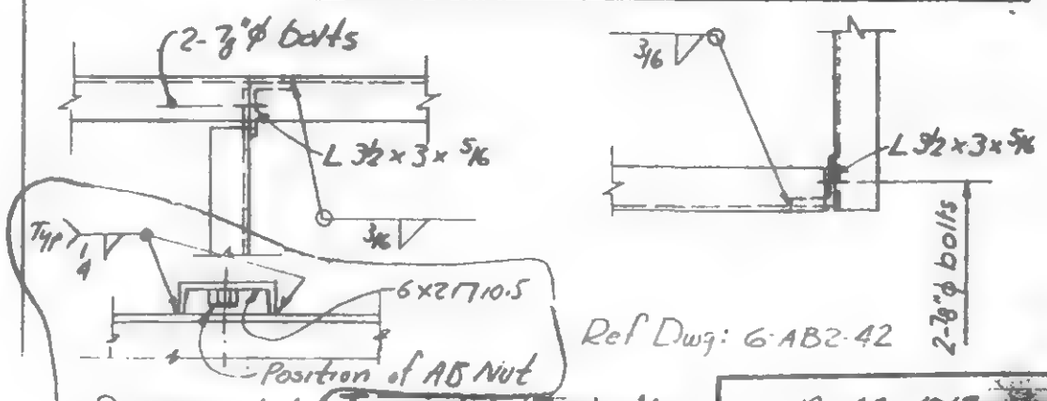


Ref Dwg: 6-AB2-42

Section dd  Typical Details

19-AB-1013

LICENSED PROFESSIONAL ENGINEER LESLIE E. ROBERTSON No. 34360 UNIVERSITY OF THE STATE OF NEW YORK

SKILLING, HELLE, CHRISTIANSEN, ROBERTSON — Structural & Civil Engineers

PROJECT: THE WORLD TRADE CENTER | TITLE: REVISION AFTER FABRICATION - TRUSS BRACES | DATE: 8/18/69

REVISIONS

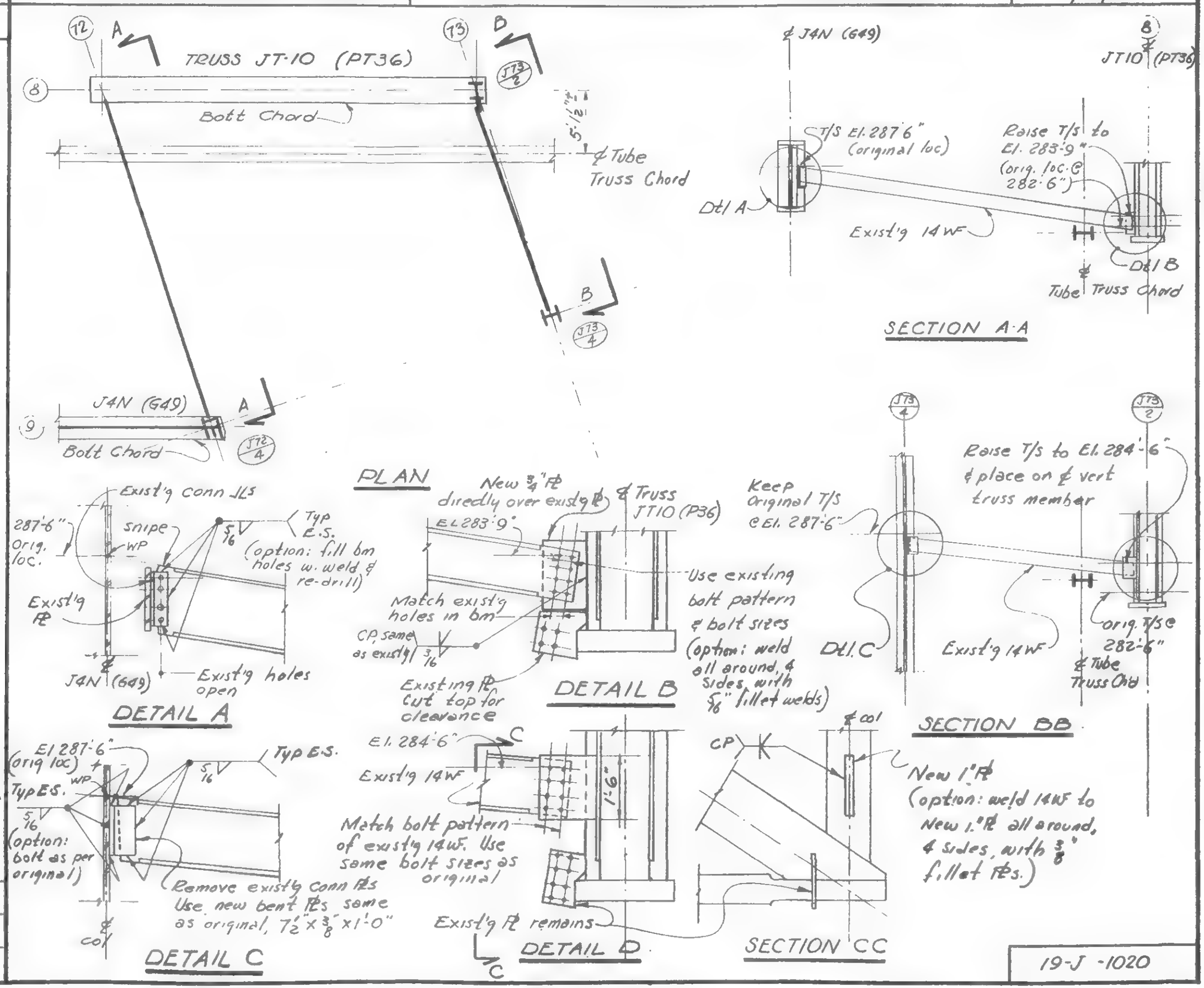


DESIGNED: R. Bonnett
DRAWN: WB
REVIEWED

19-J-1020

SKILLING, HELLE, CHRISTIANSEN, ROBERTSON — Structural & Civil Engineers

PROJECT: THE WORLD TRADE CENTER | TITLE: STRENGTHENING OF BEAM TO GIRDER CONNECTION | DATE: 10-17-69

REVISIONS

Due to widening of work-platform to 52'-0" ——— North of Tower 'B'

(Change No. 503.100)

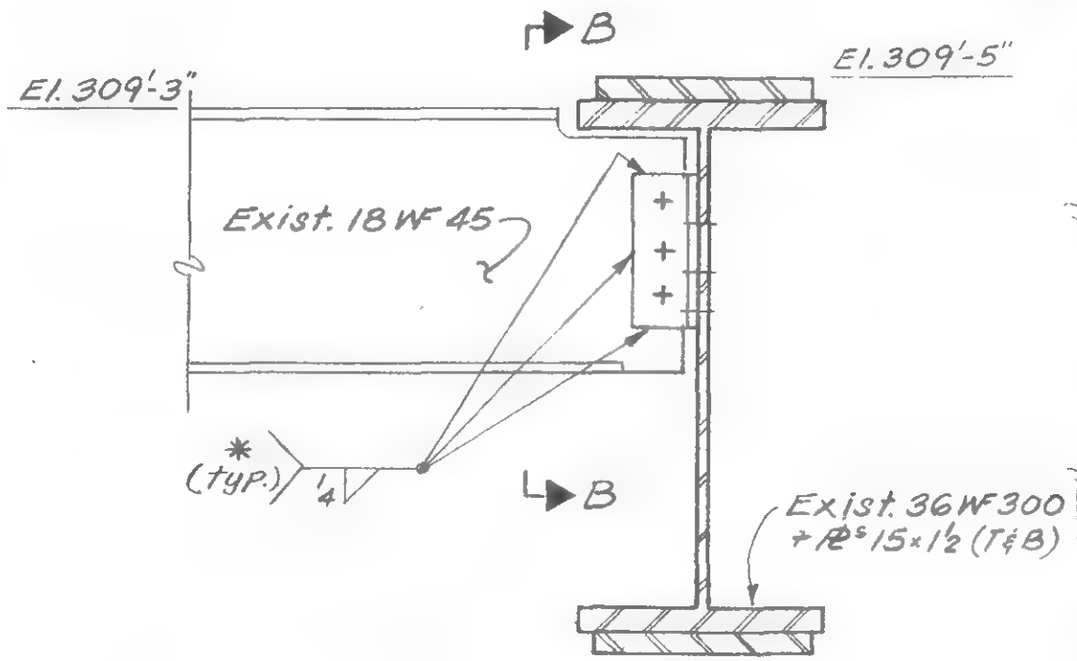


Section A-A

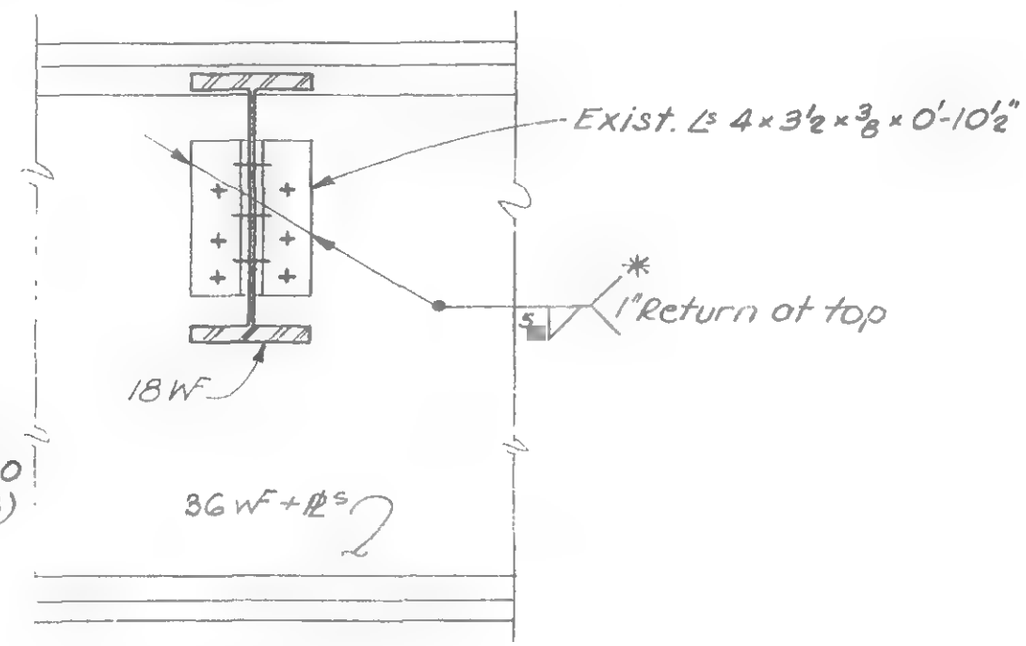


Section B-B

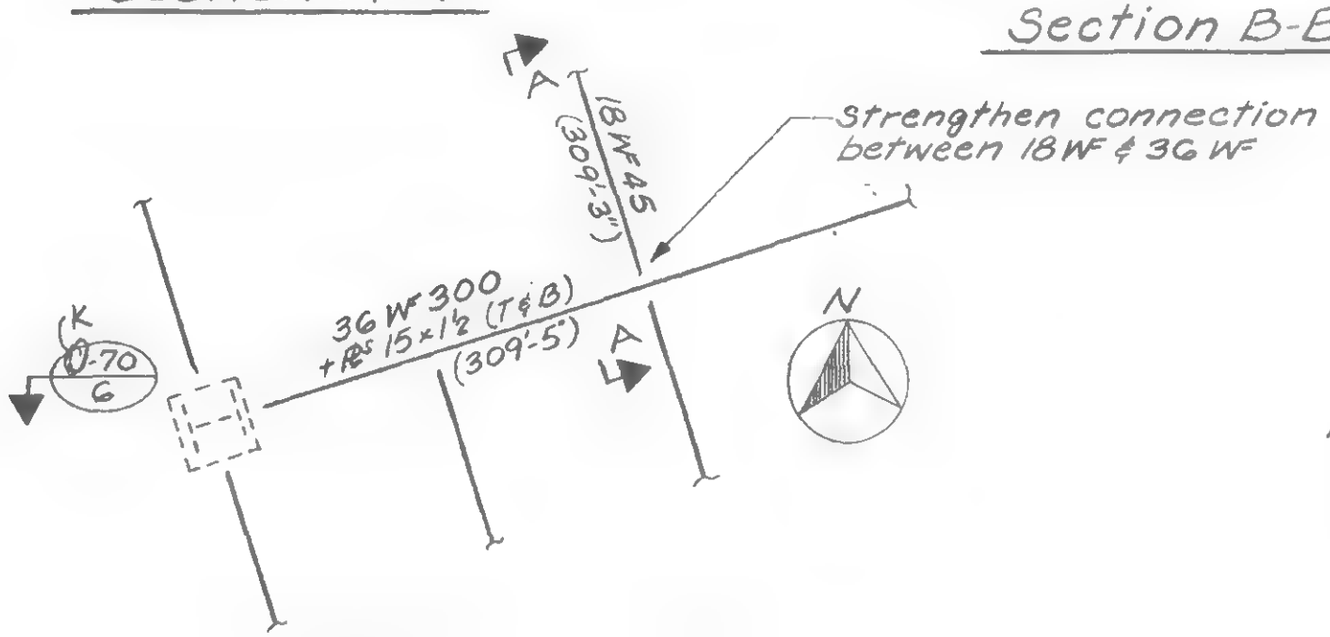


PART PLAN AT EL. 310

Notes:

1. * — added welding
2. All welds to be E70xx

LICENSED PROFESSIONAL ENGINEER — LESLIE E. ROBERTSON — No. 34360 — UNIVERSITY OF THE STATE OF NEW YORK

DESIGNED

DRAWN S.C.

REVIEWED E.L.

19-K-1025

SKILLING, HELLE, CHRISTIANSEN, ROBERTSON — Structural & Civil Engineers

PROJECT: THE WORLD TRADE CENTER

TITLE: MODIFICATION OF HANGER IN SOUTH PROJ. TO CLEAR EXISTING PATH TRACK (WTC-250.00)

DATE: 11-11-69

REVISIONS

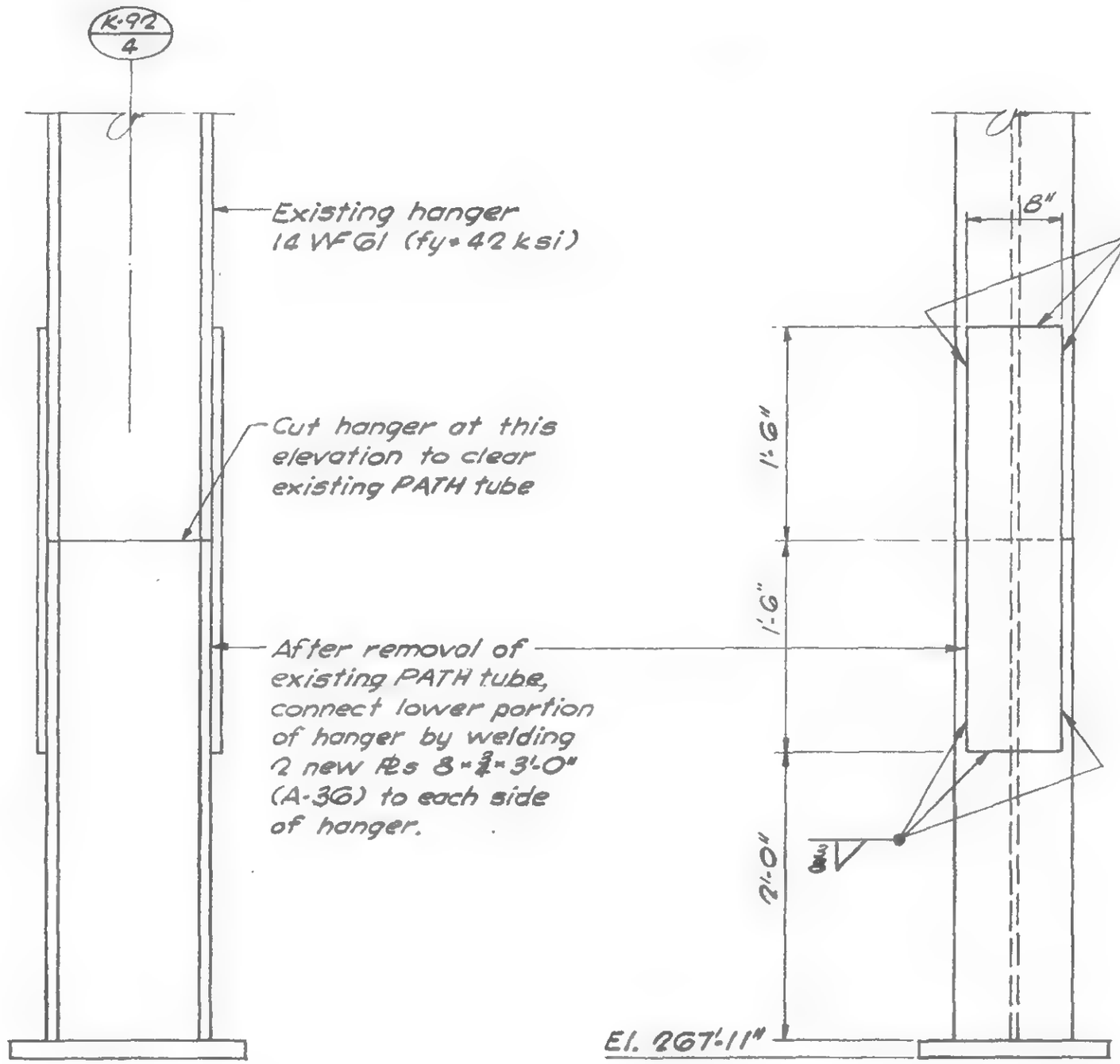


NOTES:

1. All welds to be E70XX

LICENSED PROFESSIONAL ENGINEER — LESLIE E. ROBERTSON — No. 34960 — UNIVERSITY OF THE STATE OF NEW YORK

DESIGNED

DRAWN G.K.

REVIEWED E.L.

19-K-1026

SKILLING, HELLE, CHRISTIANSEN, ROBERTSON — Structural & Civil Engineers

PROJECT: THE WORLD TRADE CENTER

TITLE: CUT OPENINGS IN PL GIRDER J2A & J2F (CHANGE No 435.029) (REF. JBB DWG. SK-M-J-97 8-21-69)

DATE: 11-24-69

REVISIONS

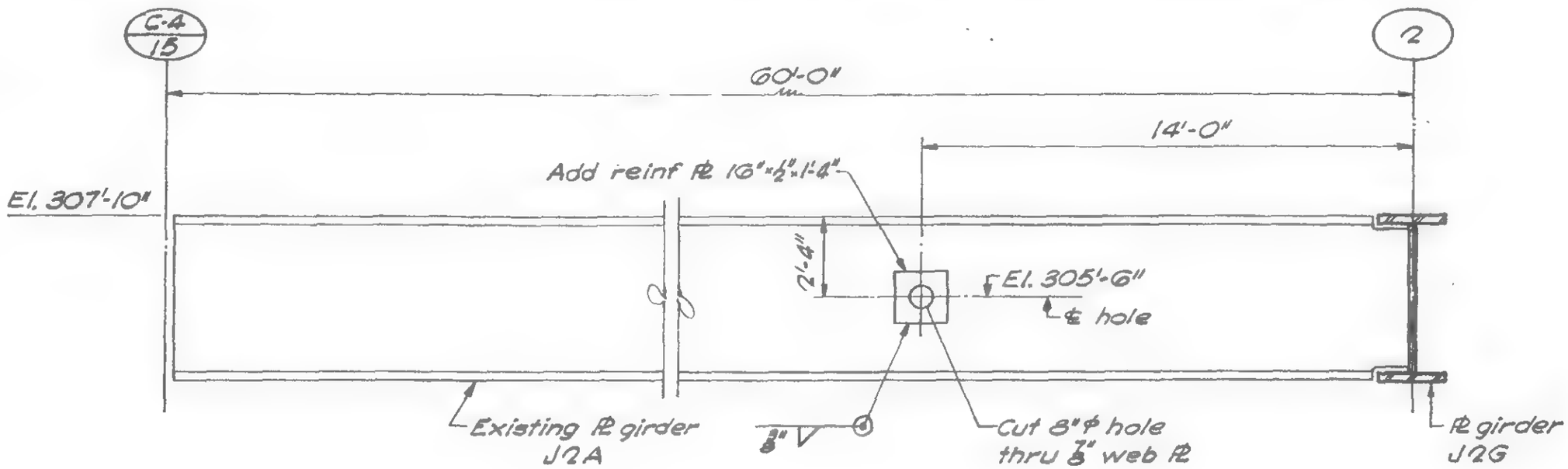


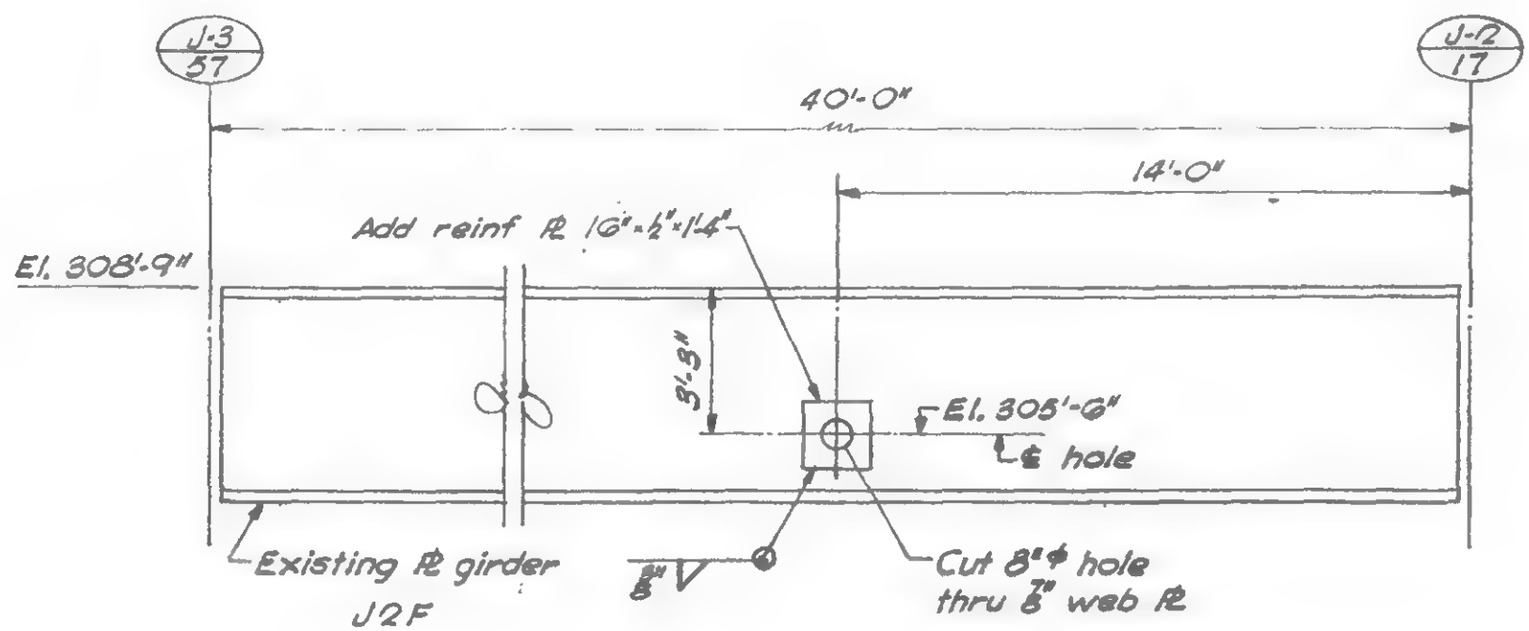


LICENSED PROFESSIONAL ENGINEER — LESLIE E. ROBERTSON — No. 34360 — UNIVERSITY OF THE STATE OF NEW YORK

DESIGNED

DRAWN: G.K.

REVIEWED: E.L.

19-J-1027

SKILLING, HELLE, CHRISTIANSEN, ROBERTSON — Structural & Civil Engineers

PROJECT: THE WORLD TRADE CENTER | TITLE: KITCHEN ELEVATOR FRAMING | DATE: 12-3-69

REVISIONS

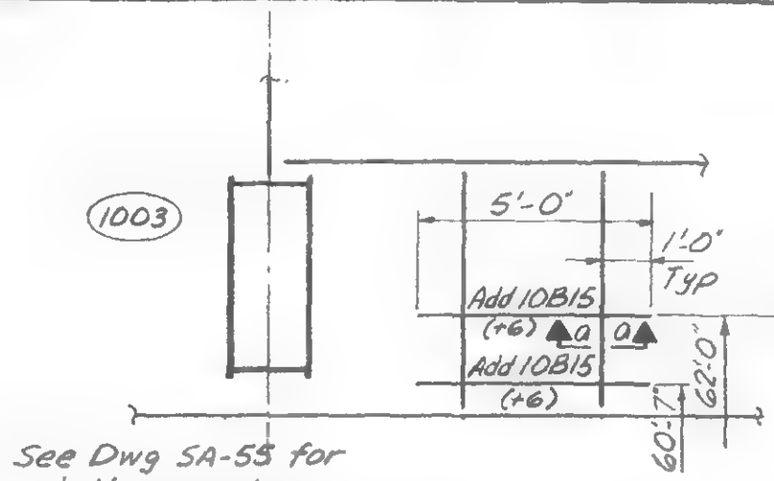


See Dwg SA-55 for existing members

FRAMING PLAN - FLOOR 47

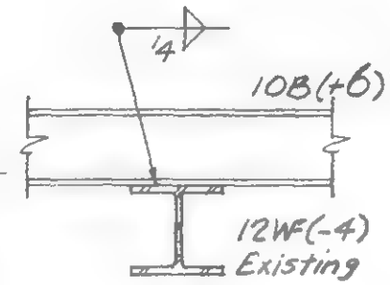


Section a-a
typ. 4 locations

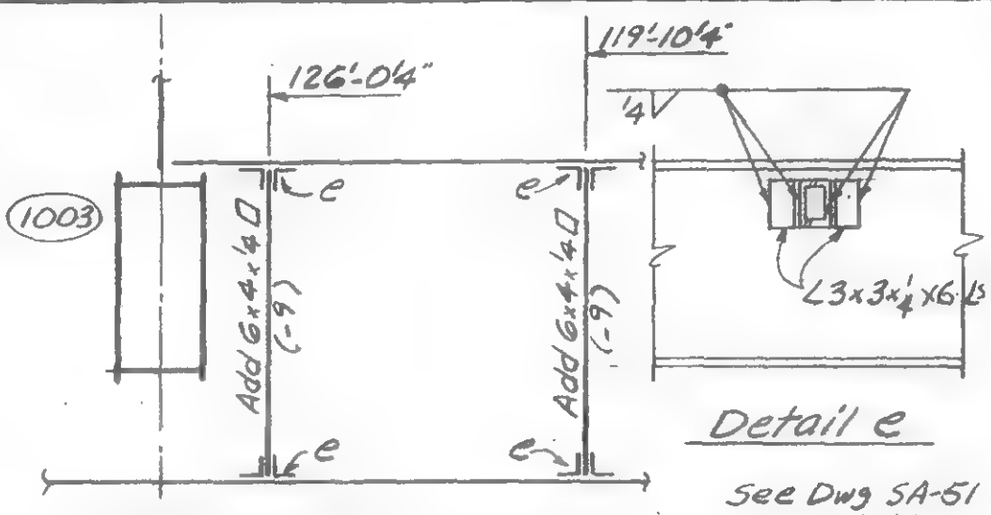


Detail e

See Dwg SA-51 for existing members

FRAMING PLAN-FLOOR 43

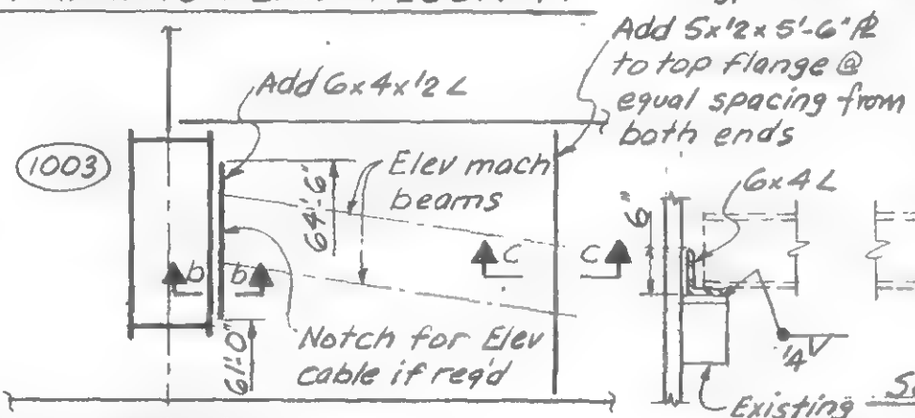


See Dwg SA-54 for existing members

FRAMING PLAN-FLOOR 46




Section b-b

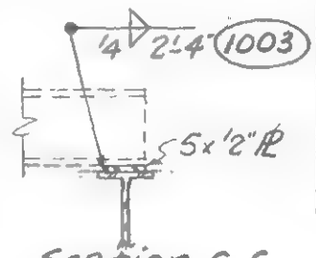


Section c-c

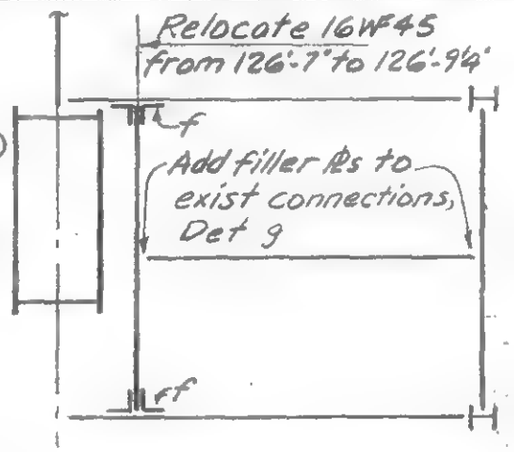


FRAMING PLAN-FLOOR 43(-4'-0")

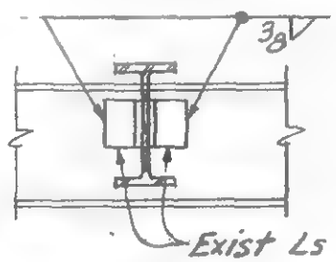


Detail f

See Dwg SA-51 for existing members

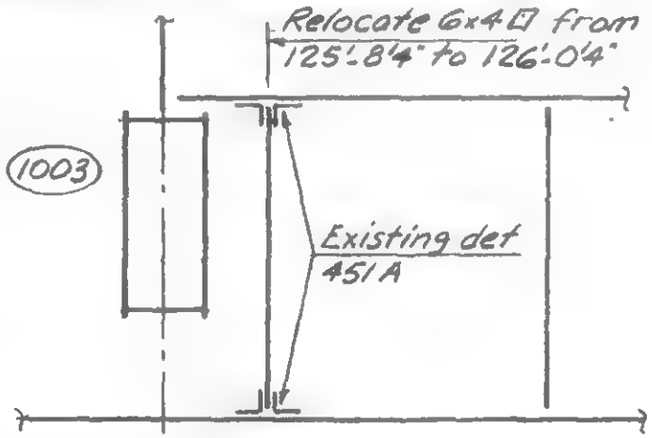


See Dwgs SA-52 & SA-53 for existing members

FRAMING PLAN-FLOORS 44 & 45

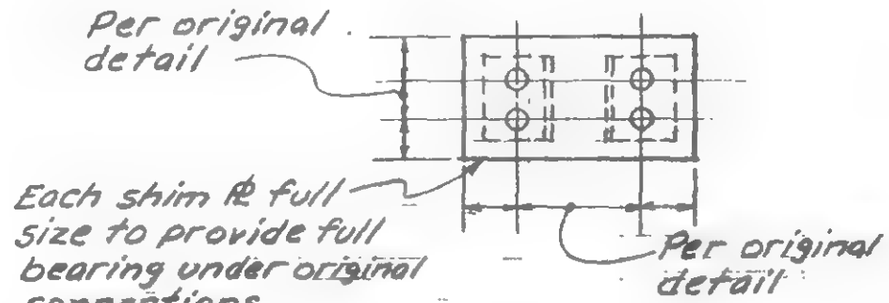


Detail g

Notes:
Members not identified are existing members shown in referenced drawings

VOID

LICENSED PROFESSIONAL ENGINEER — LESLIE E. ROBERTSON — No. 34360 — UNIVERSITY OF THE STATE OF NEW YORK

SIGNED: LER

DRAWN: A. FRANQUI

REVIEWED

19-A-1030

SKILLING, HELLE, CHRISTIANSEN, ROBERTSON — Structural & Civil Engineers

PROJECT: THE WORLD TRADE CENTER

TITLE: SUPP'TS FOR EXIST. TELEPHONE CONDUITS—N. & S. PROJ'S

DATE: 3-3-70

REVISIONS

16-70 R GEN REV.

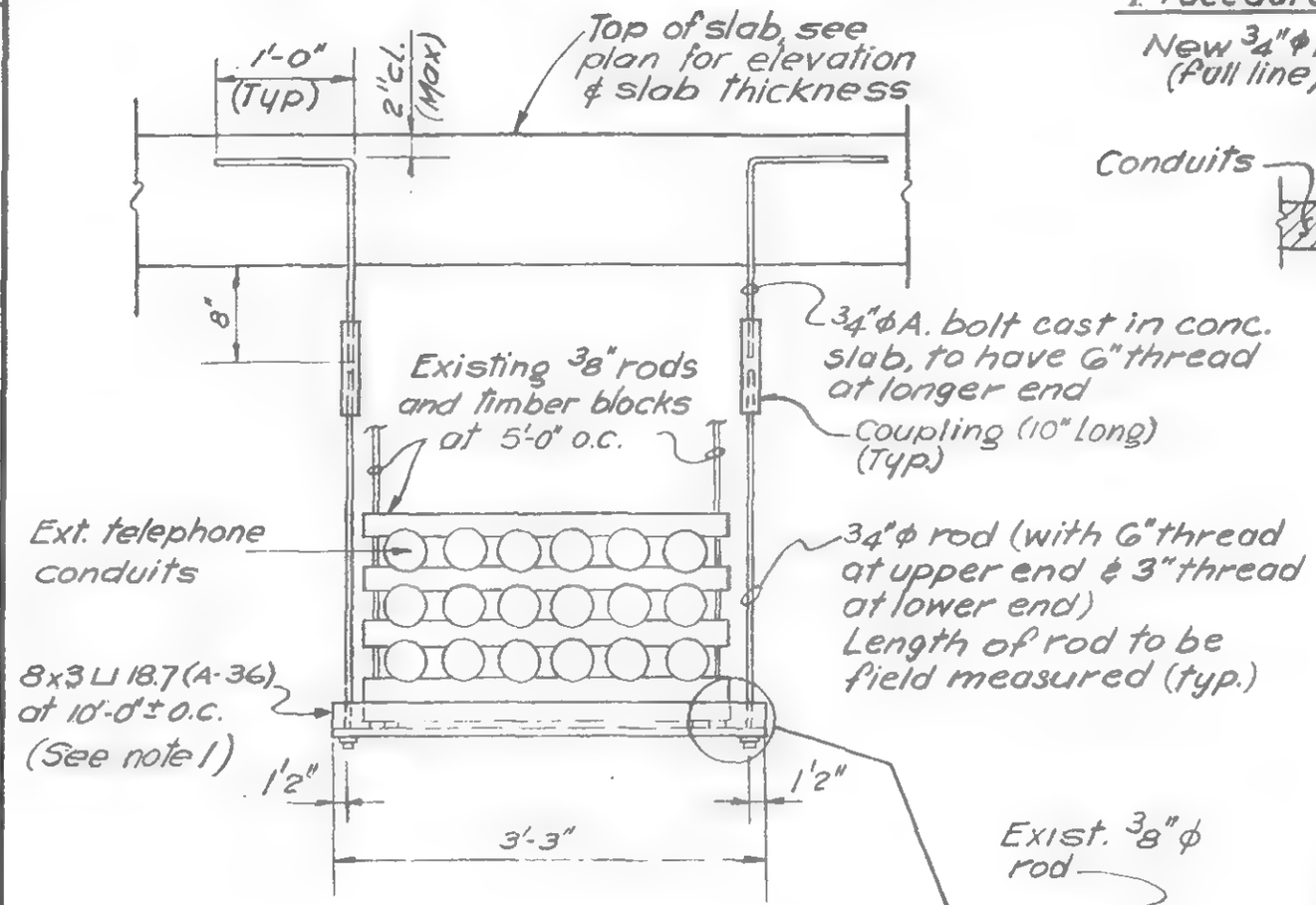


## Procedure of installation

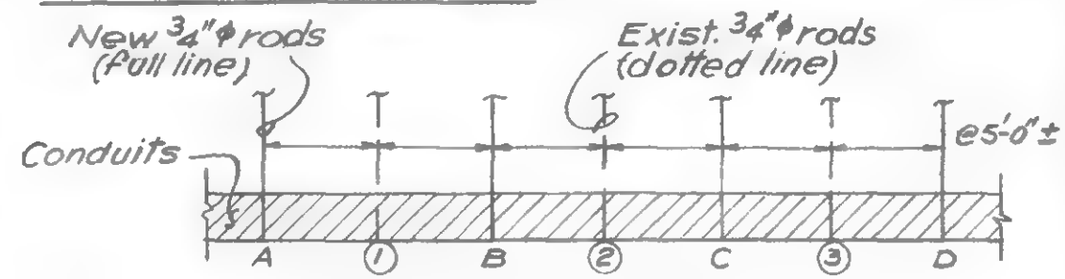


1.- Provide two new ⊔s for each Projection
2.- Install new ⊔s at point 'A' & 'B', one on each side of 1
3.- Remove existing ⊔ from point 1 and place it at 'C' with new rods.
4.- Then, remove existing ⊔ from point 2 and place it at 'D' with new rods.
5.- Repeat procedure until completion.

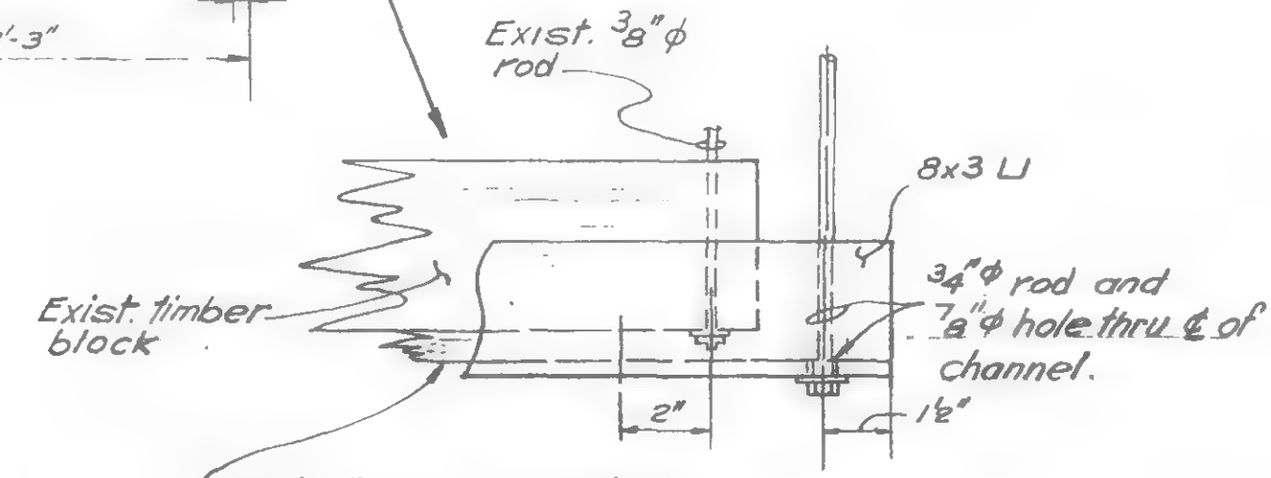


Add 3" wide creosoted oak plank. Thickness as reqd. to miss the nuts under existing. 3/8"ϕ rods (nail plank to block)

VOID (PER E. LIV)

LICENSED PROFESSIONAL ENGINEER — LESLIE E. ROBERTSON — No. 34360 — UNIVERSITY OF THE STATE OF NEW YORK

DESIGNED

DRAWN: V.H.A

REVIEWED: E.L.

19-K-1031

SKILLING, HELLE, CHRISTIANSEN, ROBERTSON — Structural & Civil Engineers

PROJECT: THE WORLD TRADE CENTER | TITLE: OPNG. THRU BEAMS BTW. COLS. K39-4 & K39-6 (El. 332') | DATE: 6-23-70

REVISIONS

(Per Change No. 405.037)
Supplement No. 1

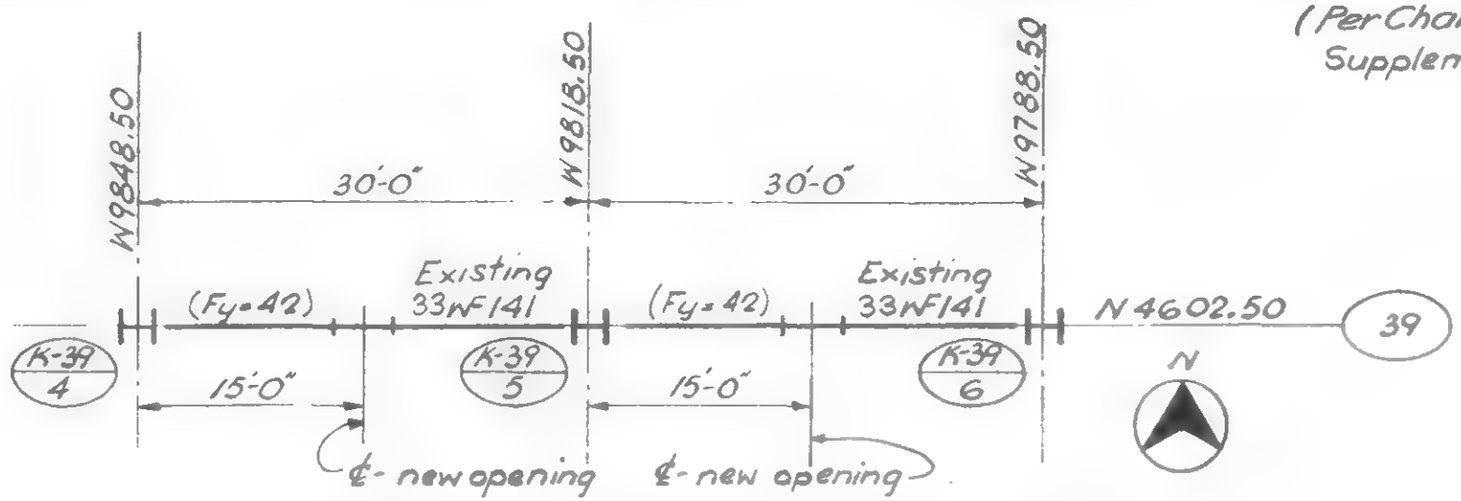


Port Plan at El. 332' (Zone K-2)
(North of Tower "B")

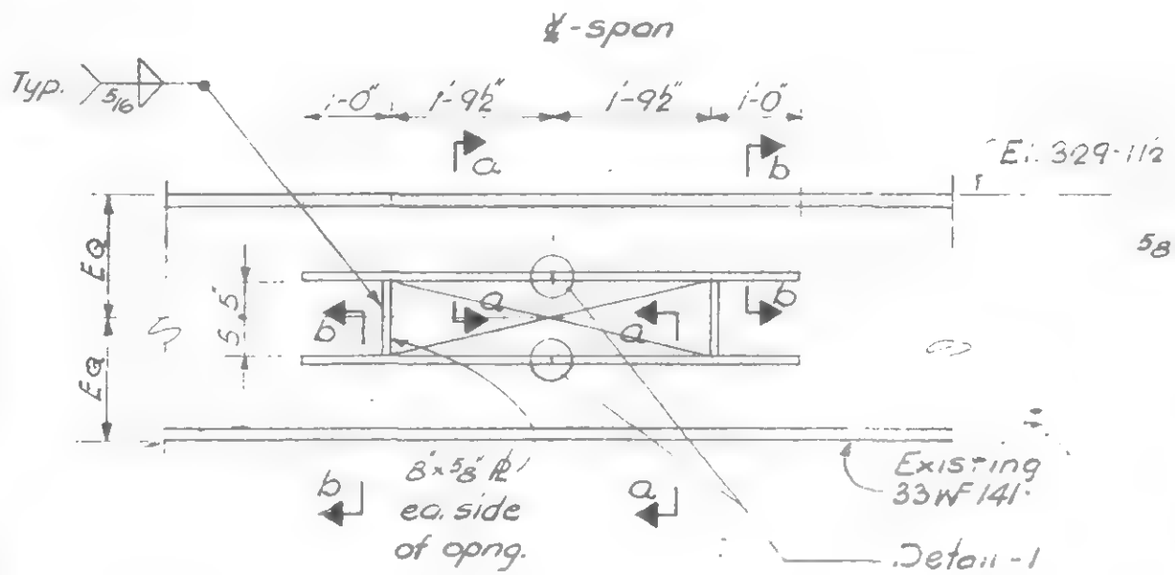


Elevation of Beam

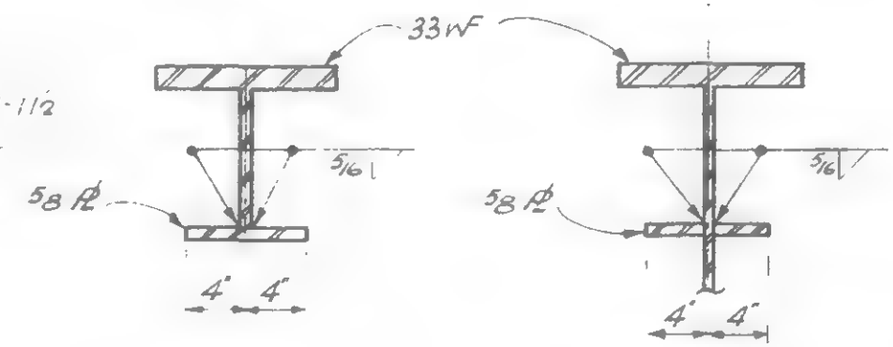


Section a-a

Section b-b

Notes:-
1. All PLs to be A-36 steel
2. All electrodes to be E 70xx

Detail-1

LICENSED PROFESSIONAL ENGINEER — LESLIE E. ROBERTSON — No 34360 — UNIVERSITY OF THE STATE OF NEW YORK

DESIGNED

DRAWN D. Huggins

REVIEWED E.L.

19-K-1035

SKILLING, HELLE, CHRISTIANSEN, ROBERTSON — Structural & Civil Engineers

PROJECT: THE WORLD TRADE CENTER | TITLE: TEMPORARY SUPPORT SYSTEM TO SUPPORT CONC POUR @ EL 294 | DATE: 8-25-70

REVISIONS

(Per letter TRCC to SHCR on 8-12-70)

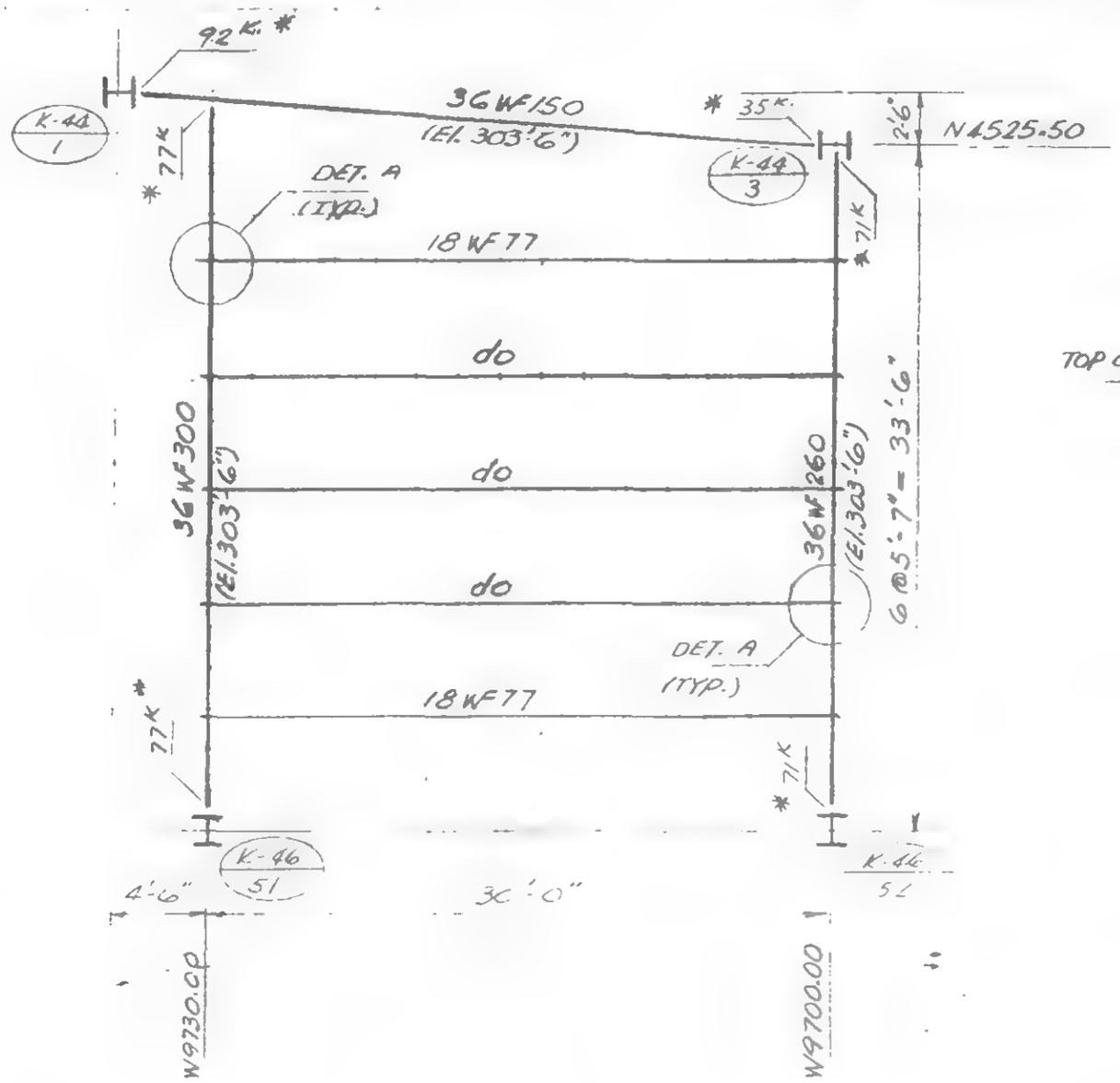


PLAN

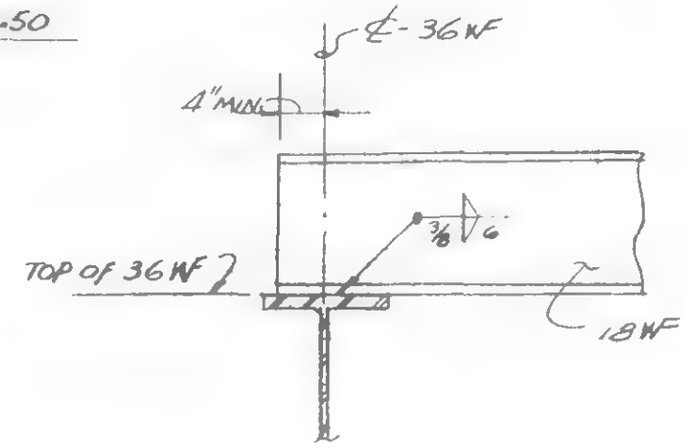


DETAIL - A

Notes:

1. All steel members shown to be A-36.
2. All electrodes to be E70xx.
3. *—field connection in accordance with AISC manual of steel construction, table VI
4. Field measure all dimensions between existing columns (K44-1, K44-3, K46-51 & K46-52)
5. Steel framing as shown and all the attached formwork shall not be removed until after completion of all concrete work at El. 294 between Tower 'B' and east slurry wall after the removal of existing PATH tube.

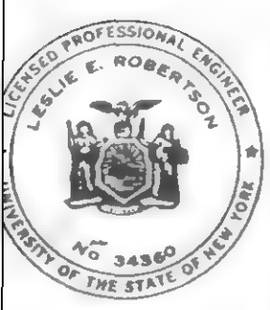


SIGNED

DRAWN S.C.

REVIEWED E.L.

19-K-1036

SKILLING, HELLE, CHRISTIANSEN, ROBERTSON — Structural & Civil Engineers

PROJECT: THE WORLD TRADE CENTER | TITLE: DET. OF NEW HANGER & REPAIR OF EXIST. BEAM CONN. (EL. 310 ZONE J-4) | DATE: 10-1-70

REVISIONS

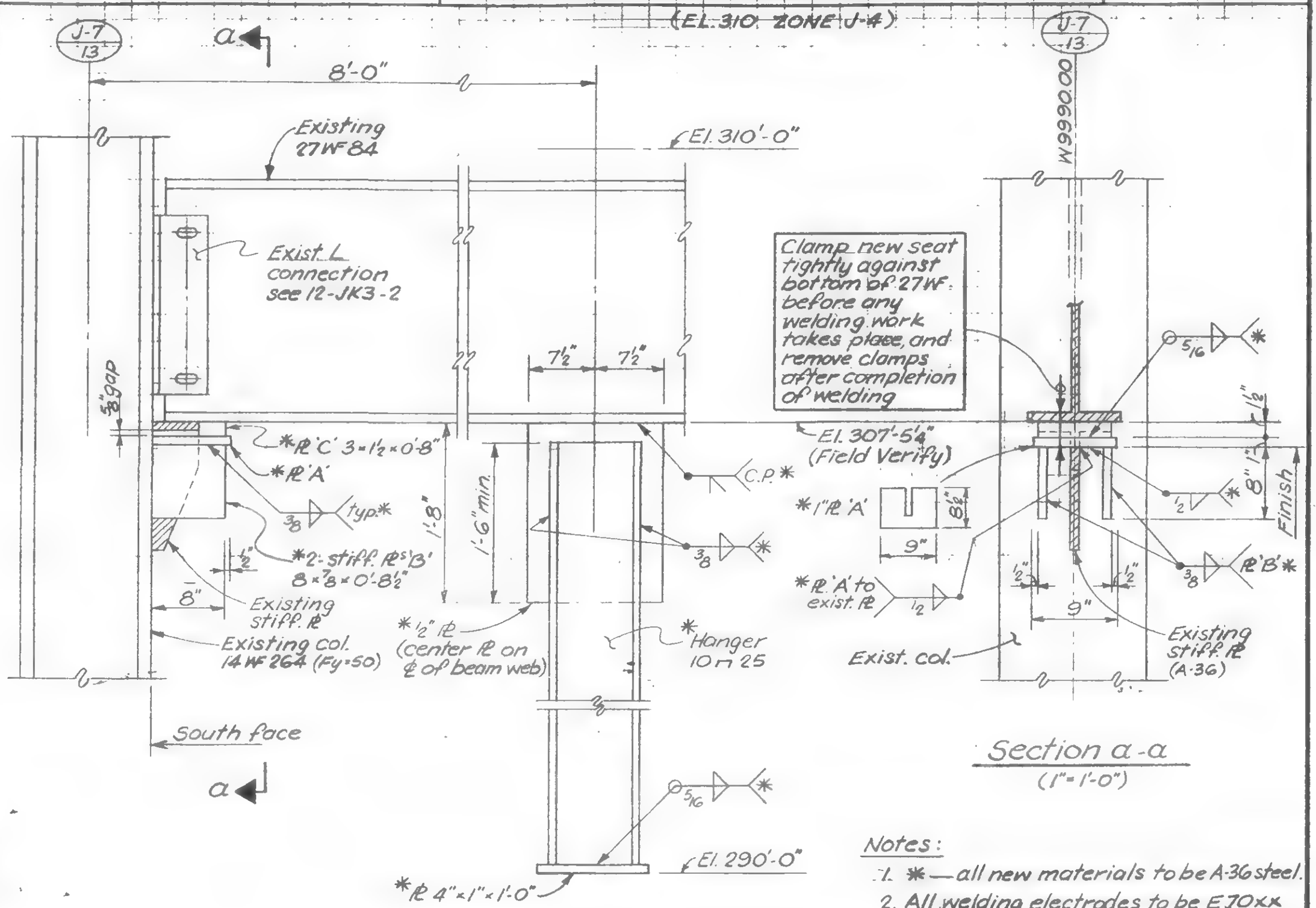


ELEVATION
(Looking east)
(1"=1'-0")

Section a-a
(1"=1'-0")

Notes:

1. * — all new materials to be A-36 steel.
2. All welding electrodes to be E70xx low hydrogen.
3. Hanger & ½" PL to be removed at the direction of the Engineer.
4. Entire seat connection to be removed as described on 12-JK3-2

DESIGNED

DRAWN S.C.

REVIEWED E.L.

19-J-1037

SKILLING, HELLE, CHRISTIANSEN, ROBERTSON — Structural & Civil Engineers

| PROJECT | TITLE | DATE |
|---|---|---|
| THE WORLD TRADE CENTER | REMOVE BEAMS OVER RAMP 'H' — EL.310' (ZONE K-5) (CHANGE NO. 433-092) | 12-4-70 |

REVISIONS

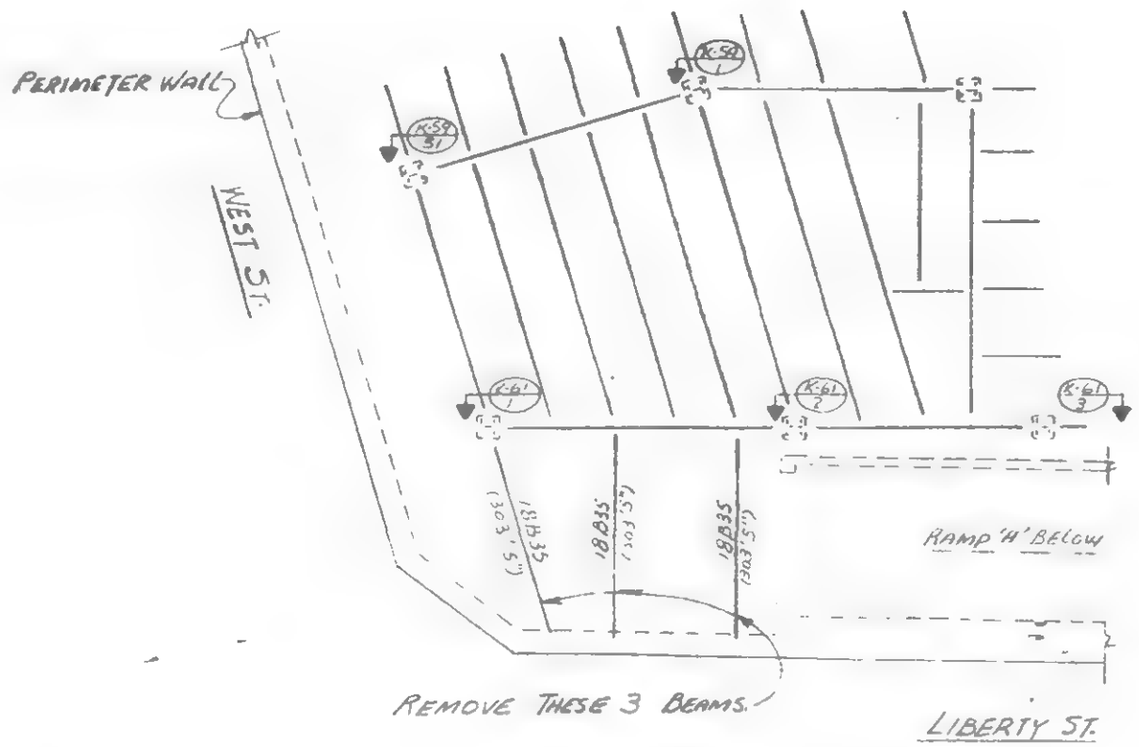


PART PLAN AT EL.310'-0"

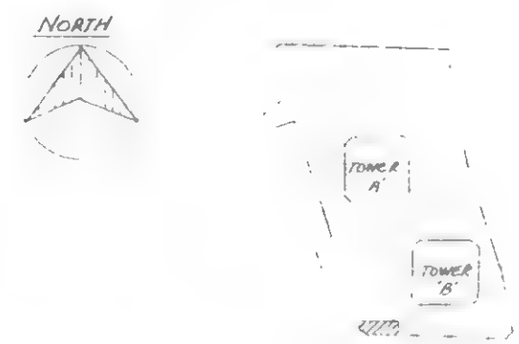


KEY PLAN

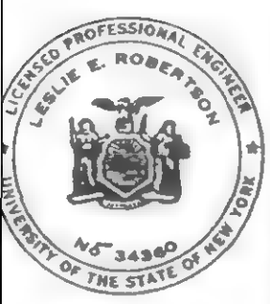


DESIGNED TL

DRAWN ETL

REVIEWED ETL

19-K-1038

SKILLING, HELLE, CHRISTIANSEN, ROBERTSON — Structural & Civil Engineers

PROJECT: THE WORLD TRADE CENTER | TITLE: STEEL BEAM REPAIR AT EL. 310 - ZONE K-5 | DATE: 1-15-71

REVISIONS

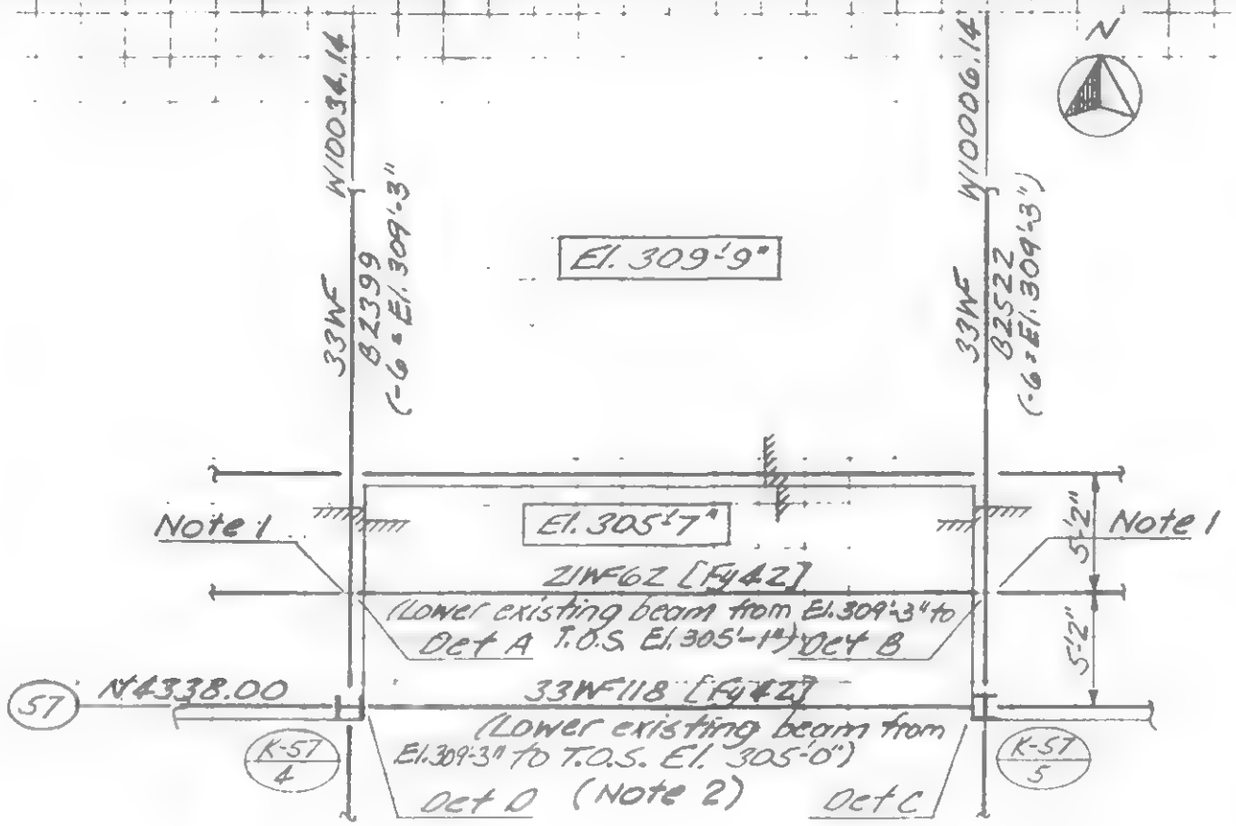


Part Plan at El. 310 - Zone K-5

Notes

1. Before unbolting provide adequate temporary support to these beams and reconnect after beam between has been lowered.
2. Remove exist. connection fittings after beam has been lowered.

LICENSED PROFESSIONAL ENGINEER — LESLIE E. ROBERTSON — No 34360 — UNIVERSITY OF THE STATE OF NEW YORK

R

DNED

DRAWN

REVIEWED

19-K-1039.1

SKILLING, HELLE, CHRISTIANSEN, ROBERTSON — Structural & Civil Engineers

PROJECT: THE WORLD TRADE CENTER | TITLE: STEEL BEAM REPAIR AT EL 310' ZONE K-5 | DATE: 1-15-71

REVISIONS

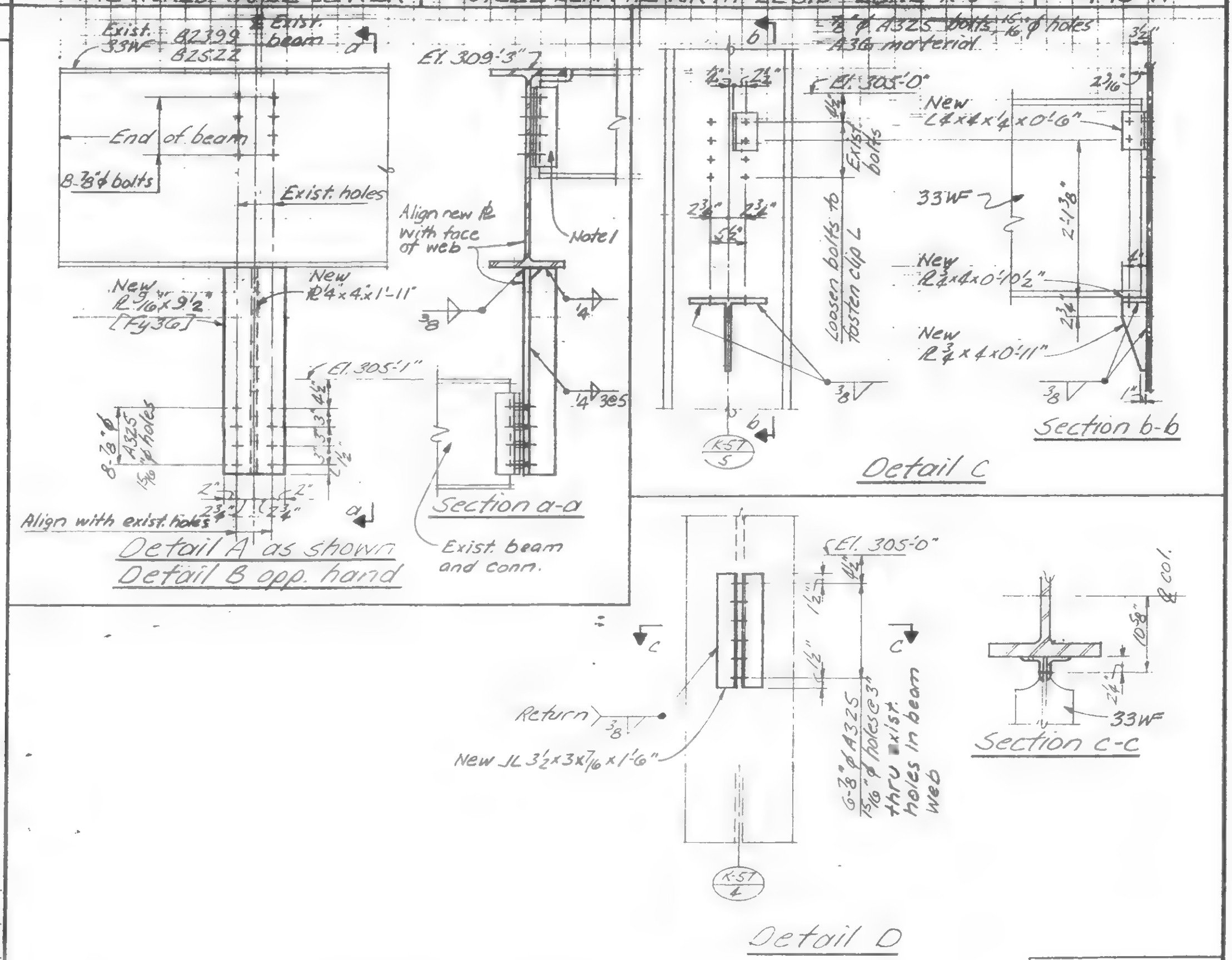


LICENSED PROFESSIONAL ENGINEER — LESLIE E. ROBERTSON — No. 34360 — UNIVERSITY OF THE STATE OF NEW YORK

R

DESIGNED

DRAWN J. Adams

REVIEWED

19-K-1039.2

SKILLING, HELLE, CHRISTIANSEN, ROBERTSON — Structural & Civil Engineers

PROJECT: THE WORLD TRADE CENTER

TITLE: REMOVING OF TEMPORARY GIRDERS AT EXPANSION JOINTS.

DATE: 1-14-71

REVISIONS

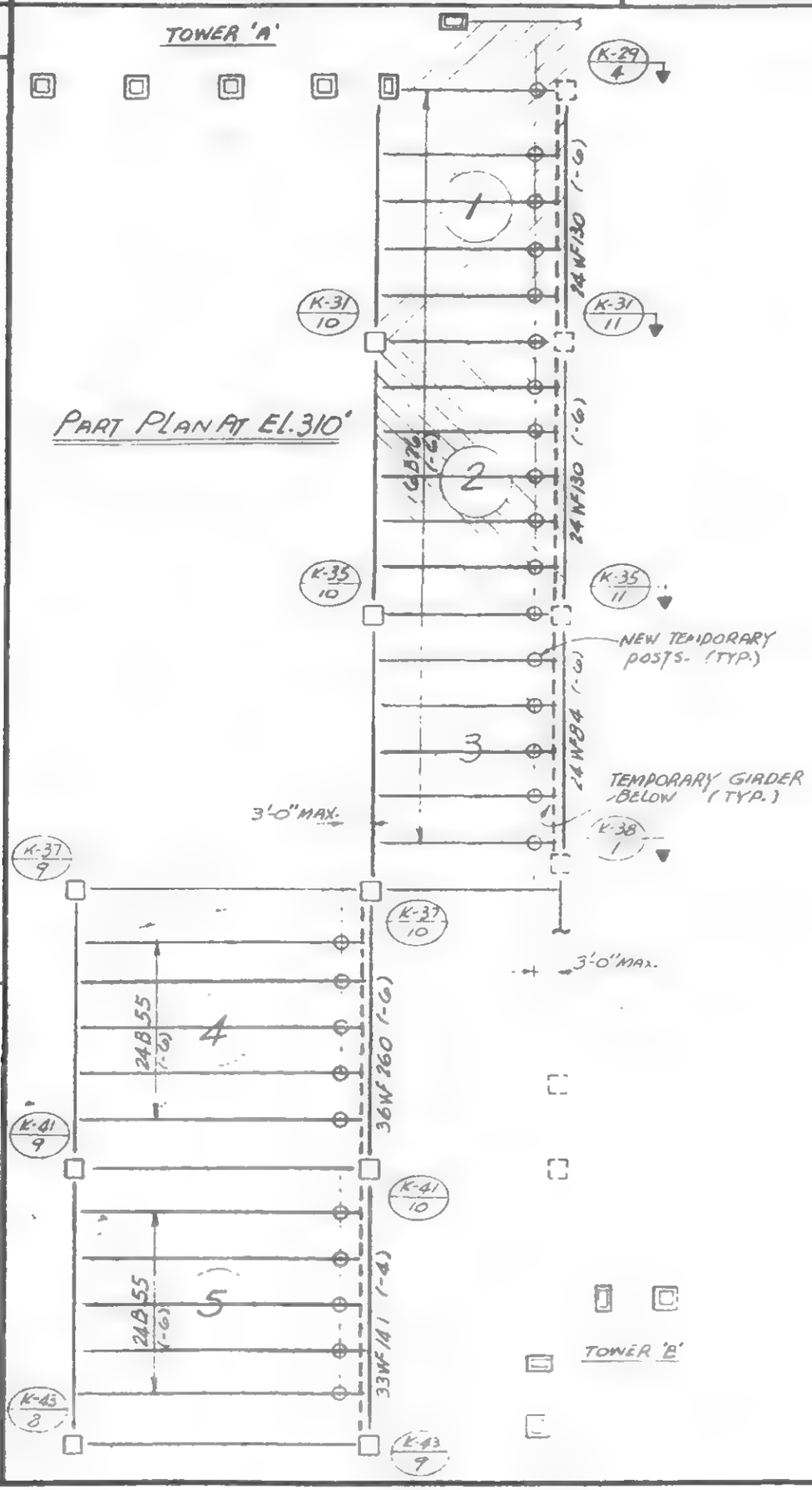


## WORK PROCEDURE

(See also details on 12-JK3-7, 8, 10 and 8-JK5-14.3)

1. Remove "Work Platform" over any one or more of the designated areas (1 thru 5) where temporary girders are planned to be removed. Restrict the same area or areas from any possible traffic movements besides an occasional Live Load of not more than 20 psf. This restriction shall not be lifted until after closing of the expansion joints as described on 8-JK5-14.3 and 12-JK3-7.

2. Shore all beams presently supported by the temporary girder or girders to be removed.

3. Remove temporary girder or girders as shown on 12-JK3-7.

   Follow Detail "B" if an adjacent girder is <u>not</u> planned to be removed. (This applies only to girders along side of 24WF between column K29-4 and K38-1).

4. If required, post under any one of the beams may be removed, provided, an angle seat connection as shown on Detail "a" is furnished.

LICENSED PROFESSIONAL ENGINEER — LESLIE E. ROBERTSON — No. 34360 — UNIVERSITY OF THE STATE OF NEW YORK

SIGNED: L.

DRAWN: E.L.

REVIEWED

19-K-1040.1 of 2

SKILLING, HELLE, CHRISTIANSEN, ROBERTSON — Structural & Civil Engineers

PROJECT: THE WORLD TRADE CENTER

TITLE: REMOVING OF TEMPORARY GIRDERS AT EXPANSION JOINTS

DATE: 1-14-71

REVISIONS

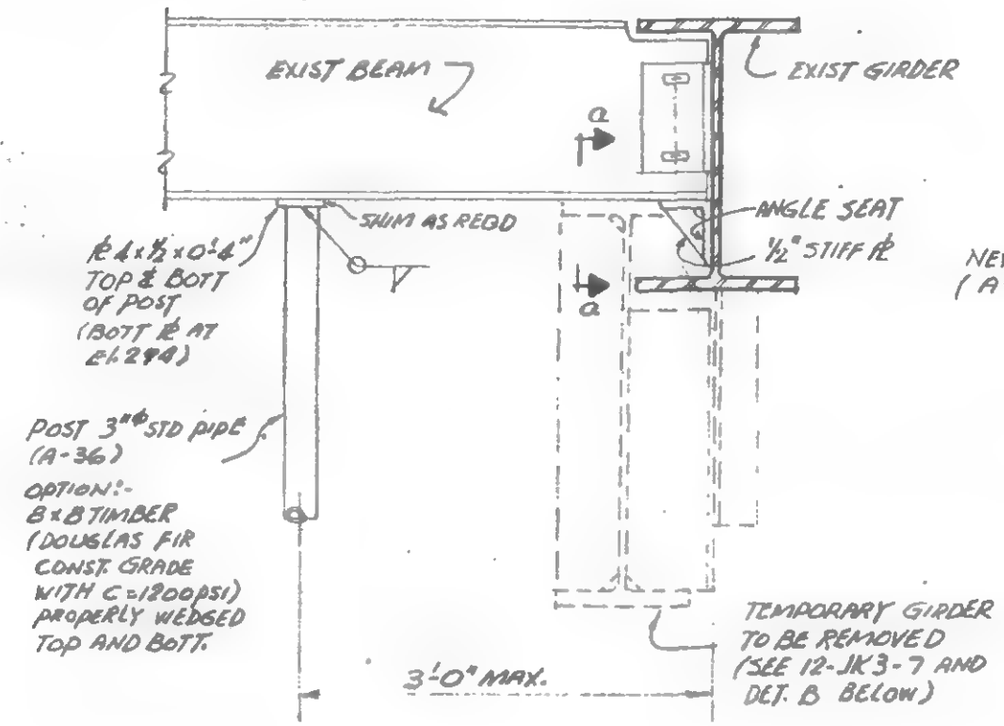


DETAIL 'A'

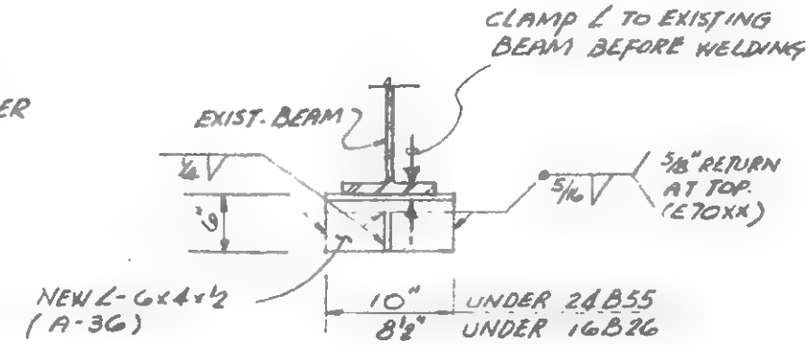


SECTION a-a

(SAME DETAIL AT COLUMN LINE)

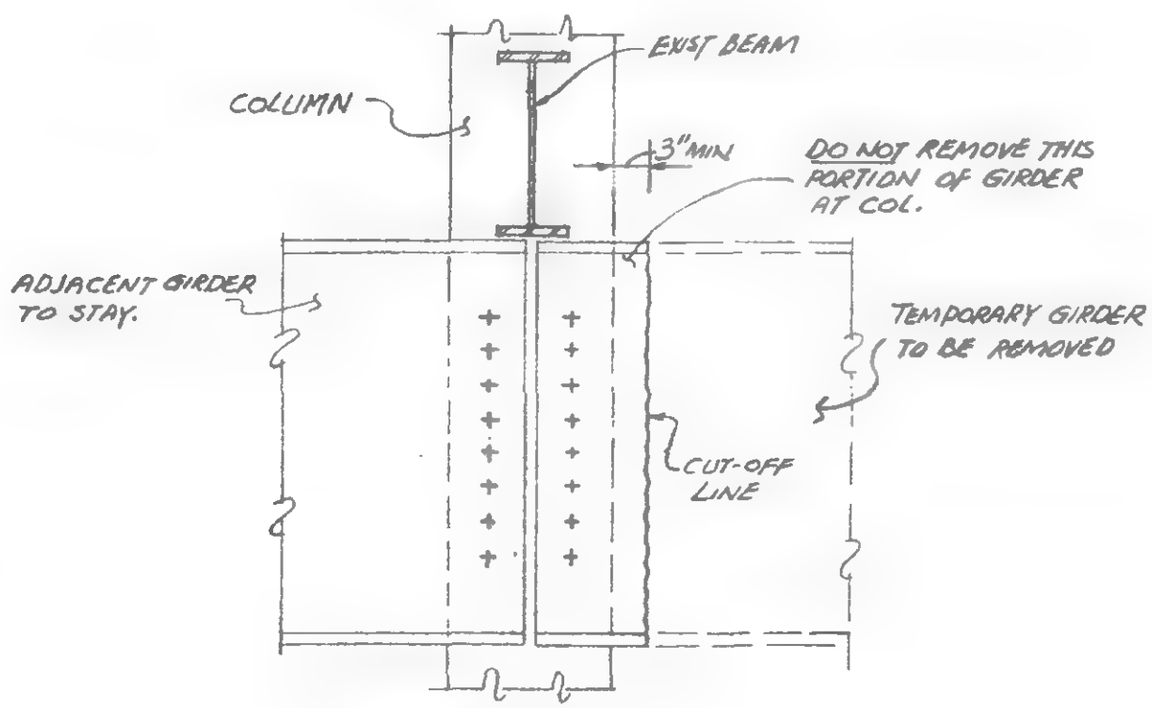


DETAIL 'B'

LICENSED PROFESSIONAL ENGINEER LESLIE E. ROBERTSON No. 34580 UNIVERSITY OF THE STATE OF NEW YORK

VERIFIED J.L.

DRAWN E.L.

REVIEWED

19-K-1040.2 of 2

THE WORLD TRADE CO.

REVISIONS

7/26/71

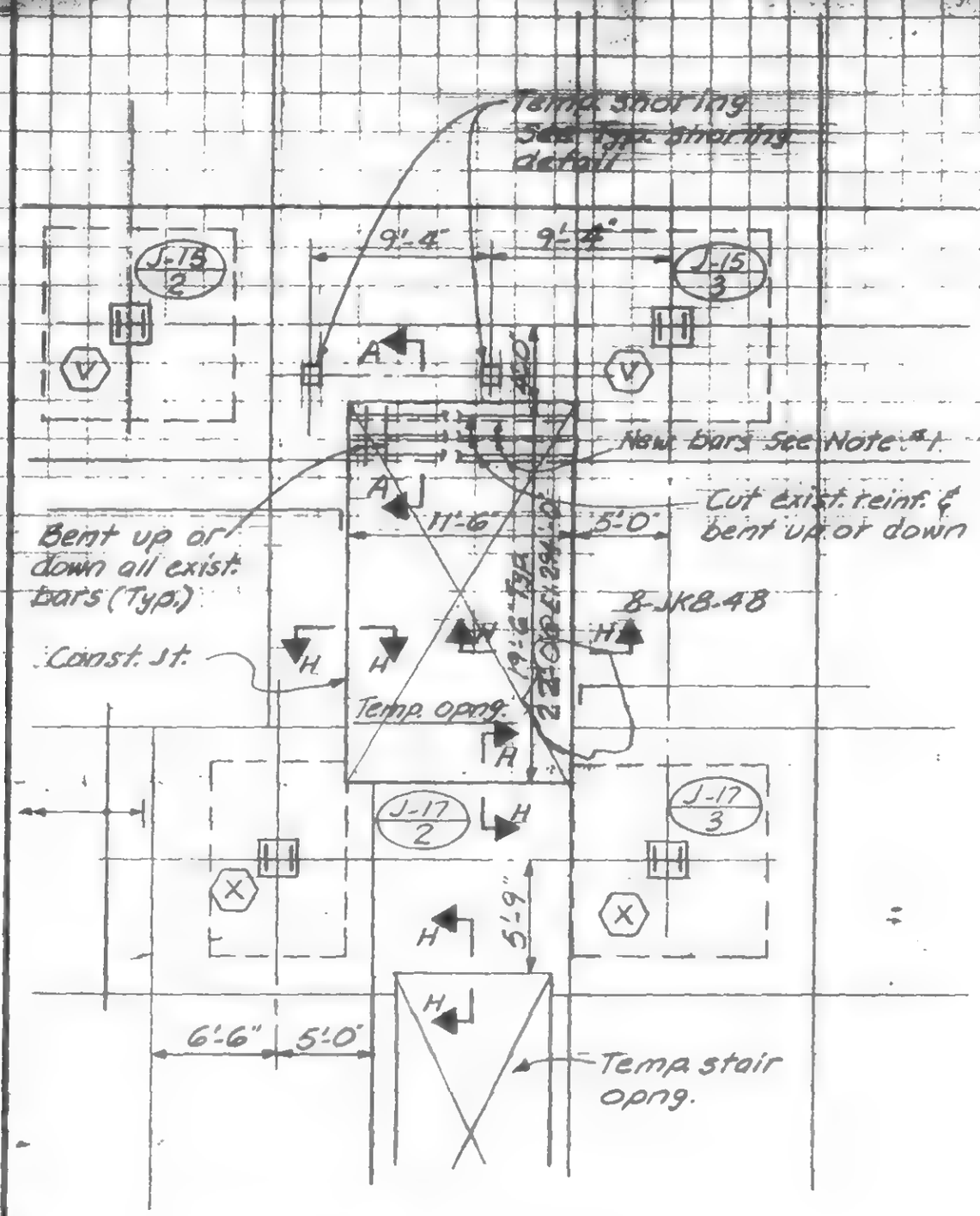


Part Plan

El. 294, 284, 274, 264 & 253

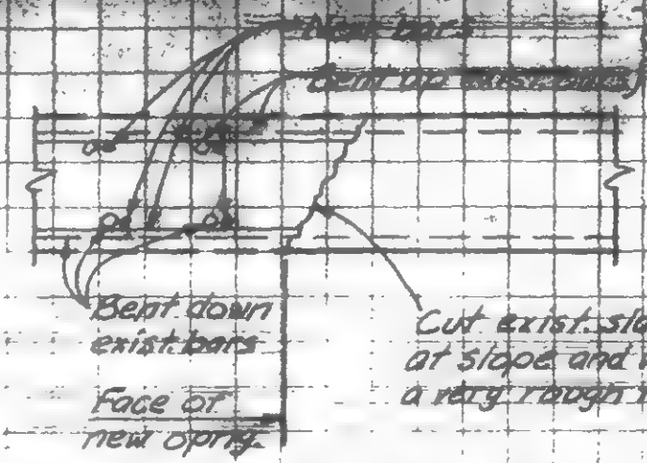


Section A-A

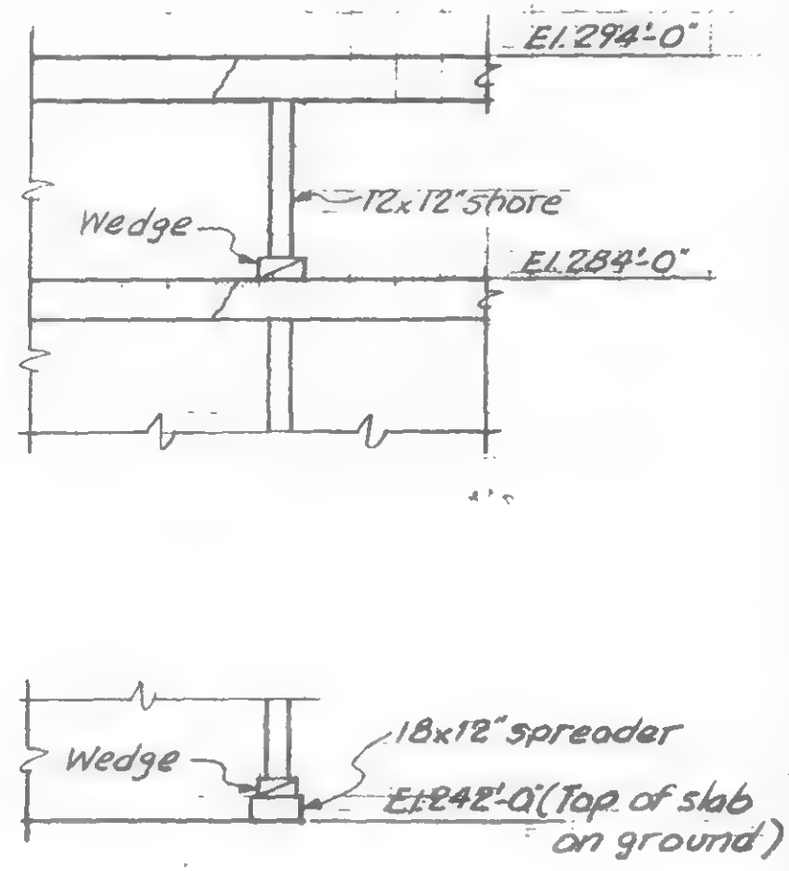


Typical Shoring Detail

Note #1

When temporary opening is poured, strighten up all existing bars and provide new add. reinf. of bars sizes same as existing.

LICENSED PROFESSIONAL ENGINEER LESLIE E. ROBERTSON No. 34300 UNIVERSITY OF THE STATE OF NEW YORK

DESIGNED M. RAMANI

DRAWN J. FRANQUI

REVIEWED

19-JK-1045

SKILLING HELLE CHRISTIANSEN ROBERTSON — Civil Engineers

PROJECT: [illegible] | TITLE: [illegible] | DATE: [illegible]

REVISIONS

(CHANGE No. 564-025-211)
Conference - Letter PNYA to SHGR on 9-8-71

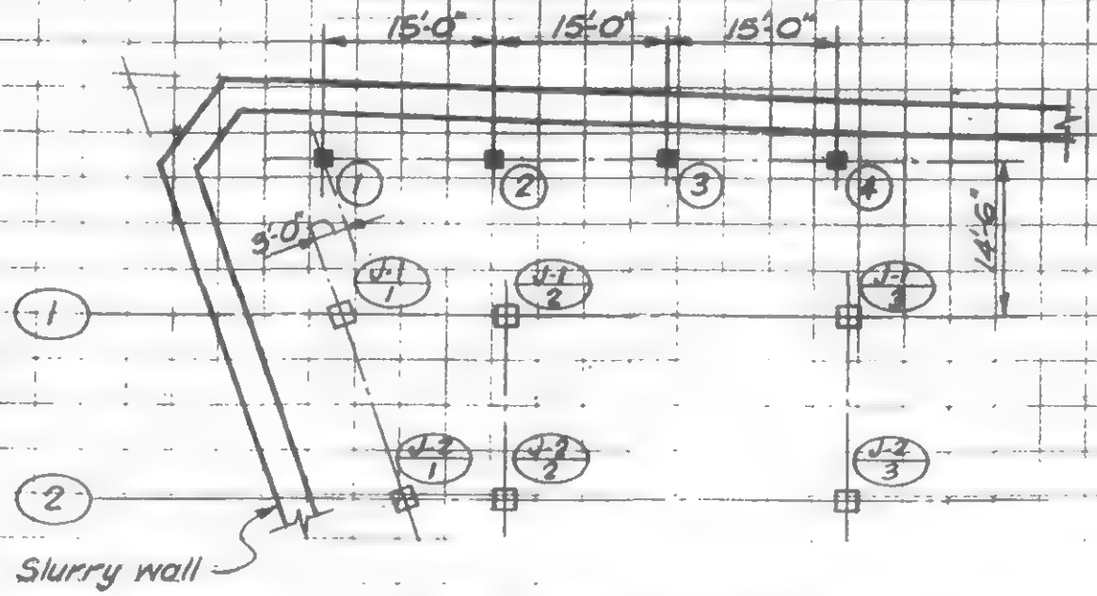


PART PLAN AT NW CORNER
(1/16" = 1'-0")

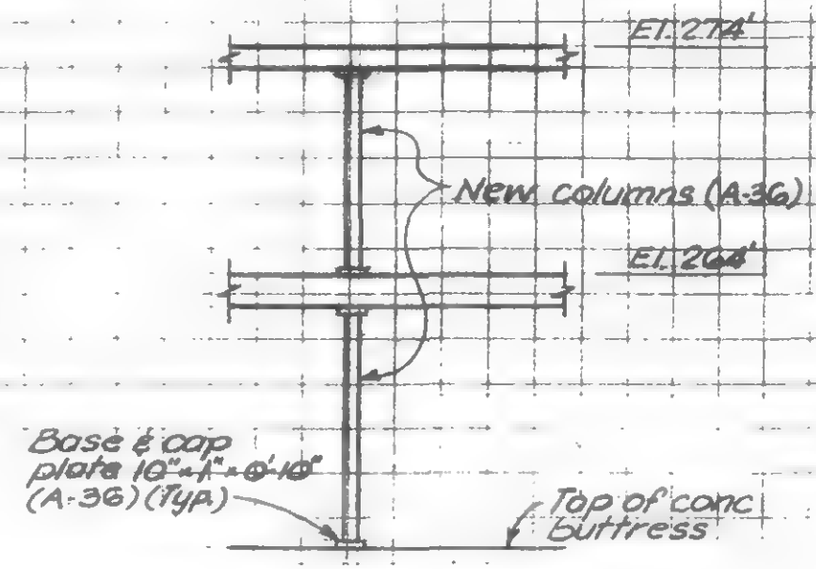


SECTION
(1/8" = 1'-0")

□ — Existing columns
■ — New columns (8WF31 typical)

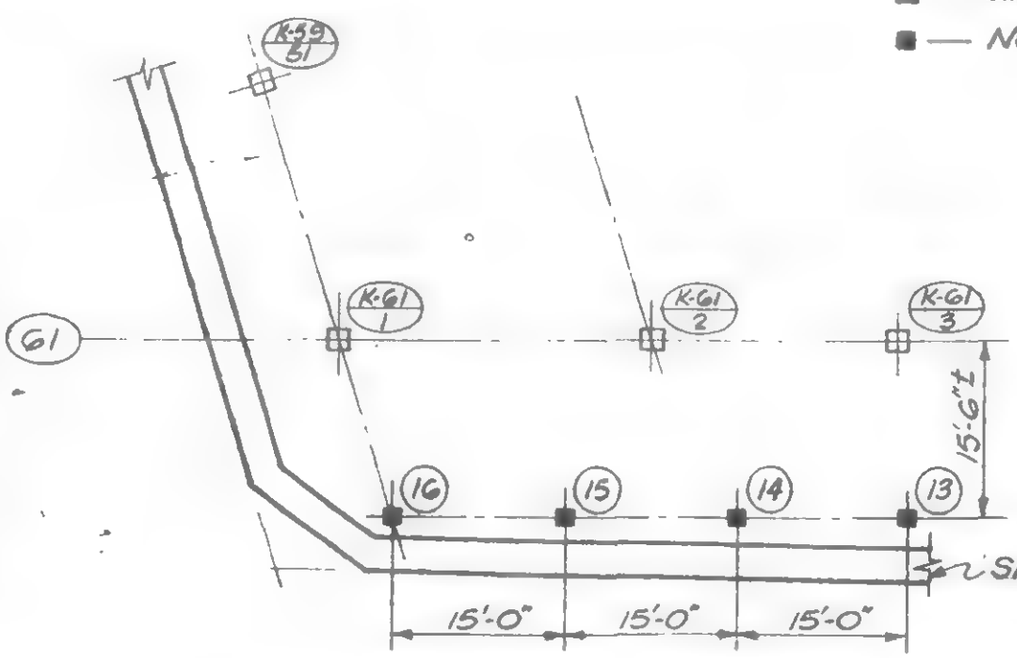


PART PLAN AT SW CORNER
(1/16" = 1'-0")

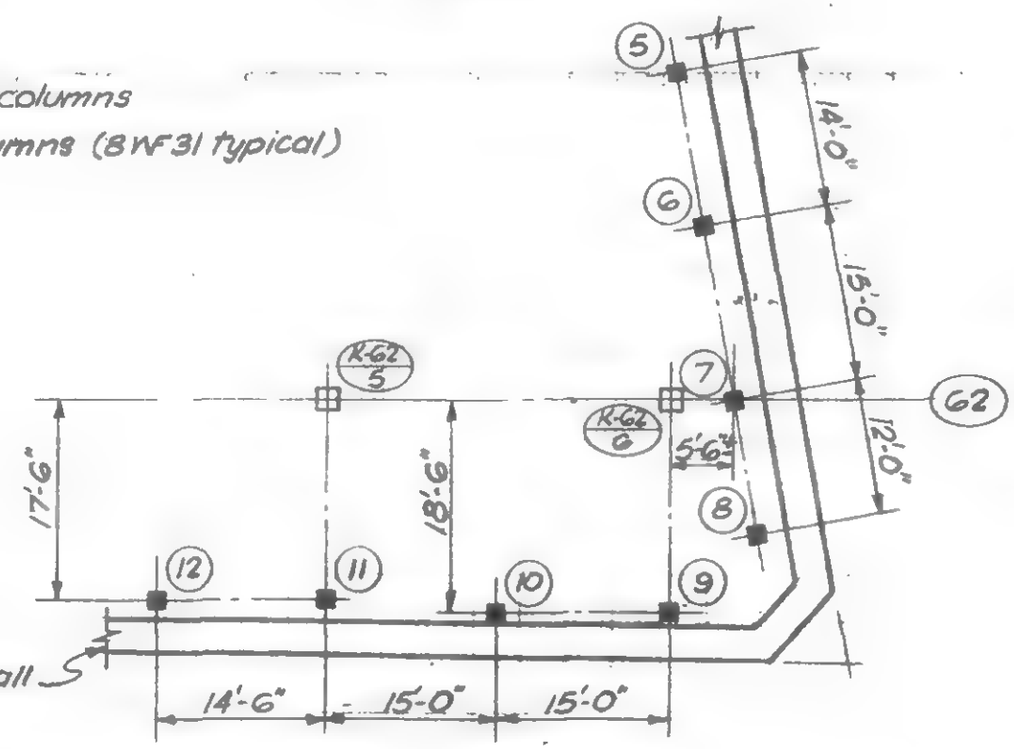


PART PLAN AT SE CORNER
(1/16" = 1'-0")

LICENSED PROFESSIONAL ENGINEER — LESLIE E. ROBERTSON — No. 34360 — STATE OF NEW YORK

DRAWN: SC

REVIEWED

19-JK-1046

SKILLING, HELLE, CHRISTIANSEN, ROBERTSON — Structural & Civil Engineers

PROJECT: THE WORLD TRADE CENTER | TITLE: PLAZA LEVEL SECTIONS K-1 | DATE: 10-7-71

REVISIONS

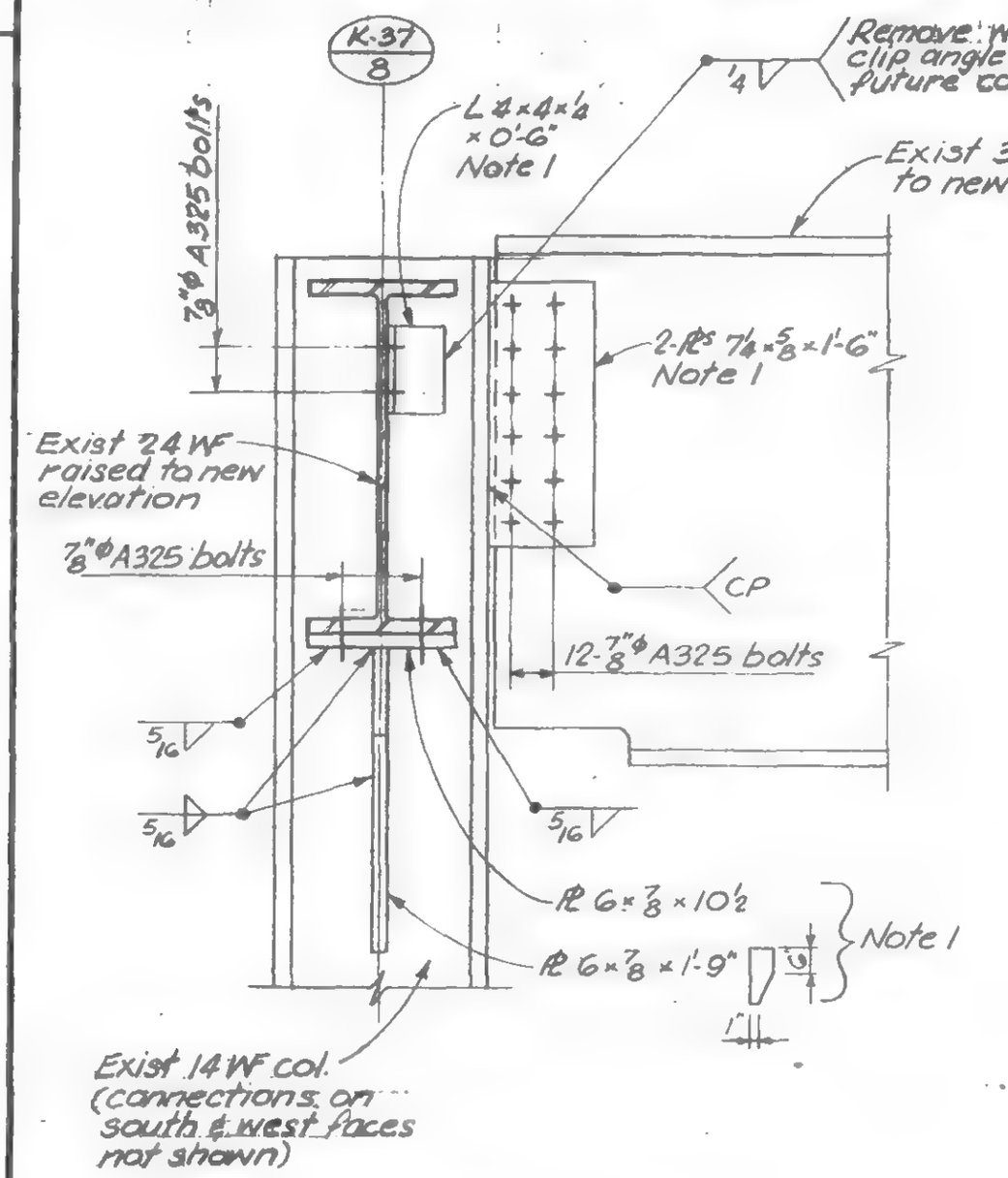


Detail A

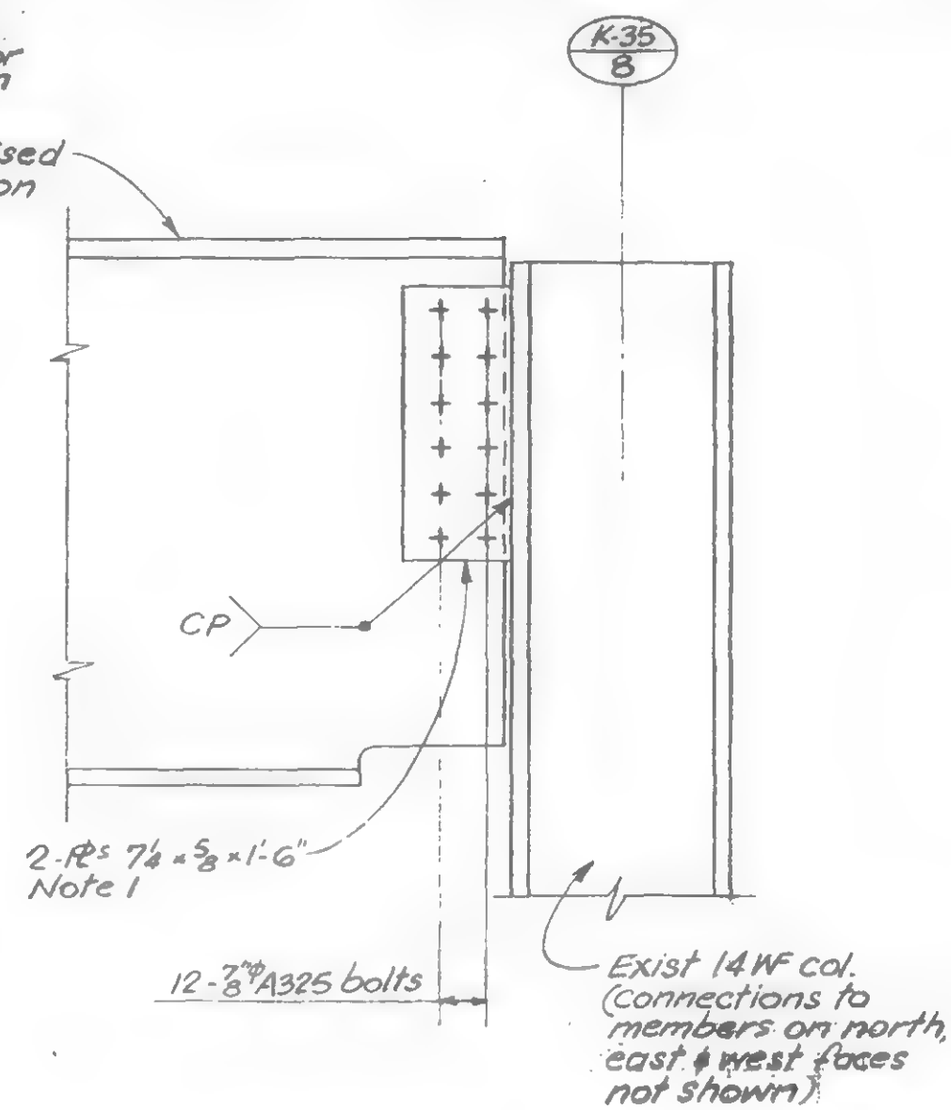


Detail B

Note 1: Remove existing connection and reuse material in new location if in satisfactory condition. Bolts must be new material.

SIGNED: HR

DRAWN: SC

REVIEWED:

19-K-1047.1

| SKILLING HELLE CHRISTIANSEN ROBERTSON Structural & Civil Engineers | PROJECT WORLD TRADE INFORMATION | DATE 10-4-71 | Sheet No. |
|---|---|---|---|
| | 332' LEVEL DWG SK-104 | PREPARED BY HOK | |
| | | APPROVED | |

19-K-1047 DET D.

24WF120 (330'-6") to 36WF245 (329'-4") 125k

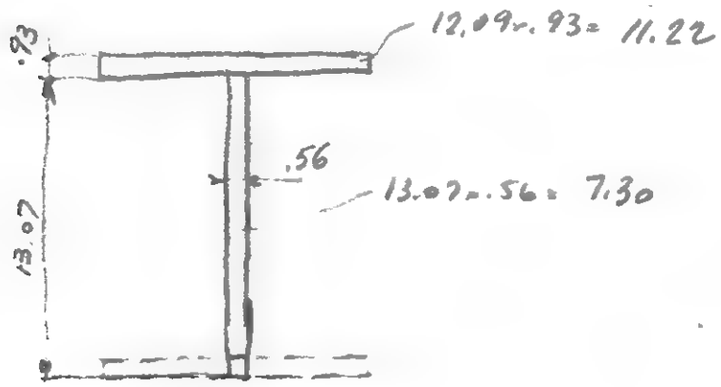


11.22 × .46 = 5.16
7.30 × 7.47 = 54.5
18.52 | 59.7
C.G. = 3.22
14 - 3.22 = 10.78

7.30 × (13.07)²/12 = 103.7
11.22 × (2.76)² = 85.5
7.30 × (4.25)² = 131.8
I = 320.9

S = 320.9 / 10.78 = 29.8 NG

M = 125 × 9.25 = 1152
$S_{req} = \frac{1152}{25} = 46$ Fy42 $\frac{1152}{22} = 52.4$ Fy36

REINF REQ'D

Try 12 × ½" A = 11.44 × 0.5 = 5.72

18.52 × 3.22 = 59.7
5.72 × 13.75 = 78.5
24.24 | 138.2
C.G. 5.7
14 - 5.7 = 8.3

I

320.9
18.52 × (2.48)² = 114.
5.72 × (8.05)² = 370
805.

S = 805 / 8.3 = 97 > 52.4 OK

SHEAR $\frac{125}{13.07 - .56} = 16.5 < 17.0$ OK

$\frac{V a_q}{I} = \frac{125 \times 6 \times 8.05}{805} = 7.5$ k/in

DEVELOPMENT

$\frac{6 w^2 e}{2 \times 8.4 + 2 \times 5.6}$ 28000 KSI = L = 4.7

EXTEND 1'-2"

USE ⊥ = 14 × 5.6 × 2

SKILLING, HELLE, CHRISTIANSEN, ROBERTSON — Structural & Civil Engineers

PROJECT: THE WORLD TRADE CENTER | TITLE: PLAZA LEVEL SECTIONS K-1 | DATE: 10-7-71

REVISIONS

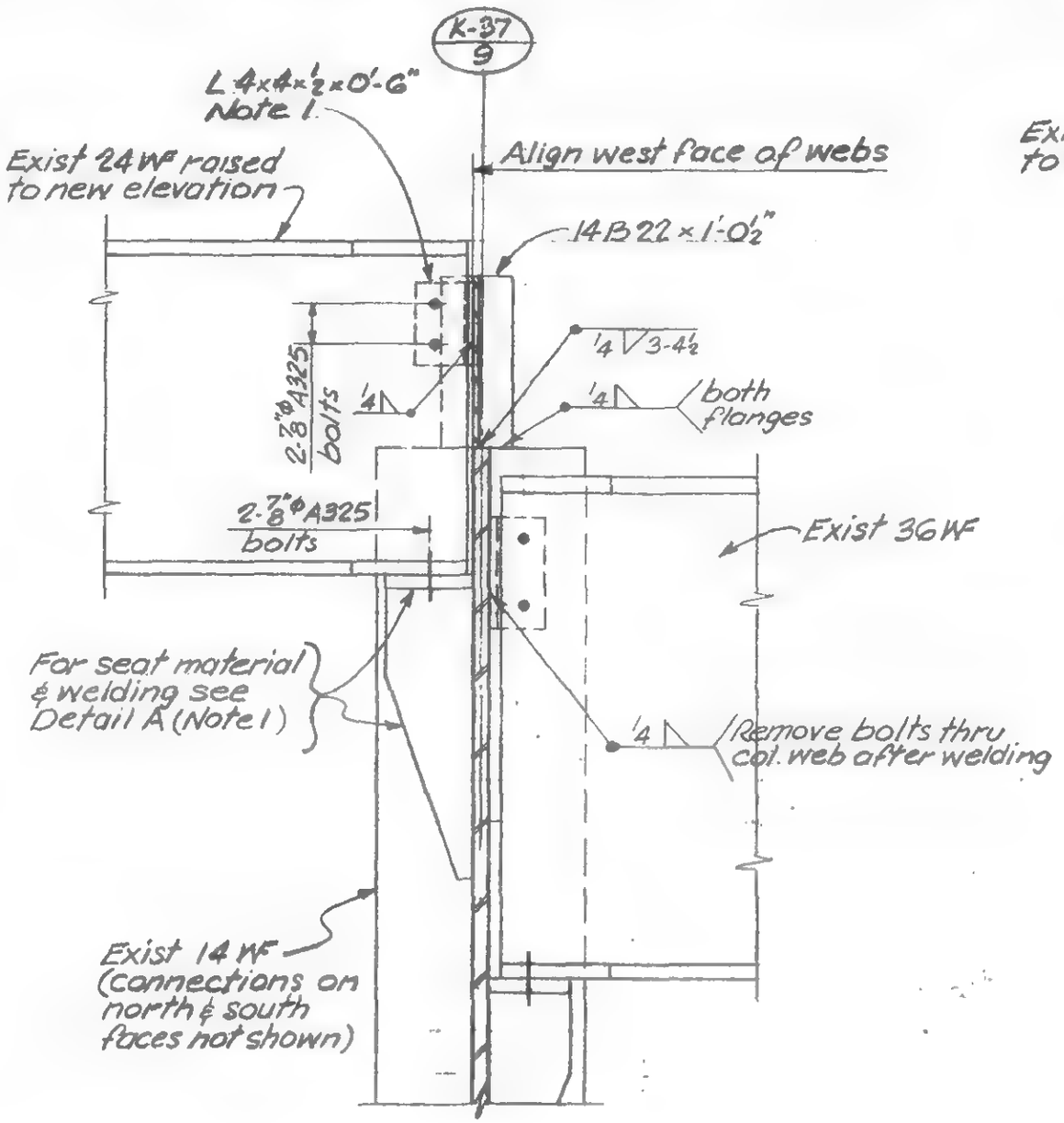


Detail C

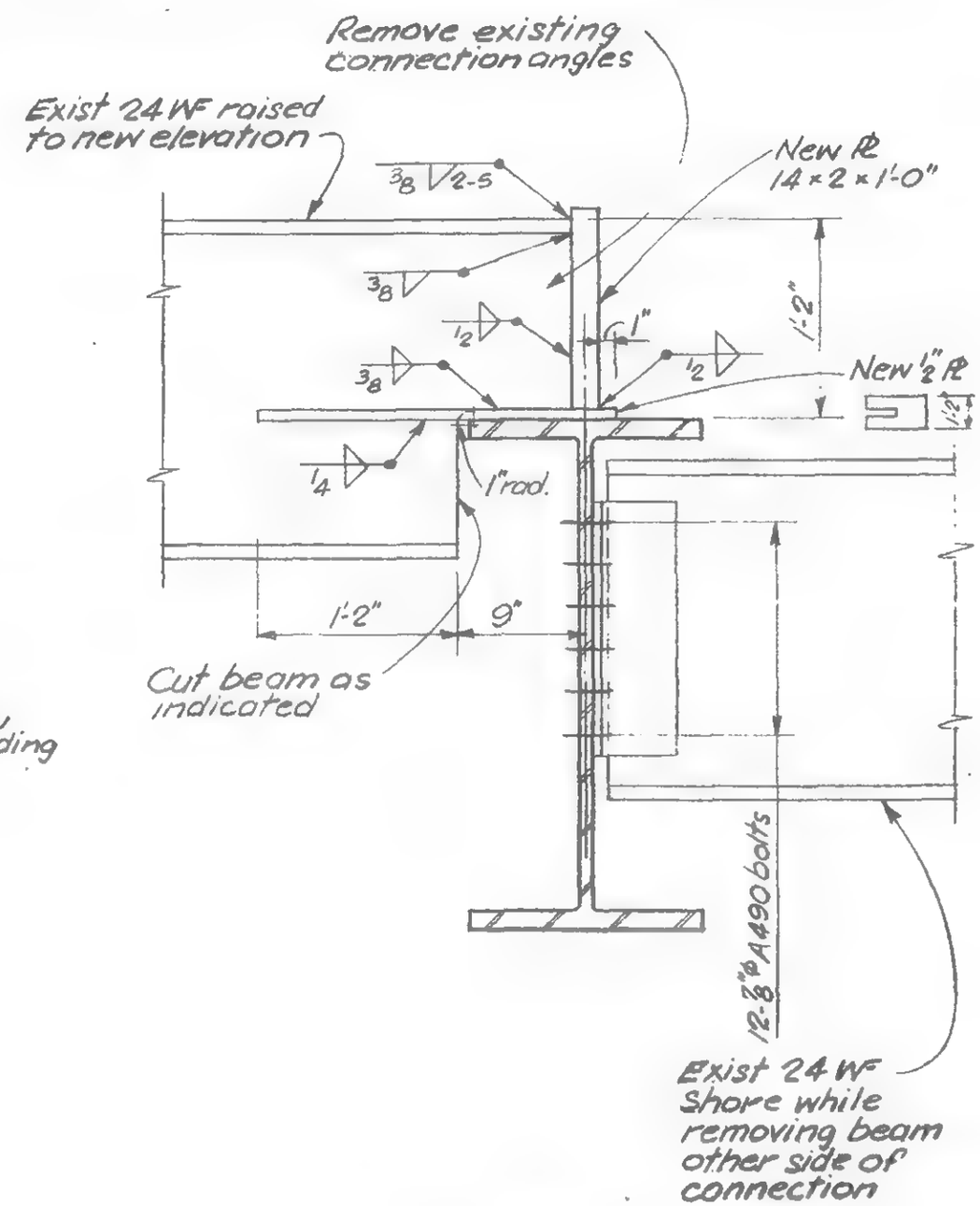


Detail D

LICENSED PROFESSIONAL ENGINEER — LESLIE E. ROBERTSON — No. 34360 — UNIVERSITY OF THE STATE OF NEW YORK

DESIGNED: HR

DRAWN: SC

REVIEWED:

19-K-1047.2

SKILLING, HELLE, CHRISTIANSEN, ROBERTSON — Structural & Civil Engineers

PROJECT: THE WORLD TRADE CENTER | TITLE: KEY PLAN FOR LOCATION OF LEGS — CALDER STABILE | DATE: 10-1-71

REVISIONS

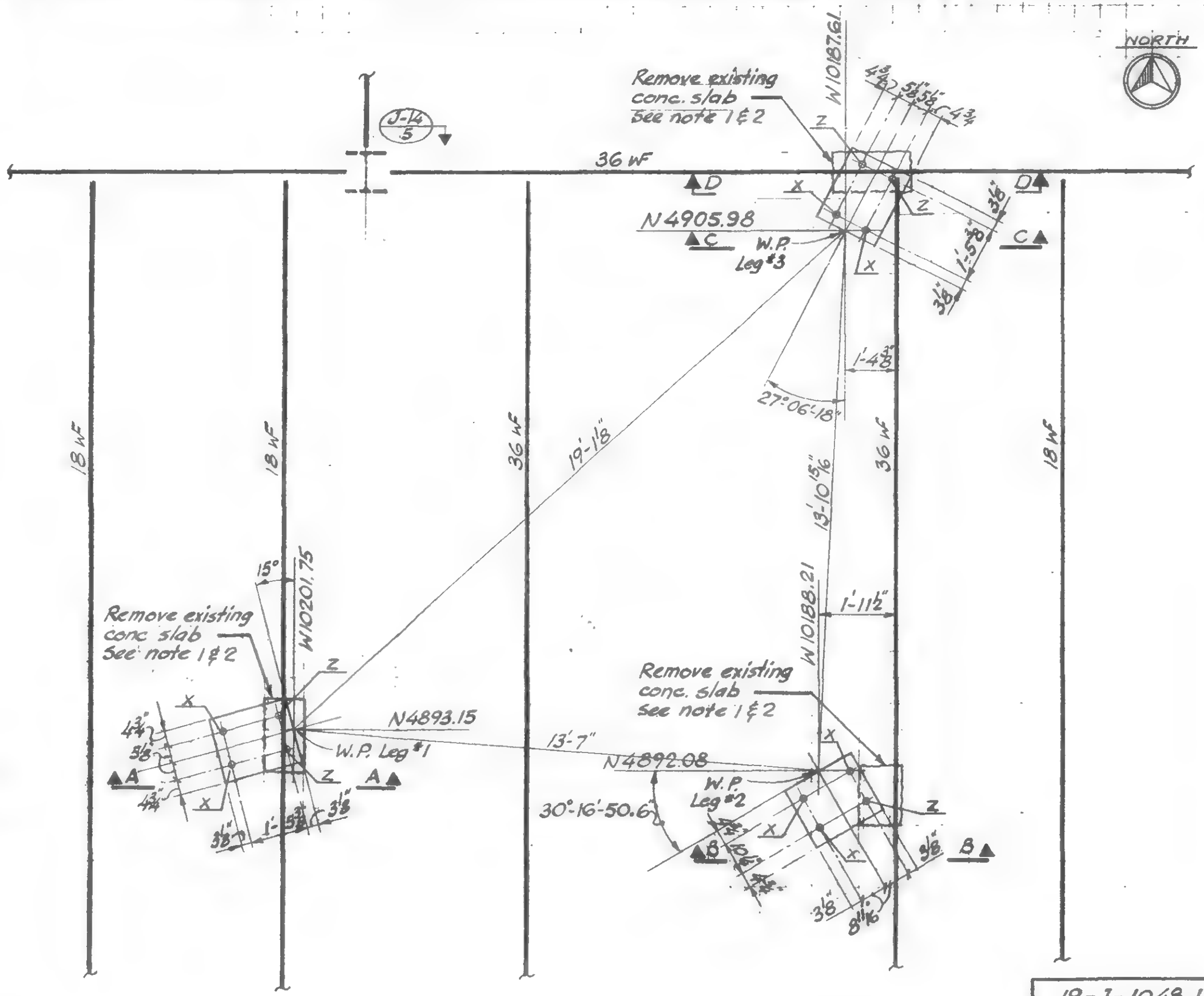

DESIGNED

DRAWN

REVIEWED

19-J-1048.1

SKILLING, HELLE, CHRISTIANSEN, ROBERTSON — Structural & Civil Engineers

PROJECT: THE WORLD TRADE CENTER | TITLE: SECTIONS - CALDER STABILE | DATE: 10-1-74

REVISIONS

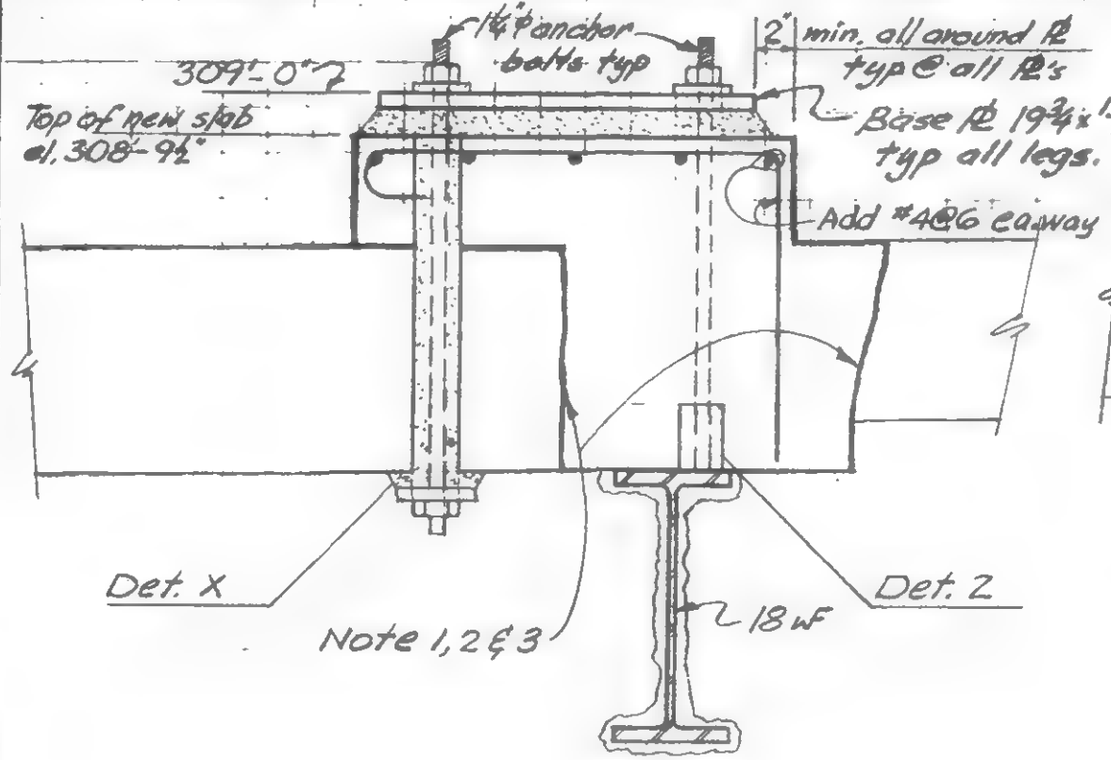


Section A-A

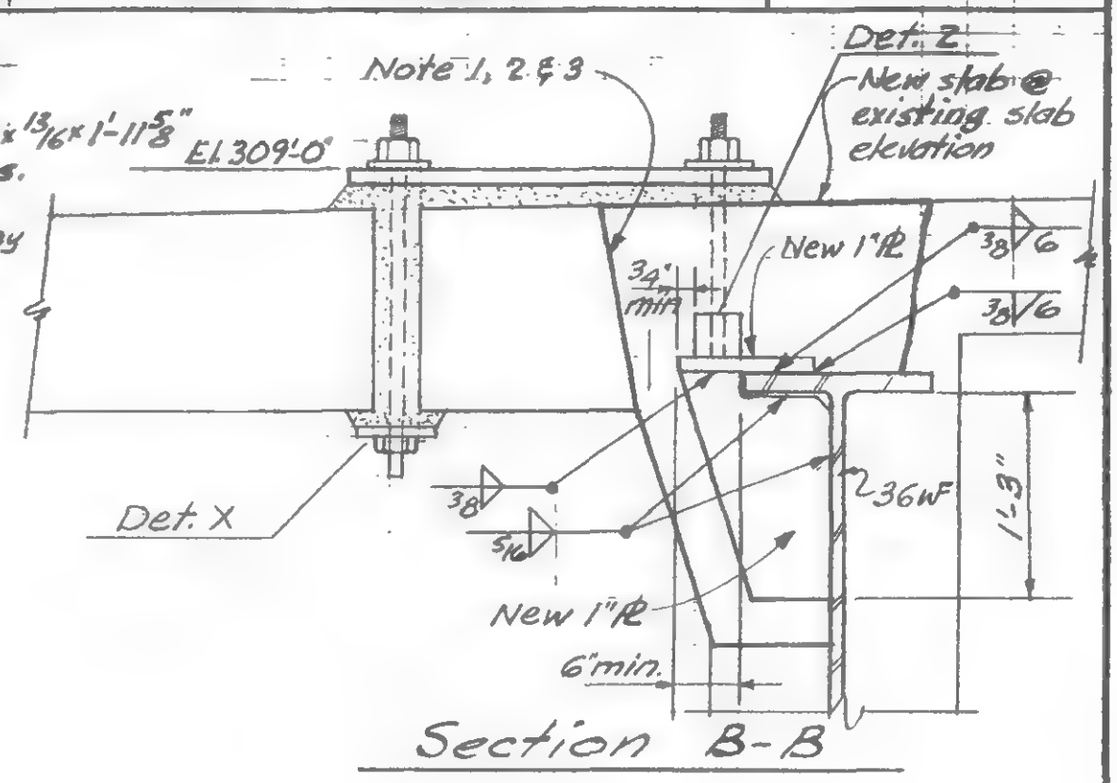


Section B-B

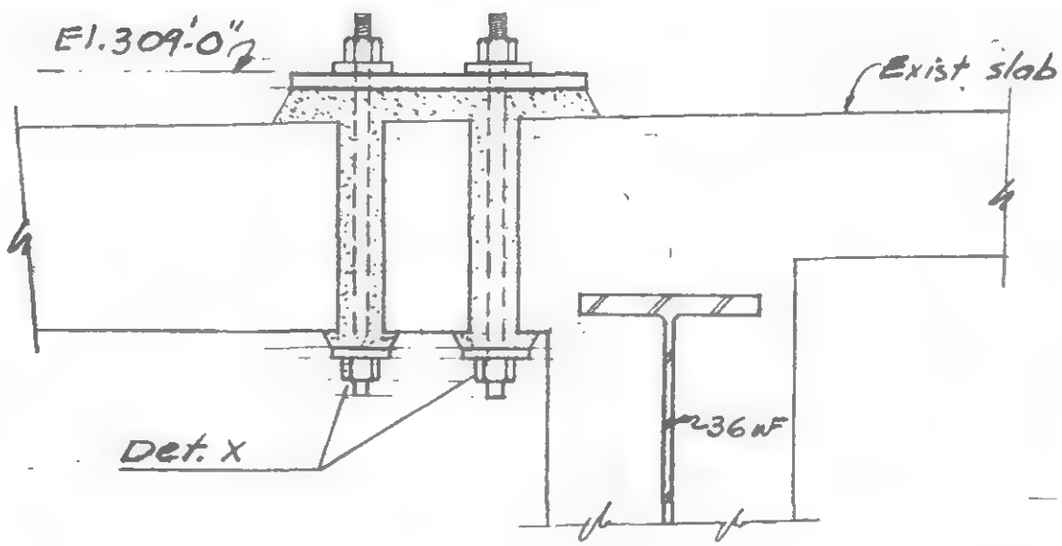


Section C-C

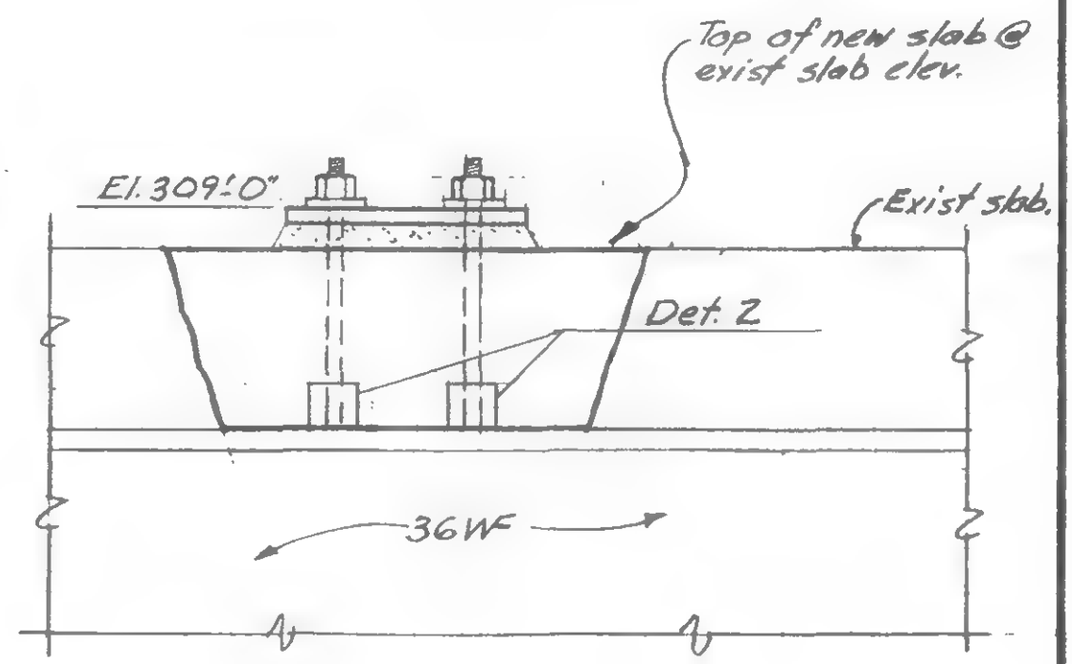


Section D-D

DESIGNED

REVIEWED

19-J-1048.2

SKILLING, HELLE, CHRISTIANSEN, ROBERTSON — Structural & Civil Engineers

PROJECT: THE WORLD TRADE CENTER | TITLE: NOTES & DETAILS – CALDER STABILE | DATE: 10-1-71

REVISIONS

Notes:

1. Remove existing concrete slab, without damaging existing reinforcement.
2. Remove exist concrete at slope (as shown in sections) and with very rough surface.
3. Prior to casting a new slab, all exist surfaces shall be completely coated with approved epoxy bonding compound.
4. All new concrete shall be approved "non shrinkage" type f'c = 4000 psi.
5. All the work shall be carried out according to the Project specifications.
6. Location of legs and other detail are as supplied by the PNYA sketch SK-C55-0, SK-C55-1, 2 & 3 dated 5-10-71
7. All field welds shall be made with E70xx electrodes.
8. All washers shall be PL 4"x1"x0'-4" (A36) with 15/16"ϕ hole.

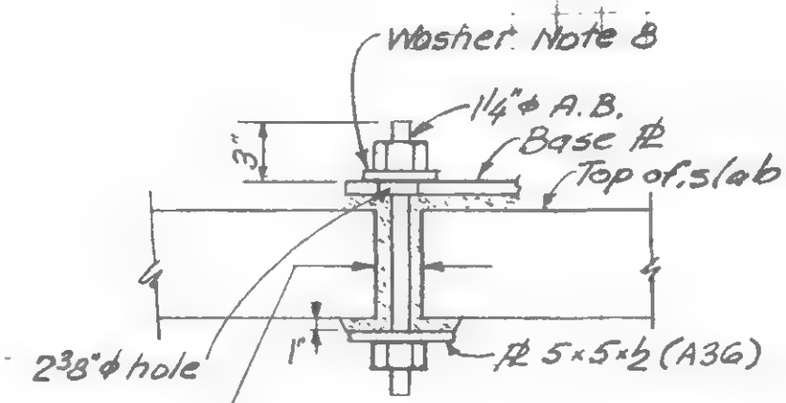


Detail X

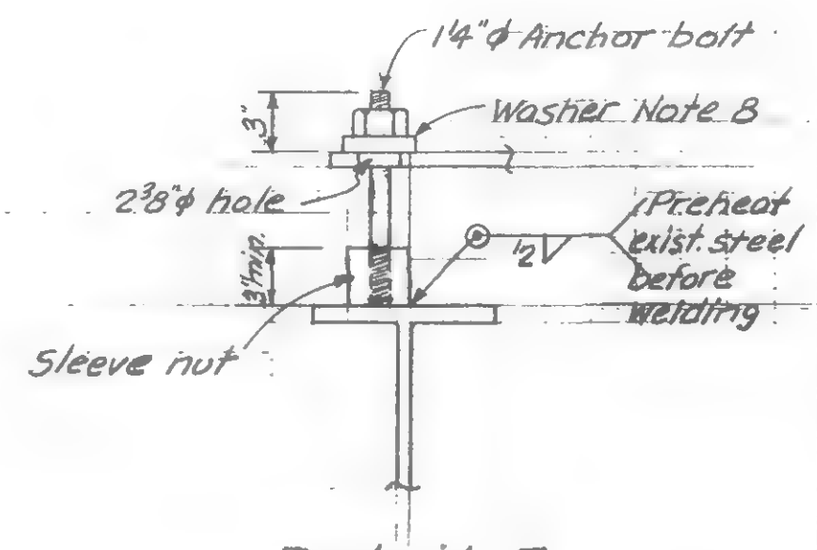


Detail Z

LICENSED PROFESSIONAL ENGINEER — LESLIE E. ROBERTSON — No 34360 — UNIVERSITY OF THE STATE OF NEW YORK

DESIGNED

DRAWN

REVIEWED

19-J-1048.3

SKILLING, HELLE, CHRISTIANSEN, ROBERTSON · Structural & Civil Engineers

PROJECT: THE WORLD TRADE CENTER | TITLE: SECTIONS - El. 310 STAIR #4 | DATE: 10-29-71

REVISIONS

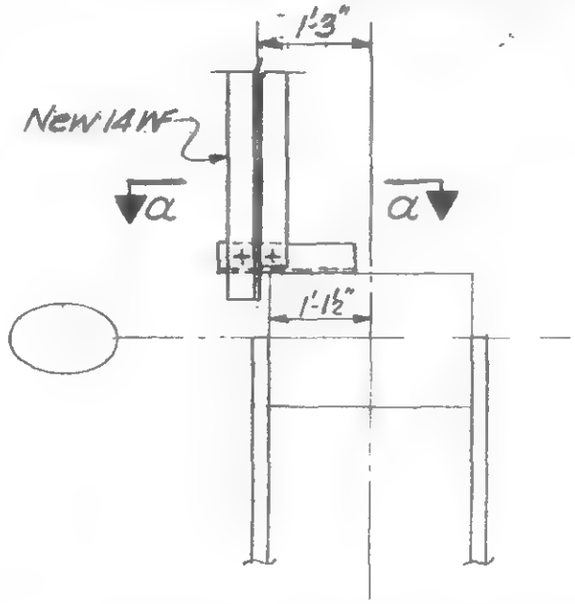


Detail 1049 A

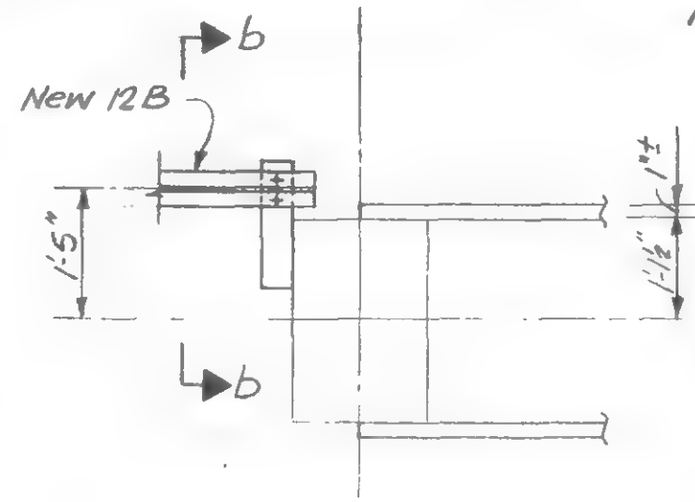


Detail 1049 B

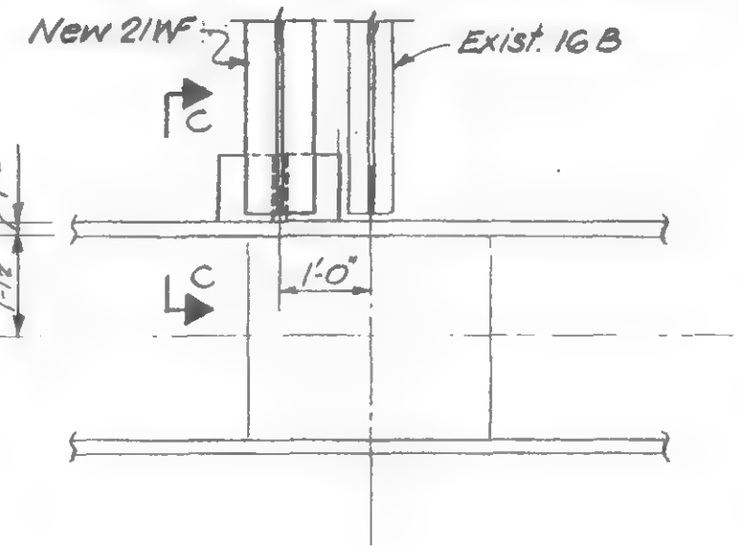


Detail 1049 C

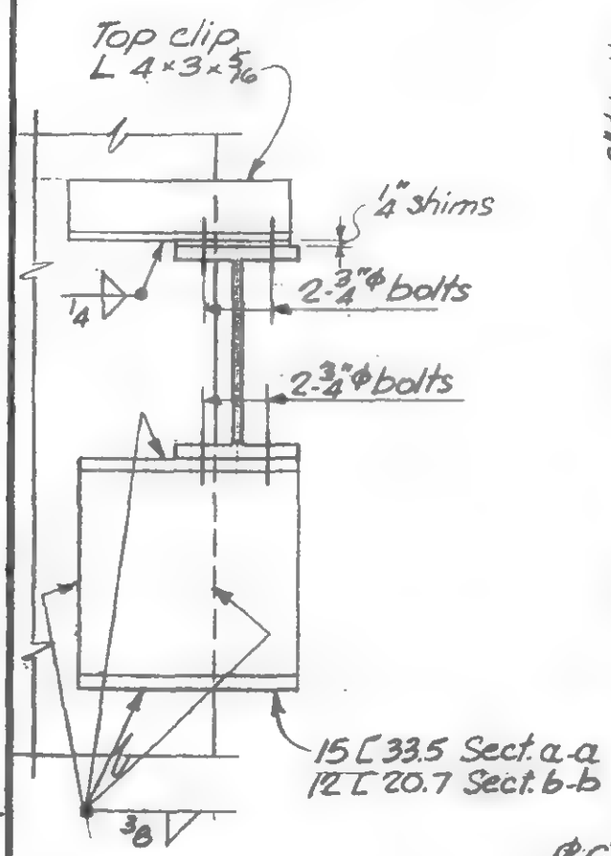


Section a-a

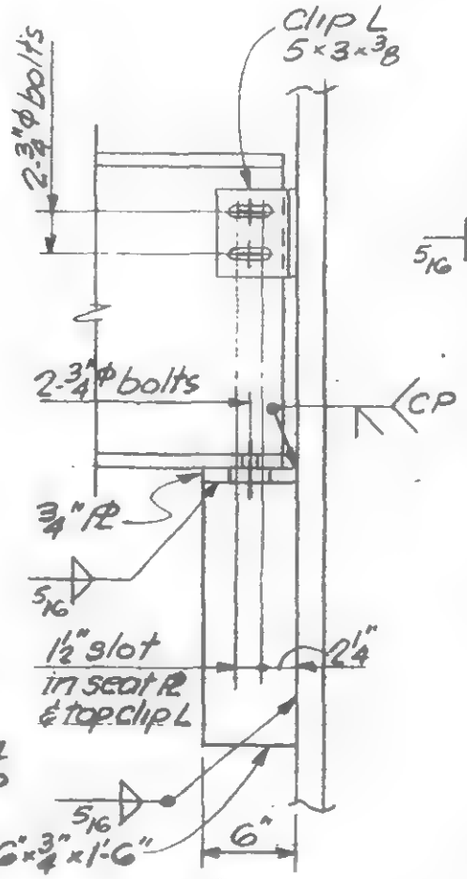


Section c-c

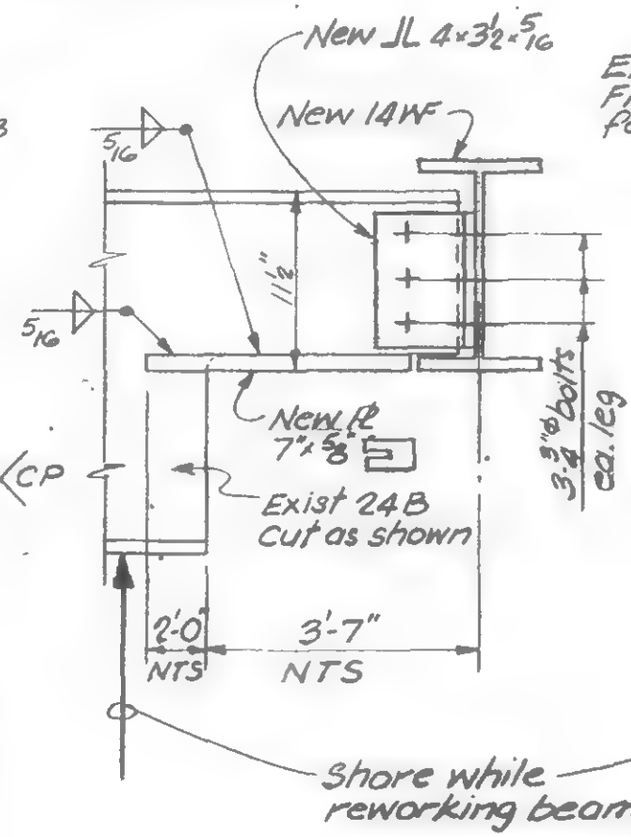


Detail 1049 D




Detail 1049 E

Section b-b opp. hand & as noted

LICENSED PROFESSIONAL ENGINEER
LESLIE E. ROBERTSON
No. 34360
UNIVERSITY OF THE STATE OF NEW YORK

SIGNED

DRAWN SC

REVIEWED

19-K-1049

SKILLING, HELLE, CHRISTIANSEN, ROBERTSON — Structural & Civil Engineers

PROJECT: THE WORLD TRADE CENTER | TITLE: SECTIONS - EL 310 STAIR #4 | DATE: 10-29-71

REVISIONS

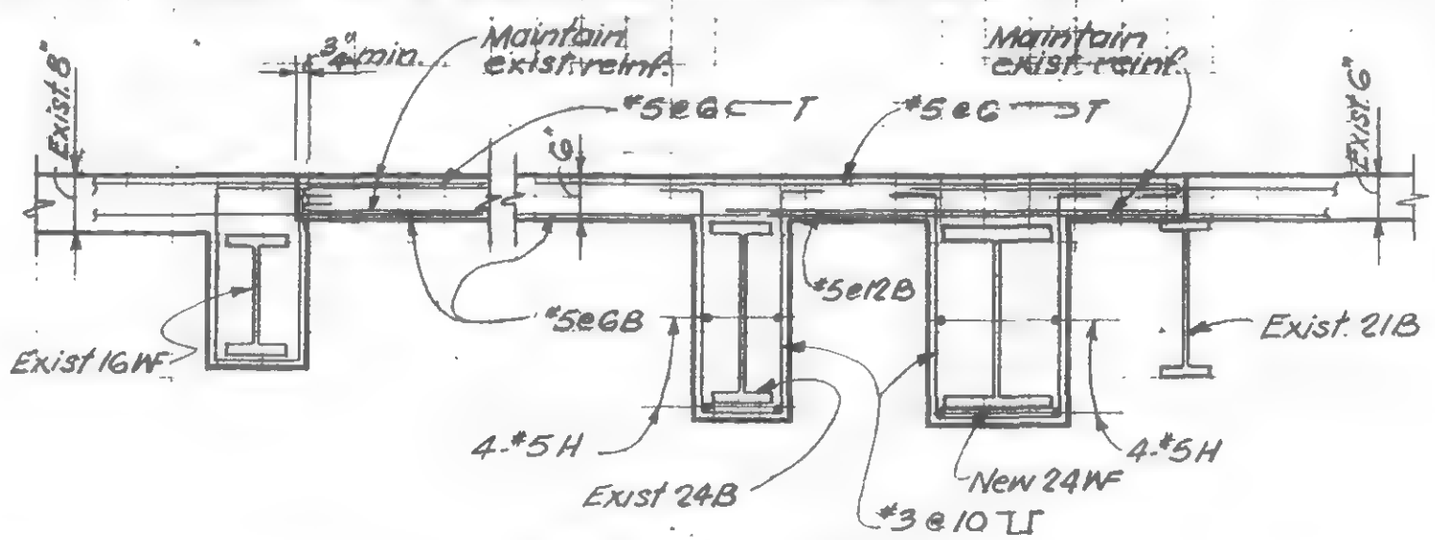


Section A-A

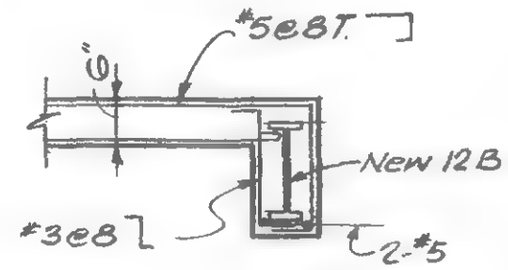


Section C-C

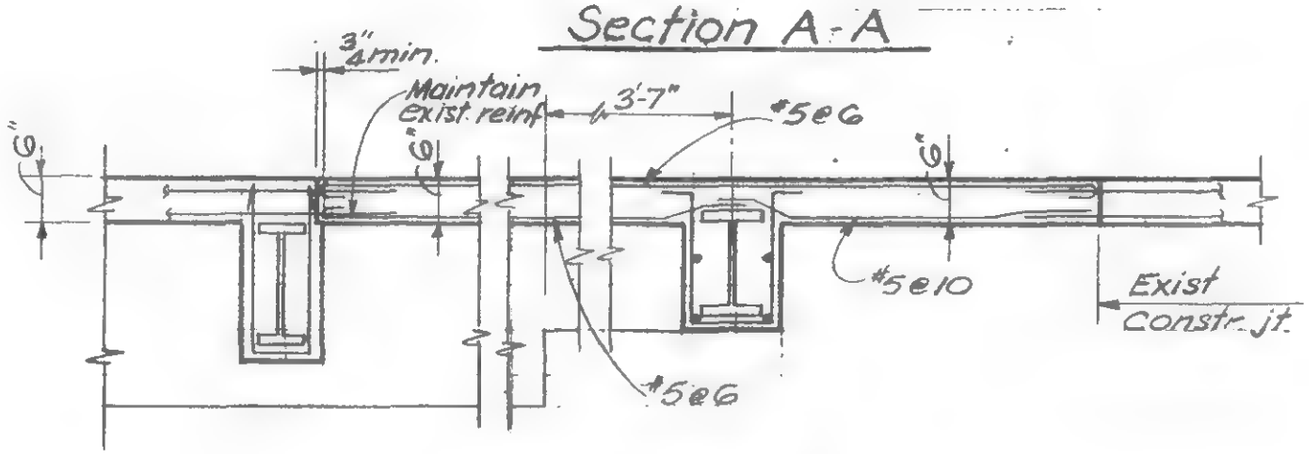


Section B-B

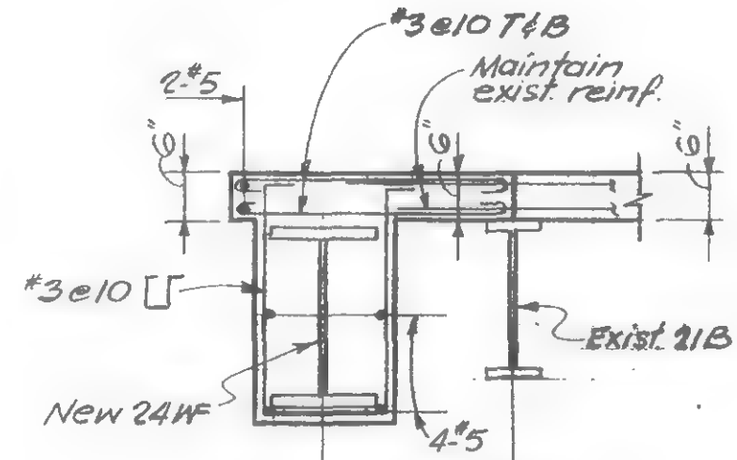


Section D-D

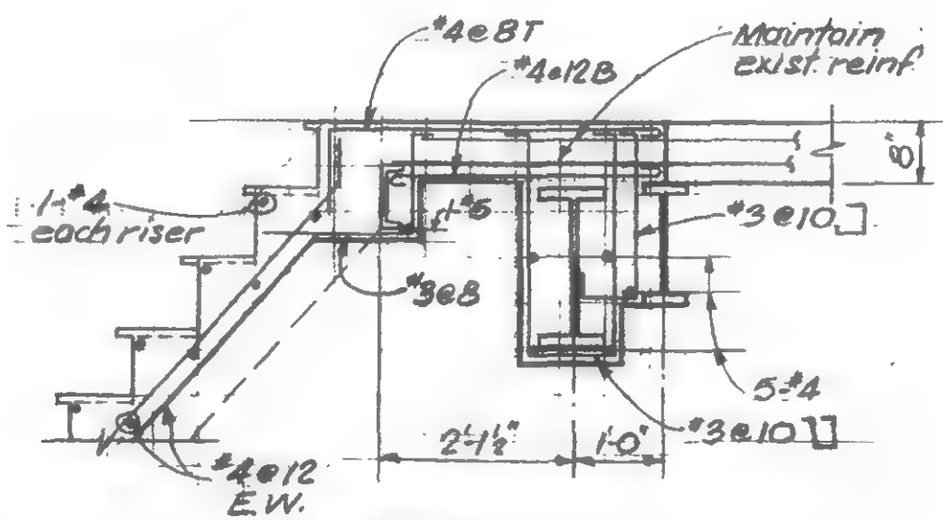


Section F-F

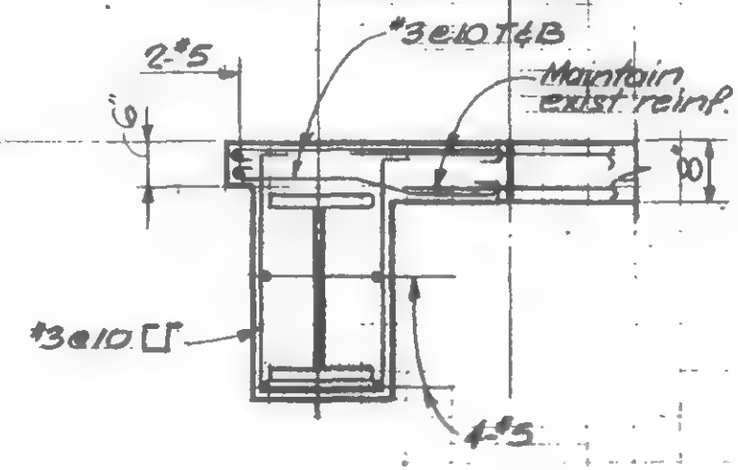


Section E-E

LICENSED PROFESSIONAL ENGINEER — LESLIE E. ROBERTSON — No. 34980 — UNIVERSITY OF THE STATE OF NEW YORK

DESIGNED

DRAWN S.C.

REVIEWED

19-K-1050

SKILLING, HELLE, CHRISTIANSEN, ROBERTSON — Structural & Civil Engineers

PROJECT: THE WORLD TRADE CENTER | TITLE: EMERGENCY GENERATOR PLATFORM - EL 246'-6" JS&KI | DATE: 12-2-71

REVISIONS

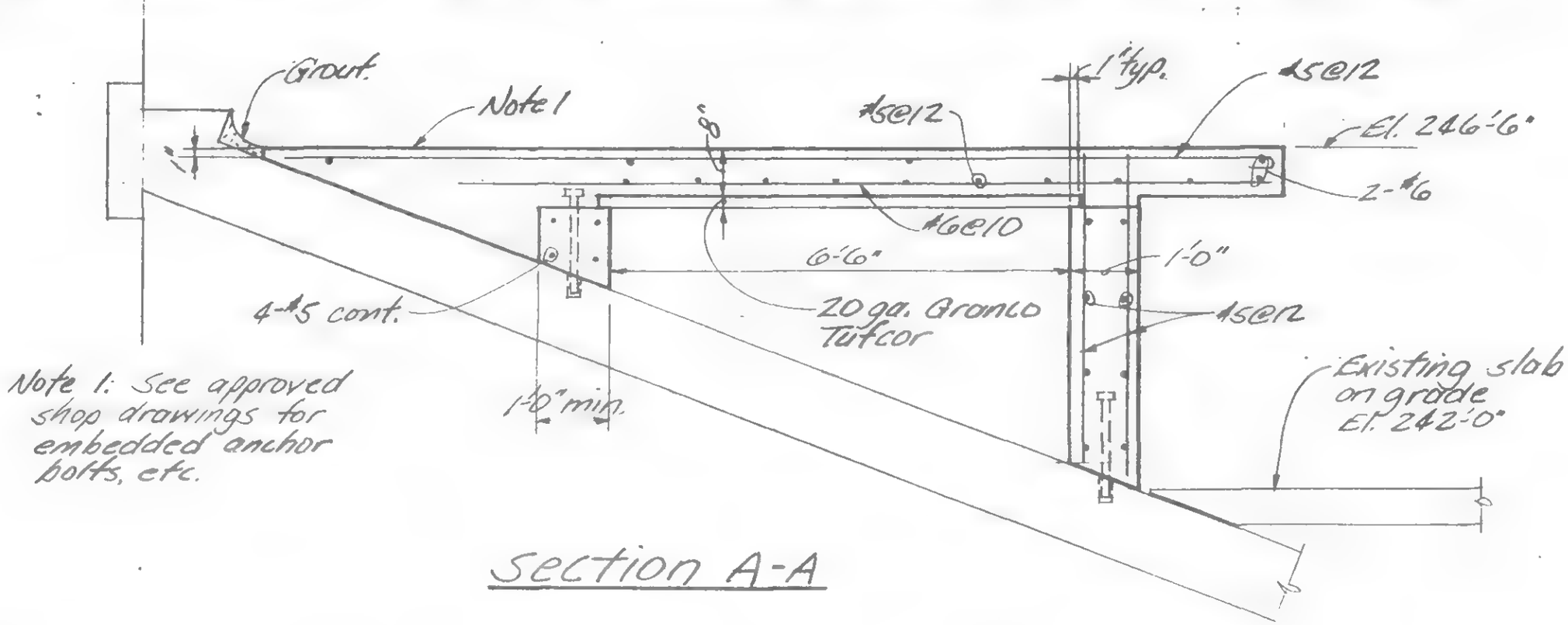


Note 1: See approved shop drawings for embedded anchor bolts, etc.

Section A-A

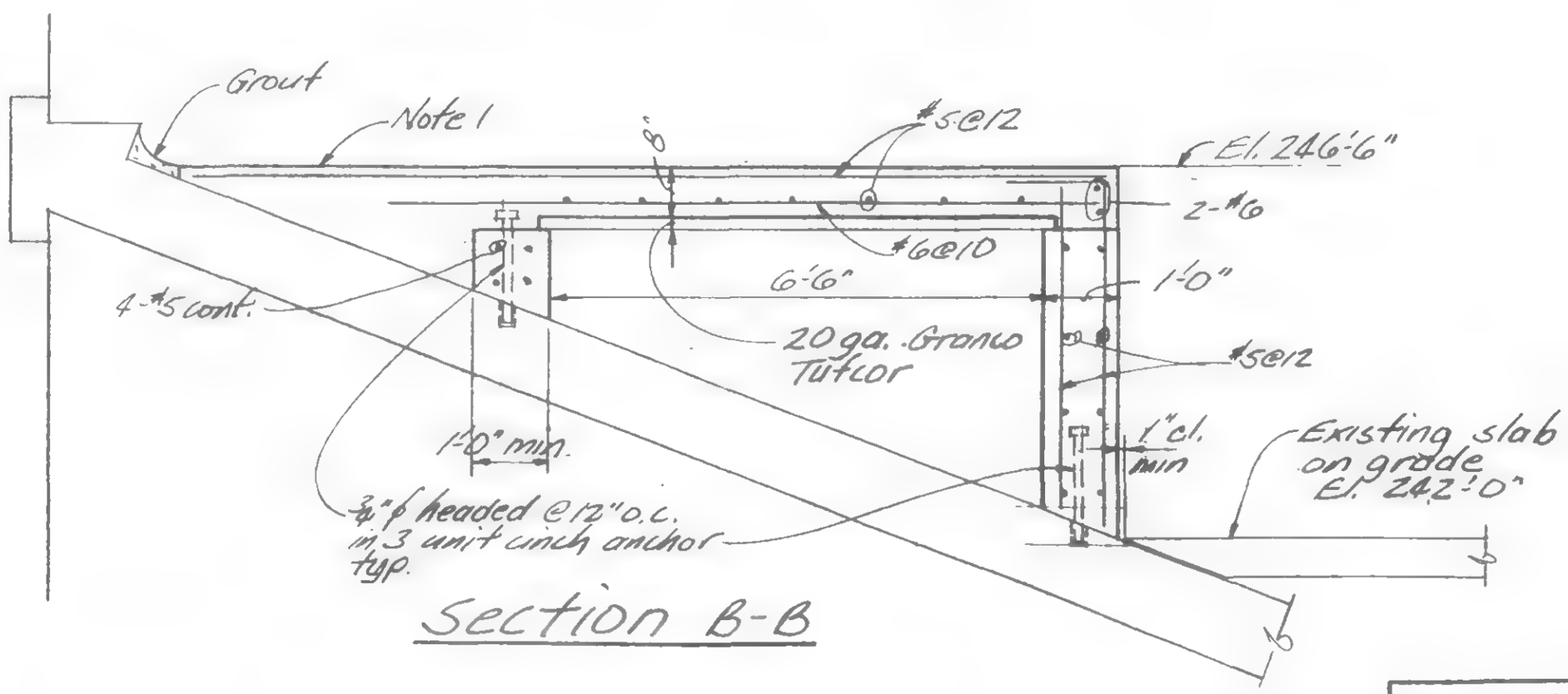


Section B-B

LICENSED PROFESSIONAL ENGINEER — LESLIE E. ROBERTSON — No. 34360 — UNIVERSITY OF THE STATE OF NEW YORK

DESIGNED

DRAWN

REVIEWED

19-JK-1051.1

SKILLING, HELLE, CHRISTIANSEN, ROBERTSON — Structural & Civil Engineers

PROJECT: THE WORLD TRADE CENTER | TITLE: EMERGENCY GENERATOR PLATFORM - EL 246'-6" JS & KI | DATE: 12-2-71

REVISIONS

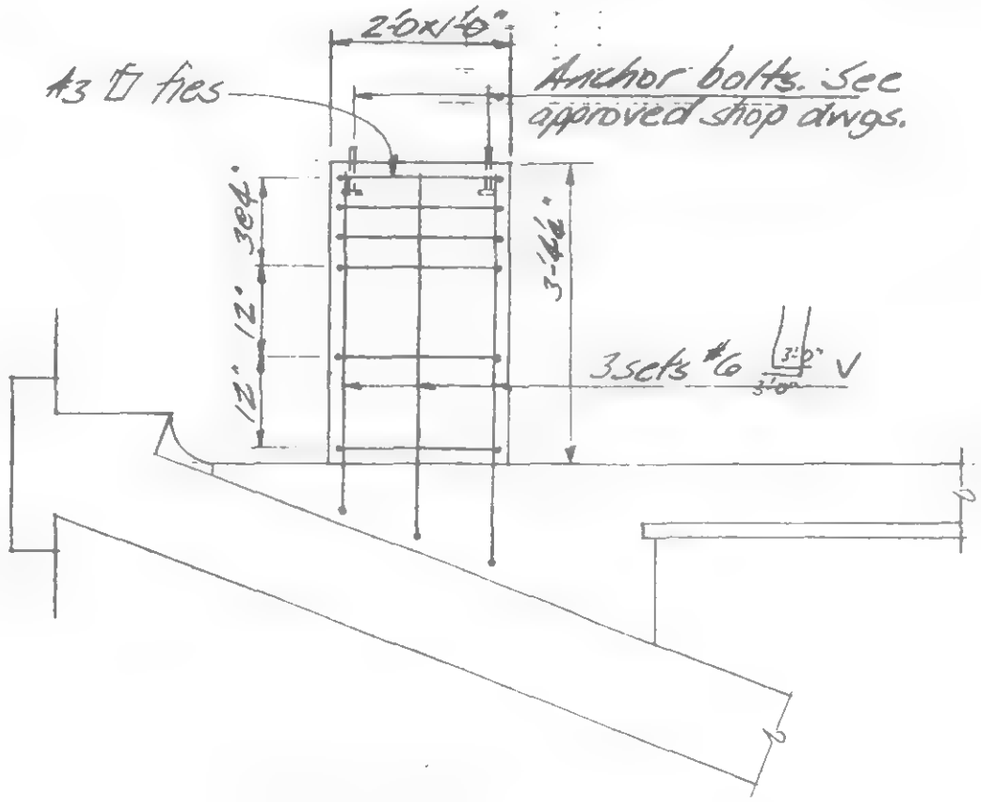


Section C-C

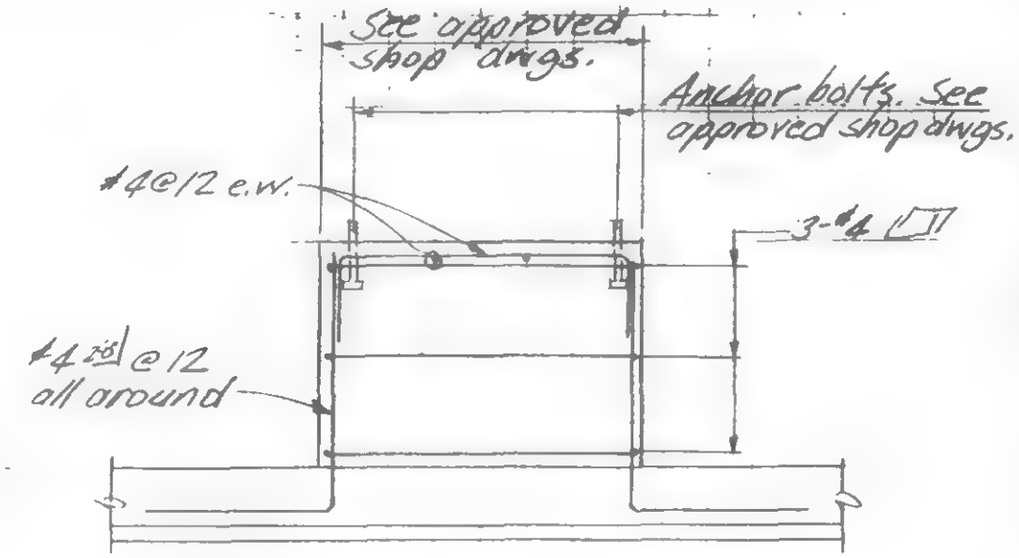


Section D-D

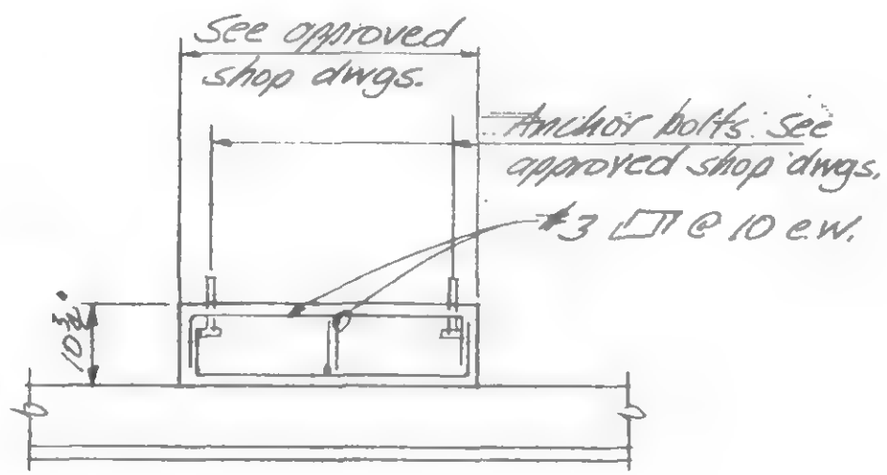


Section E-E

DESIGNED

DRAWN

REVIEWED

19-JK-1051.Z

SKILLING, HELLE, CHRISTIANSEN, ROBERTSON — Structural & Civil Engineers

PROJECT: THE WORLD TRADE CENTER

TITLE: DETAIL FOR SHEAR HEAD REPAIR

DATE: 12-23-71

REVISIONS

3-10-72

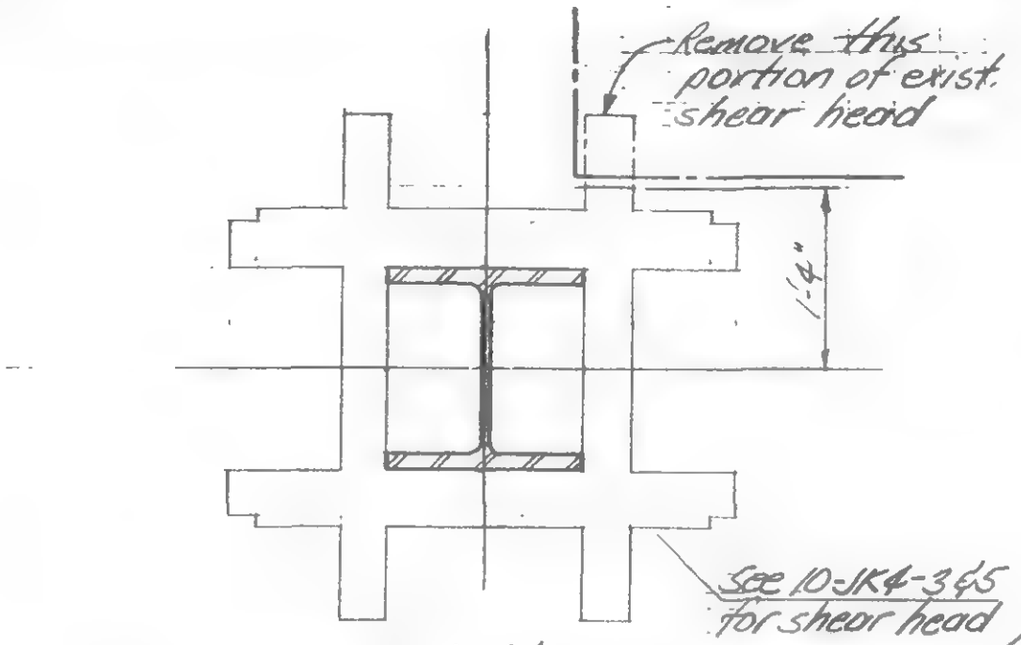


Detail A

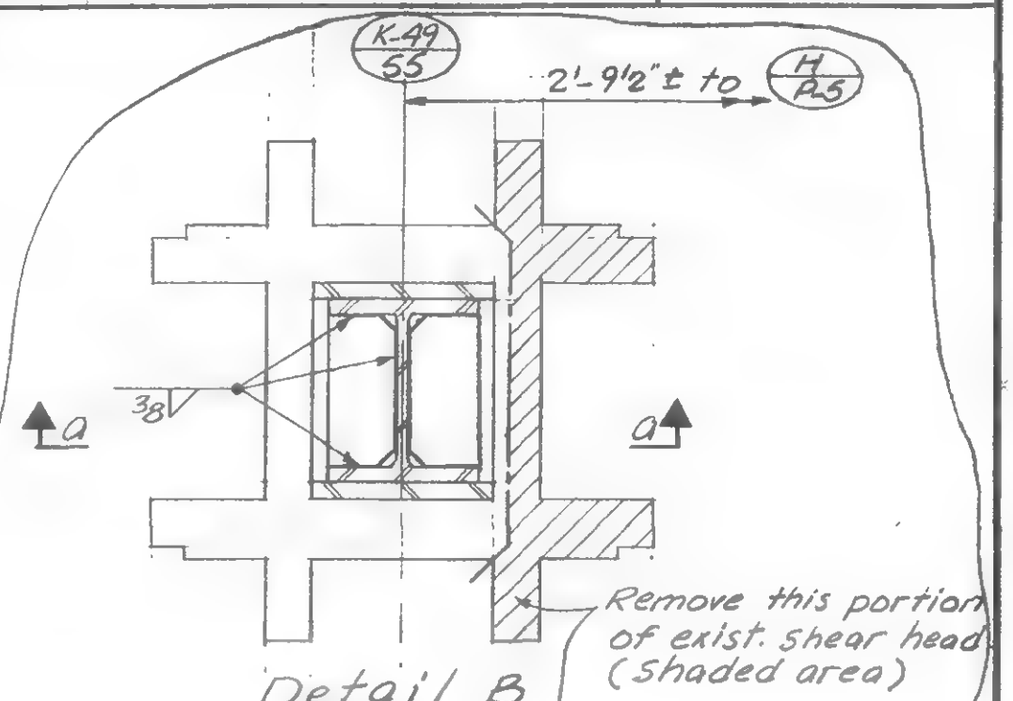


Detail B

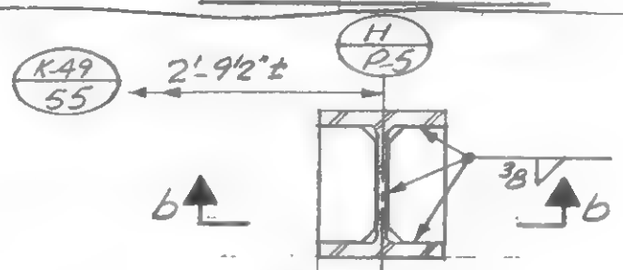


Detail C

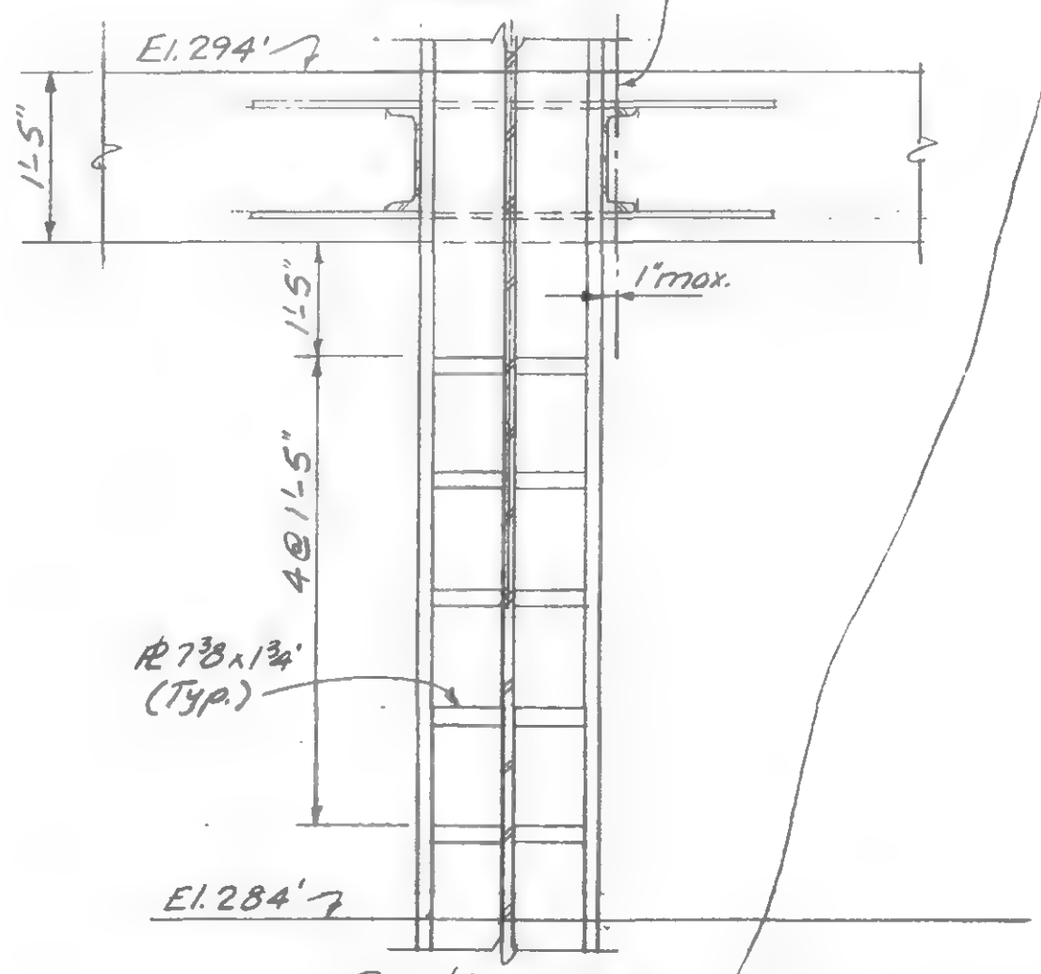


Section a-a
(Not to scale)

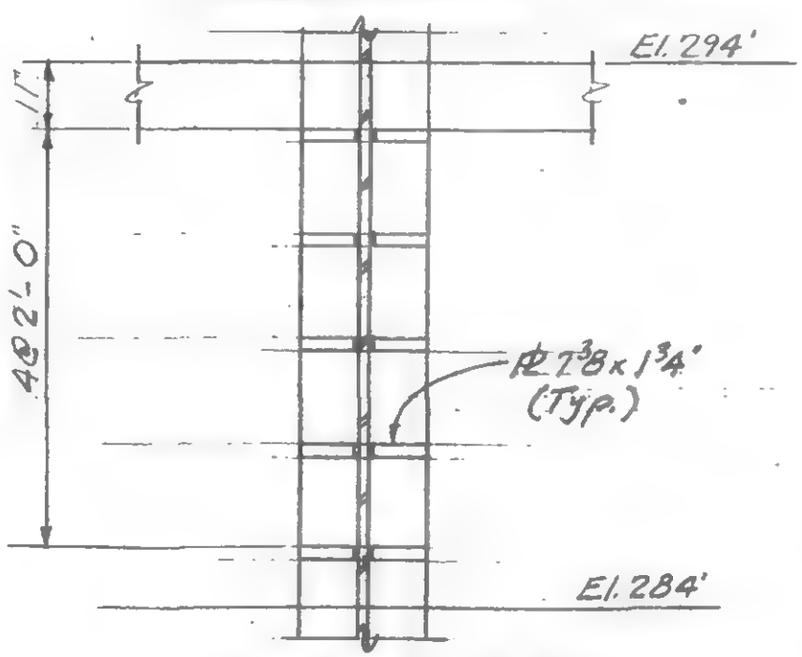


Section b-b
(Not to scale)

LICENSED PROFESSIONAL ENGINEER — LESLIE E. ROBERTSON — No. 34360 — UNIVERSITY OF THE STATE OF NEW YORK

DESIGNED: K. Chiang

DRAWN: J.A. & A.F.

REVIEWED: LER

19-K-1052.1

SKILLING, HELLE, CHRISTIANSEN, ROBERTSON — Structural & Civil Engineers

PROJECT: THE WORLD TRADE CENTER | TITLE: BEAM REPAIR AT EL. 310 | DATE: 12/23/71

REVISIONS

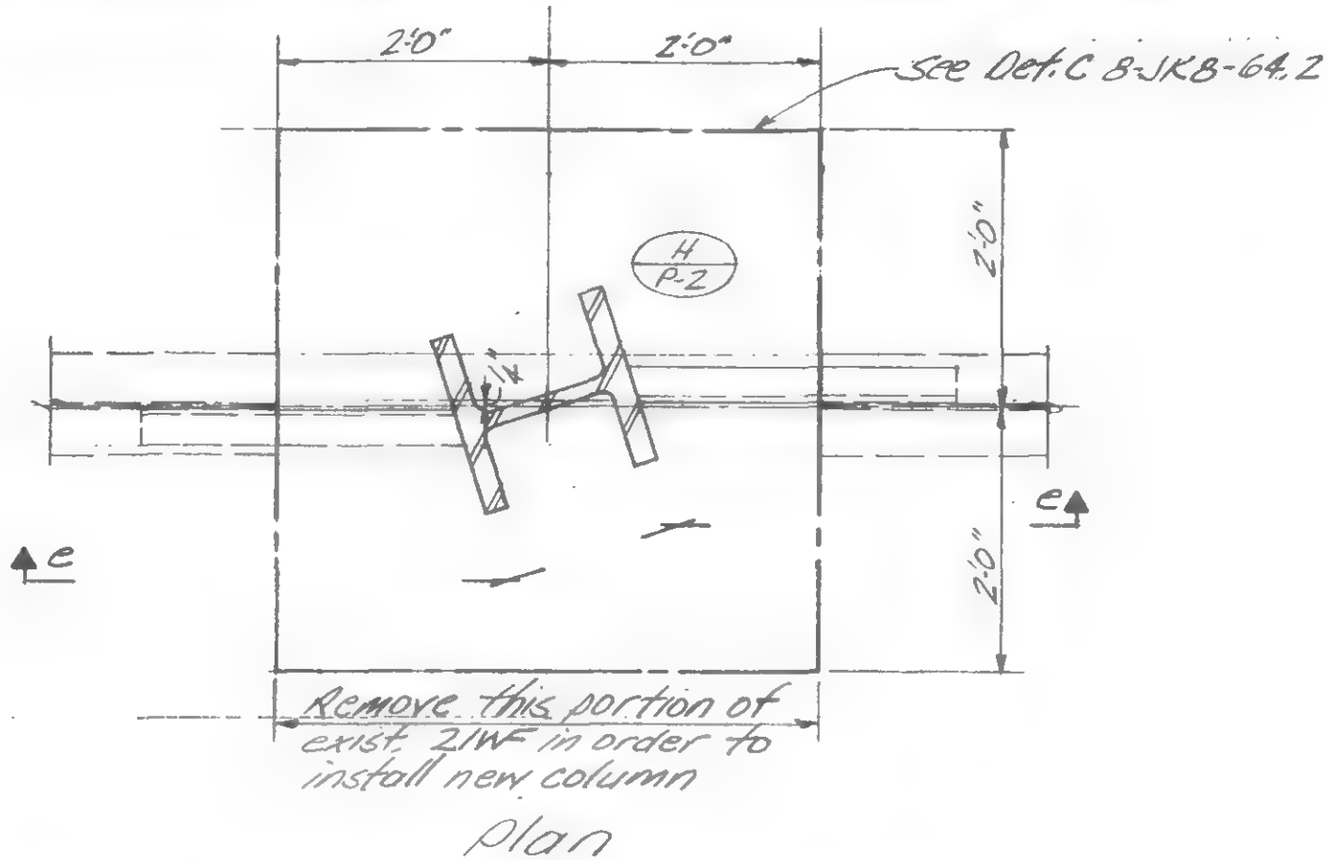


Plan

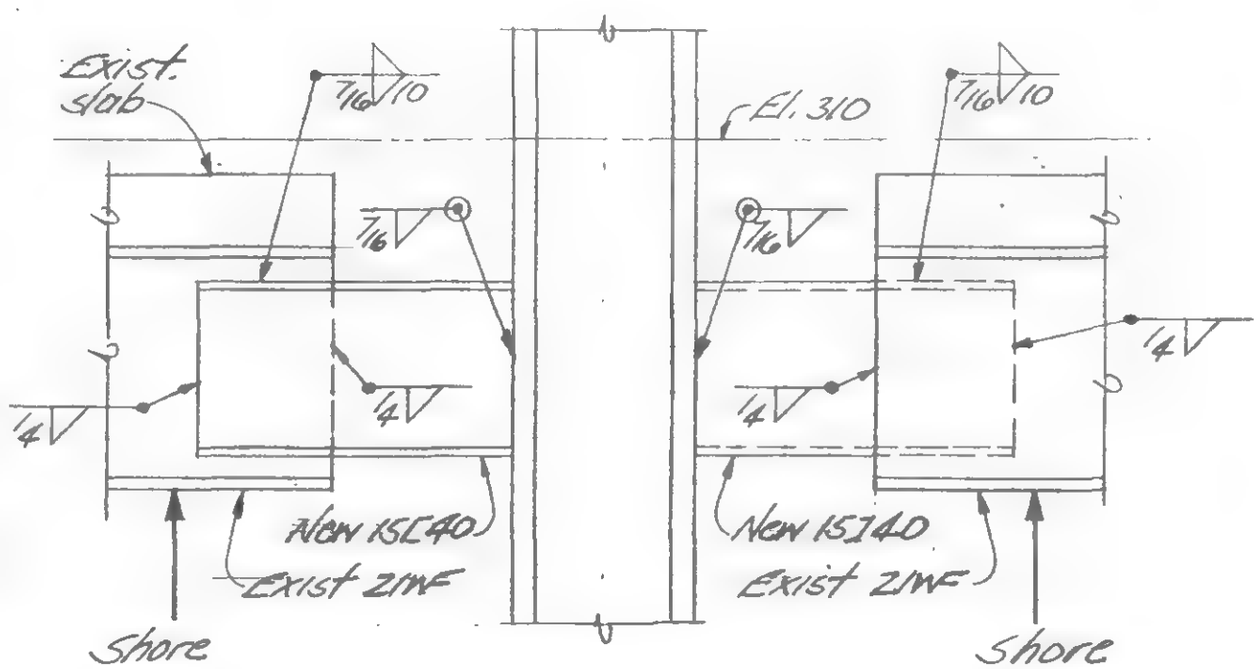


Section e-e

Detail E

LICENSED PROFESSIONAL ENGINEER — LESLIE E. ROBERTSON — No. 34360 — UNIVERSITY OF THE STATE OF NEW YORK

DESIGNED: K. Chiang

DRAWN:

REVIEWED:

19-K-1052.2

SKILLING, HELLE, CHRISTIANSEN, ROBERTSON — Structural & Civil Engineers

PROJECT: THE WORLD TRADE CENTER

TITLE: REINFORCING PLATES OF EXISTING COLUMNS

DATE: 12-23-71

REVISIONS

## Col. K35-5 & K35-6 - North Face

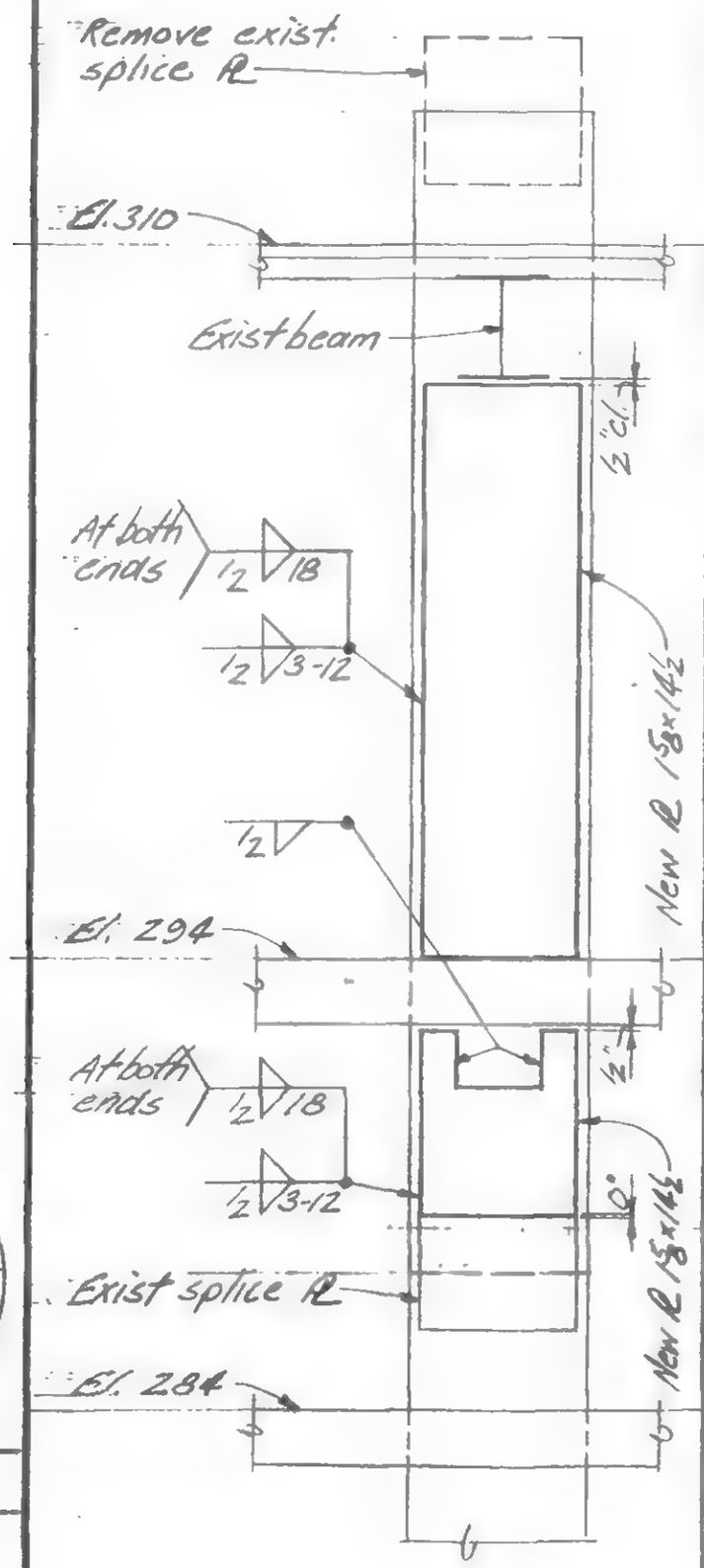


## Col. K35-5 & K35-6 - South Face

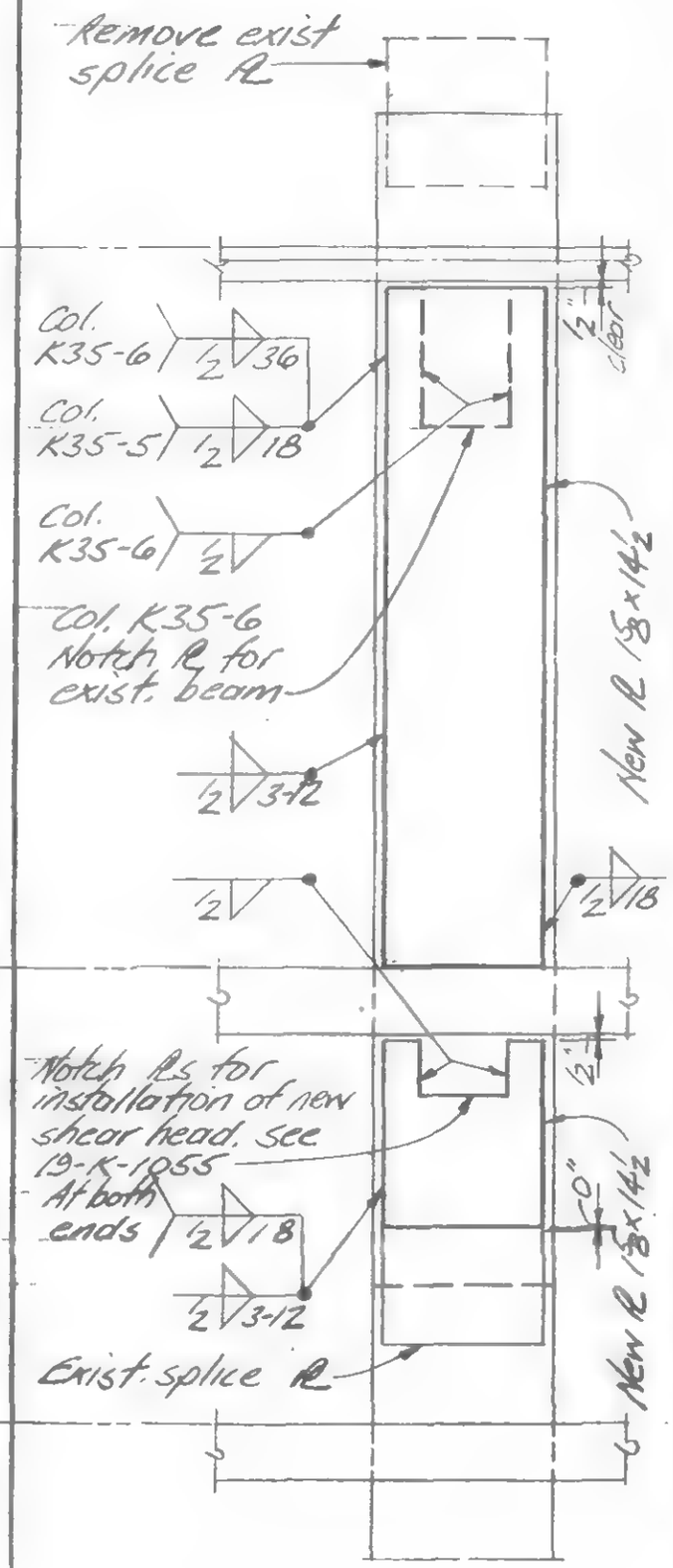


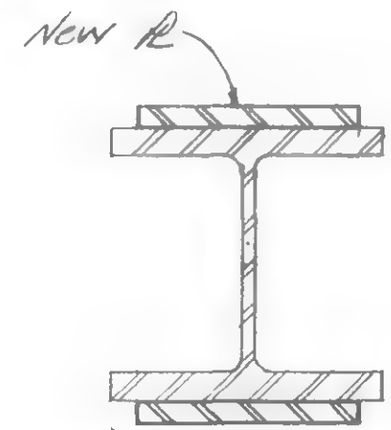


Typical Column Section

Notes:

1. All new cover plates to be Fy36.
2. Field measurement is required to establish the length of all new cover plates.

LICENSED PROFESSIONAL ENGINEER — LESLIE E. ROBERTSON — No. 34360 — UNIVERSITY OF THE STATE OF NEW YORK

DESIGNED: K. Chiang

DRAWN

REVIEWED

19-K-1053.1

SKILLING, HELLE, CHRISTIANSEN, ROBERTSON — Structural & Civil Engineers

PROJECT: THE WORLD TRADE CENTER | TITLE: REINFORCING PLATES OF EXISTING COLUMNS | DATE: 12-23-71

REVISIONS

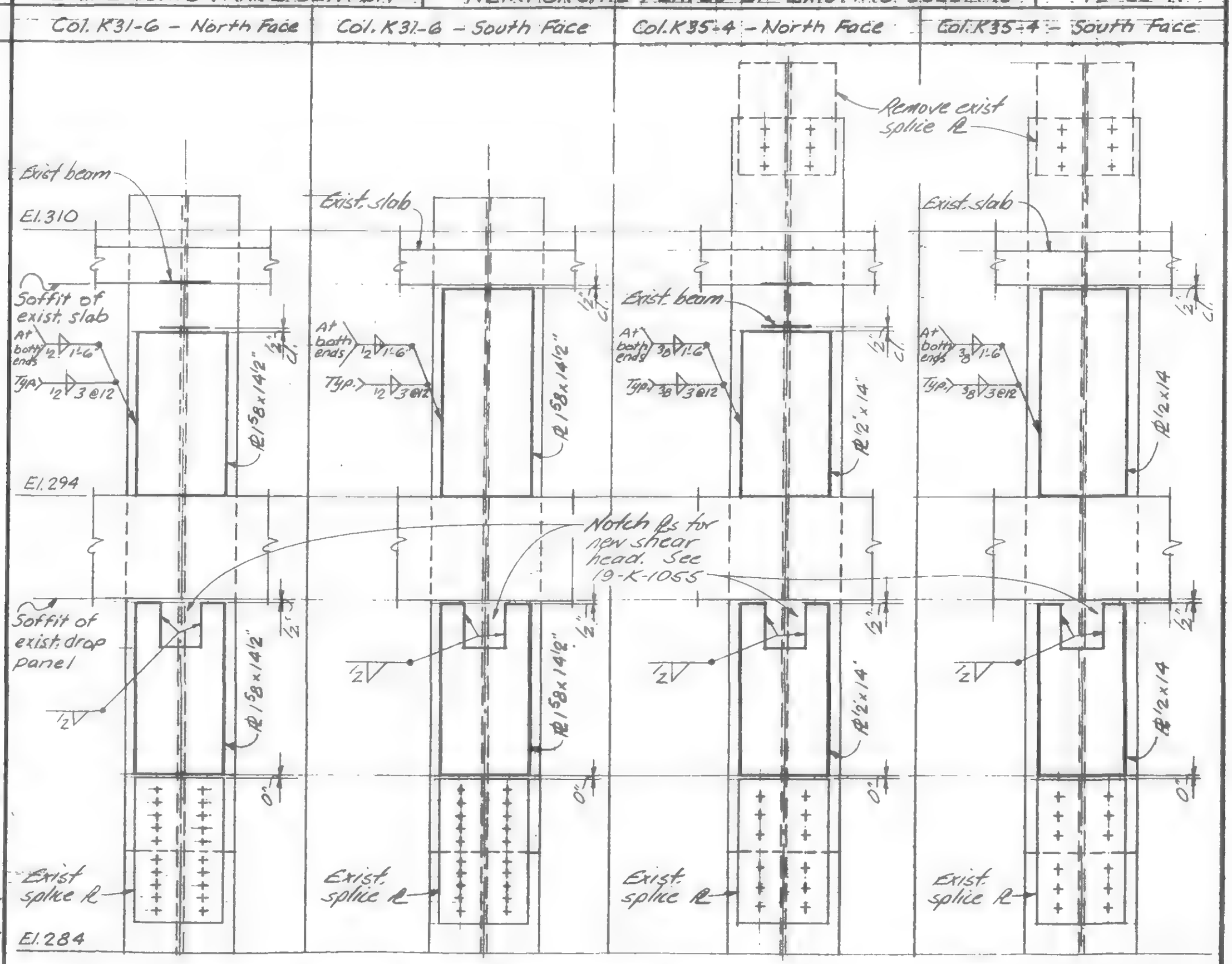


Note: See typical column section and notes in 19-K-1053.1

19-K-1053.2

LICENSED PROFESSIONAL ENGINEER — LESLIE E. ROBERTSON — No 34960 — UNIVERSITY OF THE STATE OF NEW YORK

DESIGNED K. CHIANG

DRAWN A. FRANQUI

REVIEWED WAB

SKILLING, HELLE, CHRISTIANSEN, ROBERTSON — Structural & Civil Engineers

PROJECT: THE WORLD TRADE CENTER | TITLE: REINFORCING PLATES OF EXISTING COLUMNS | DATE: 12-23-71

REVISIONS

Col. $\frac{K41}{10}$ North & South Face

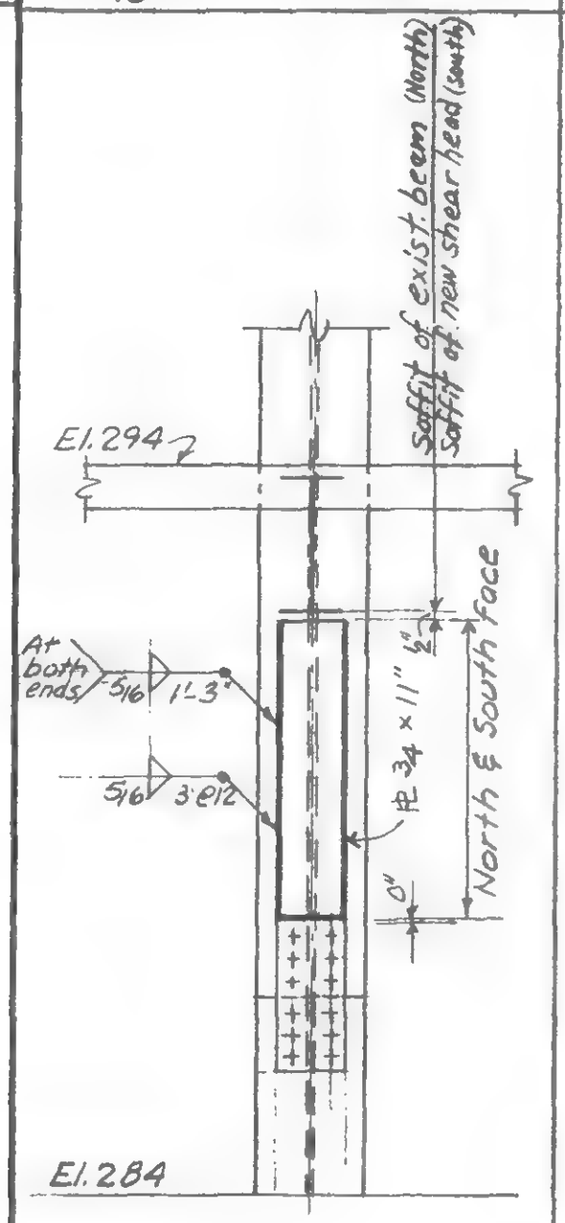


See 19-K-1053.1 for typ. section and notes.

LICENSED PROFESSIONAL ENGINEER
LESLIE E. ROBERTSON
No. 34960
UNIVERSITY OF THE STATE OF NEW YORK

DESIGNED: CHIANG

DRAWN: A. FRANQUI

REVIEWED

19-K-1053.3

SKILLING, HELLE, CHRISTIANSEN, ROBERTSON — Structural & Civil Engineers

PROJECT: THE WORLD TRADE CENTER | TITLE: BASE PLATE REPAIR | DATE: 2-15-72

REVISIONS

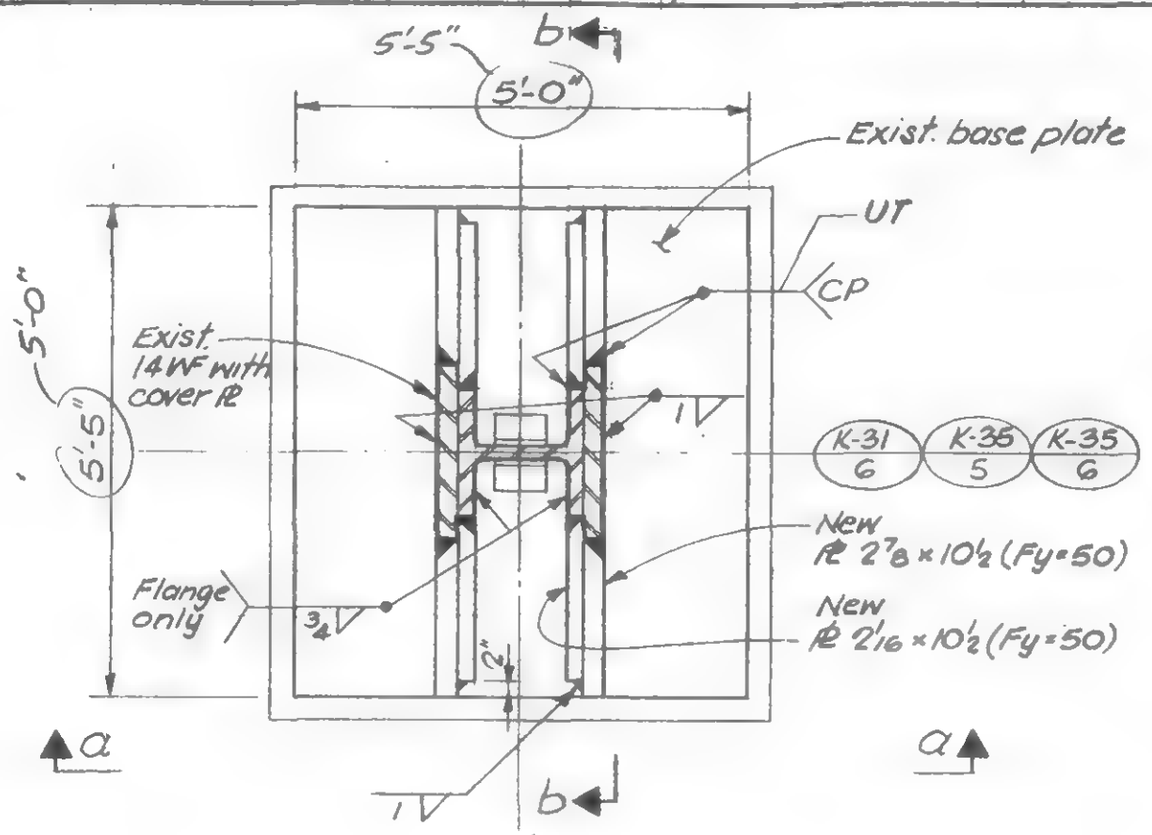


Plan

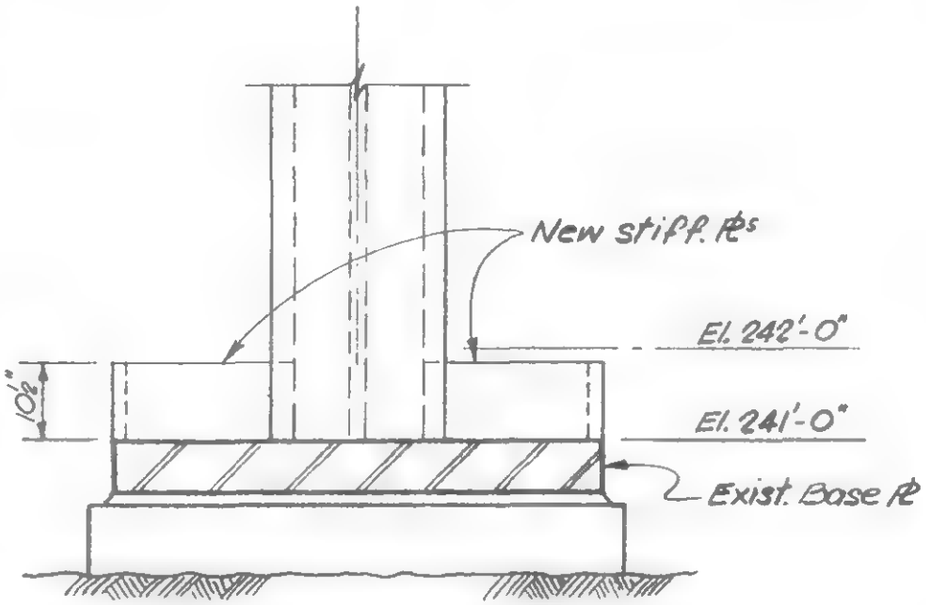


Section b-b

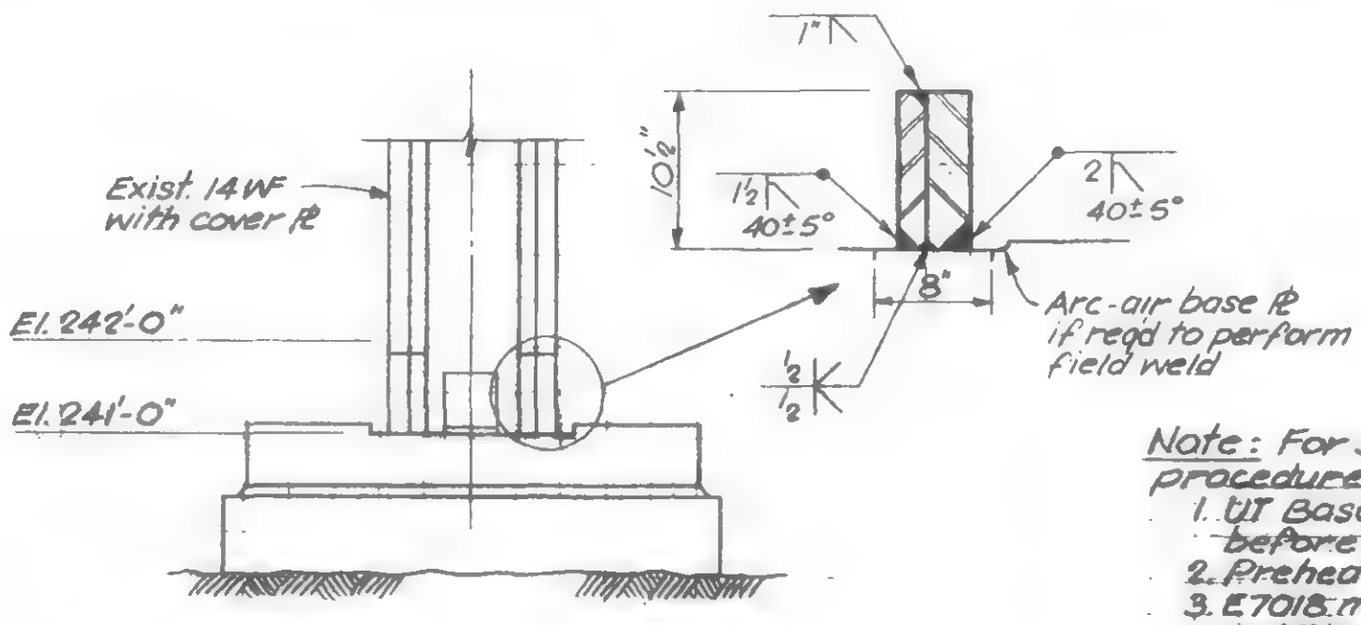


Section a-a

Note: For stiffener to base plate, welding procedure shall include the following:

1. UT Base PL. 4 locations (8"×21") 100% before welding.
2. Preheat (soak) 250°F minimum preheat.
3. E7018 manual or Fabshield semiautomatic welding.
4. Postheat 200°F for 18-24 hours, slow cool.
5. UT welds after cooling.

LICENSED PROFESSIONAL ENGINEER — LESLIE E. ROBERTSON — No. 34360 — UNIVERSITY OF THE STATE OF NEW YORK

DESIGNED: D.S.

DRAWN: S.C.

REVIEWED: L E Robertson

19-K-1054

SKILLING, HELLE, CHRISTIANSEN, ROBERTSON — Structural & Civil Engineers

PROJECT: THE WORLD TRADE CENTER | TITLE: SHEAR HEAD REPAIR - CINCH ANCHORS | DATE: 6-30-72

REVISIONS

10-5-72

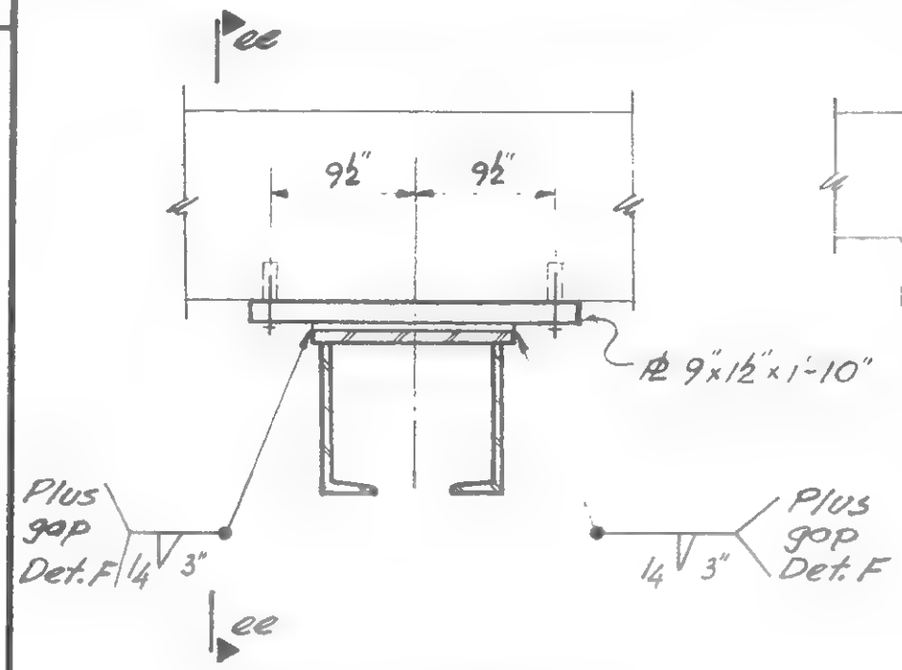


Section e-e
19-K-1055.2

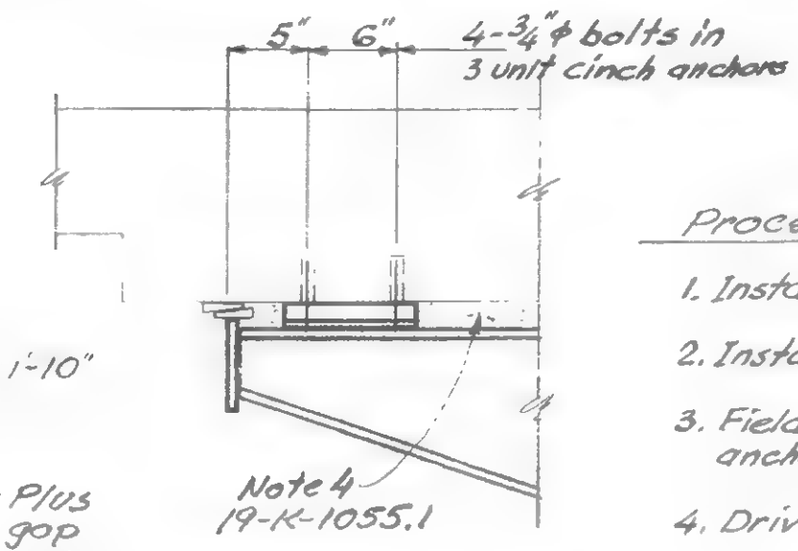


Section ee-ee

## Procedure

1. Install Steel Shear head repair
2. Install Cinch anchors
3. Field measure as installed cinch anchor locations & drill holes in 1½" PL
4. Drive steel wedges.
5. Tighten bolts to bring plate snug with concrete.
6. Pack space between 1½" PL and top flange shear head repair.
7. Weld to shear head repair

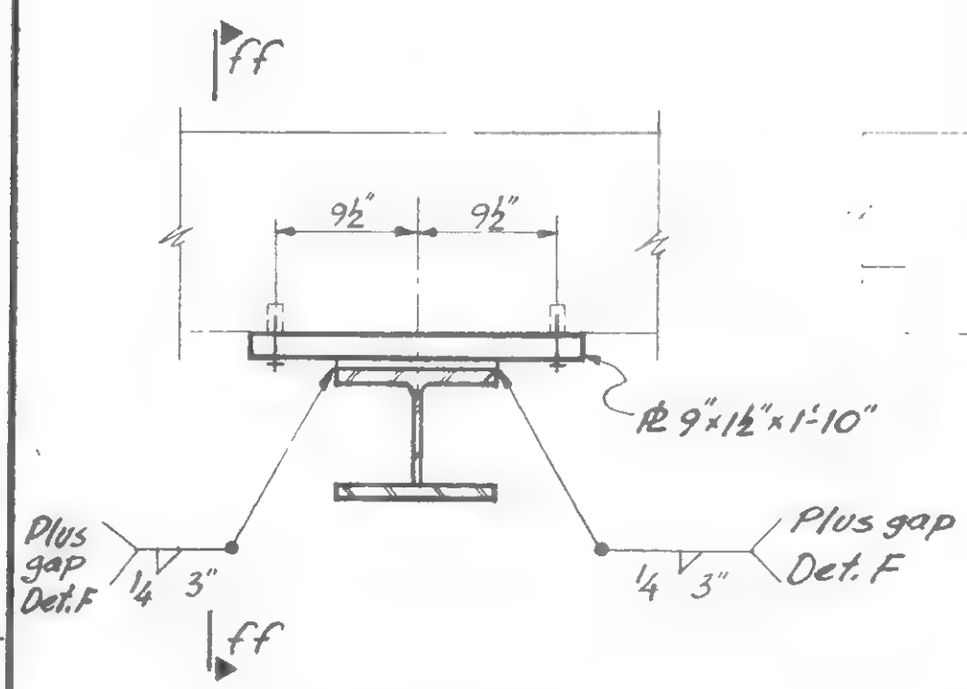


Section f-f
19-K-1055.2

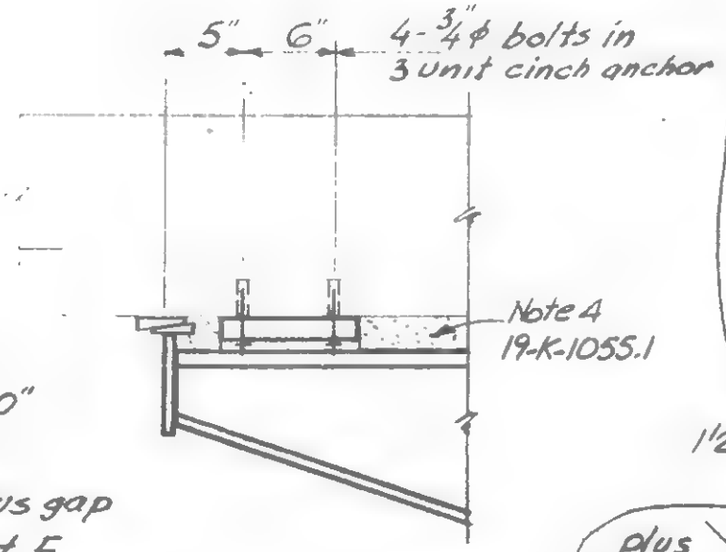


Section ff-ff

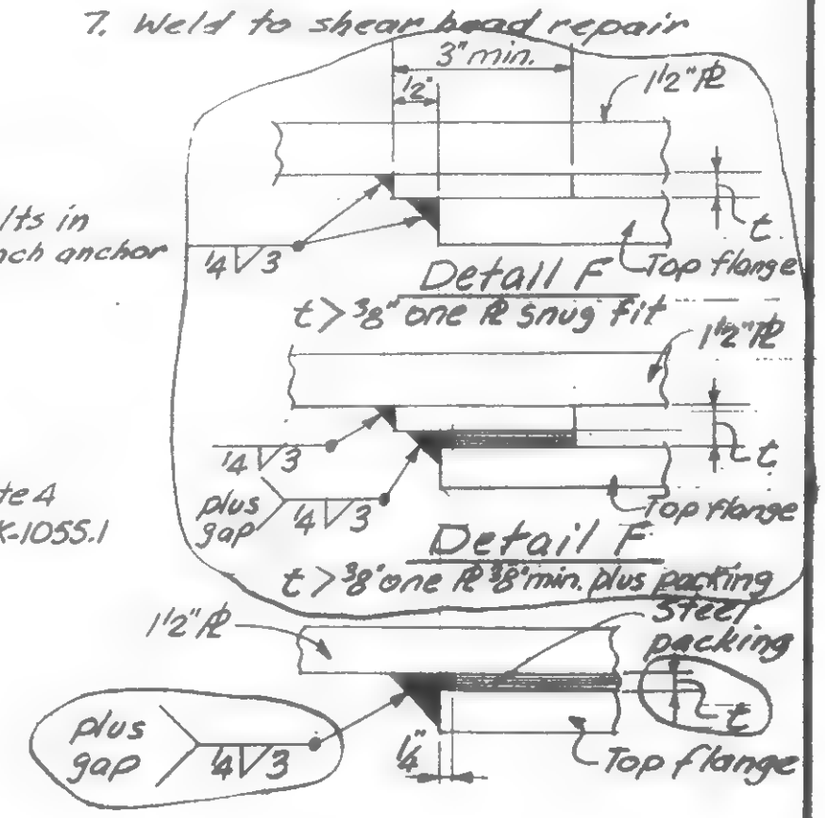


Detail F
t < ⅜"

DESIGNED

DRAWN J G

REVIEWED

LICENSED PROFESSIONAL ENGINEER LESLIE E. ROBERTSON No 34360 UNIVERSITY OF THE STATE OF NEW YORK

19-K-1055.3

SKILLING, HELLE, CHRISTIANSEN, ROBERTSON — Structural & Civil Engineers

PROJECT: THE WORLD TRADE CENTER | TITLE: DETAIL ~~FOR SHEAR HEAD~~ REPAIR | DATE: 12-23-71

REVISIONS

1-15-72 Gen. Rev.

6-30-72

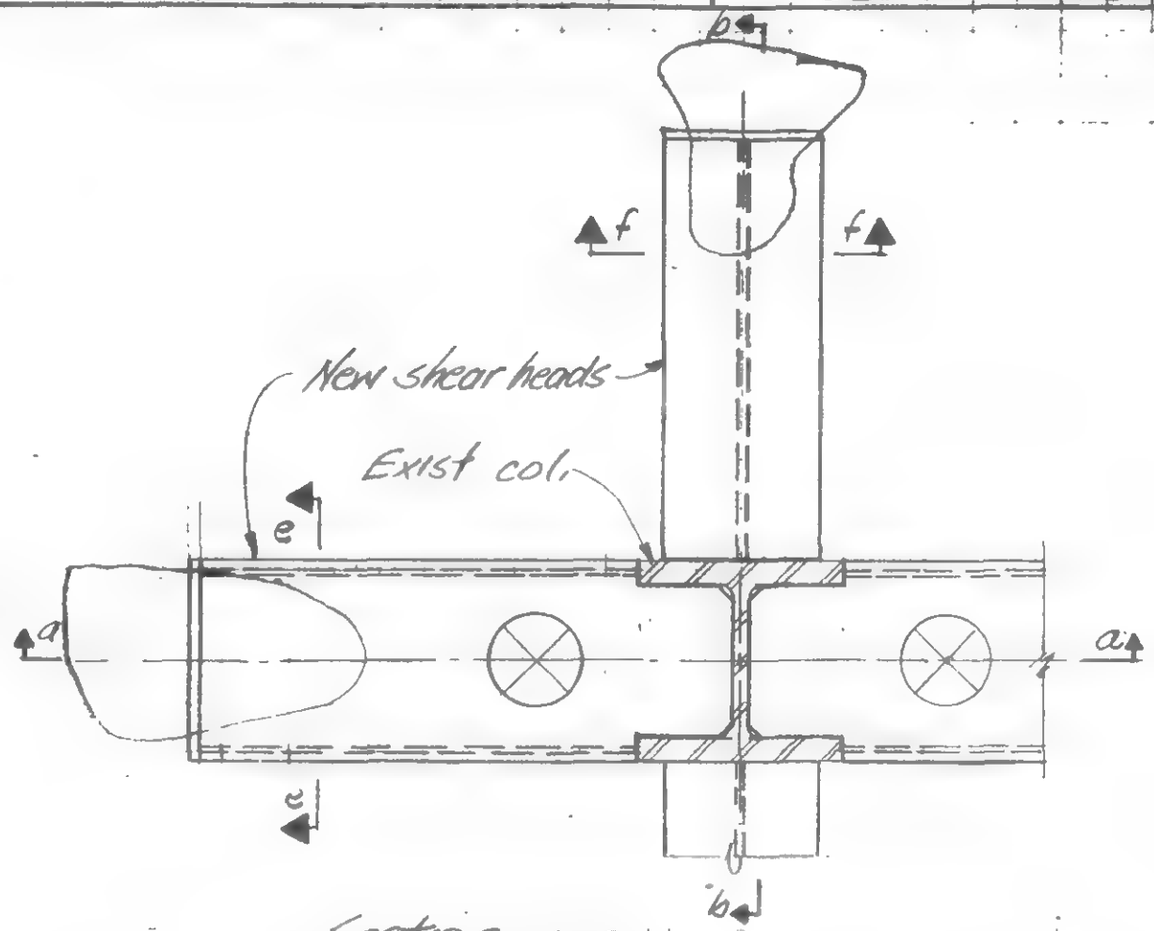


Section c-c

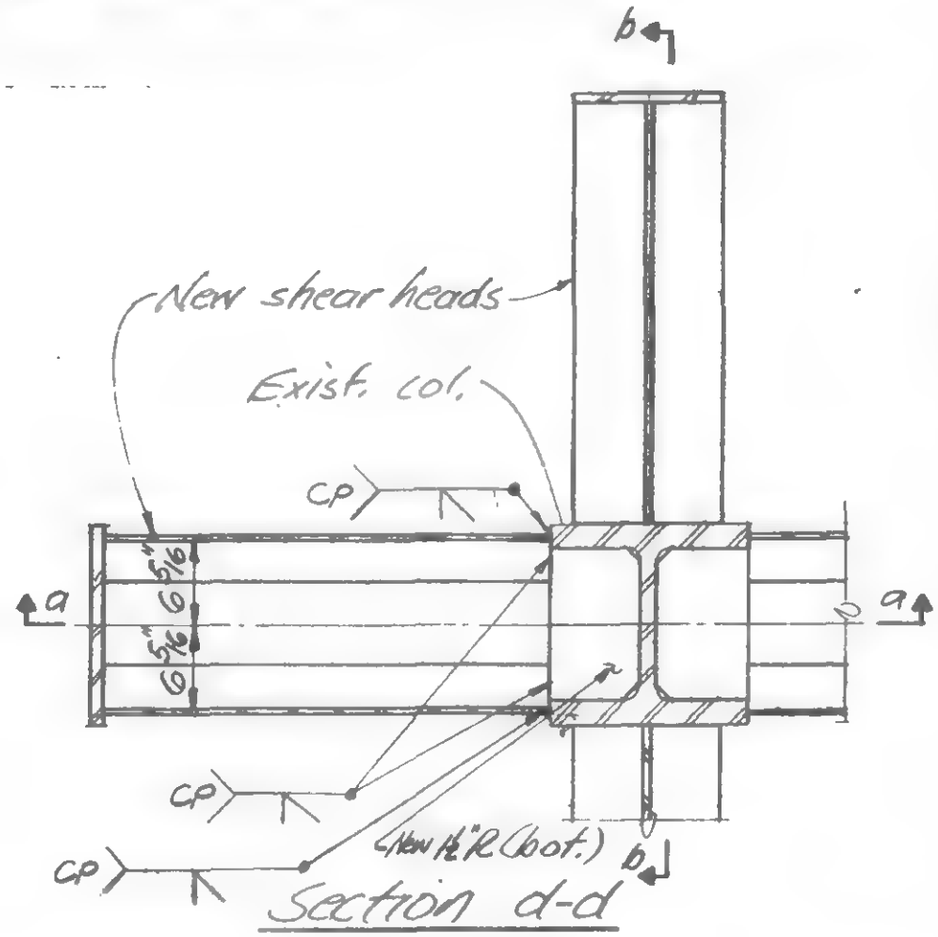


Section d-d

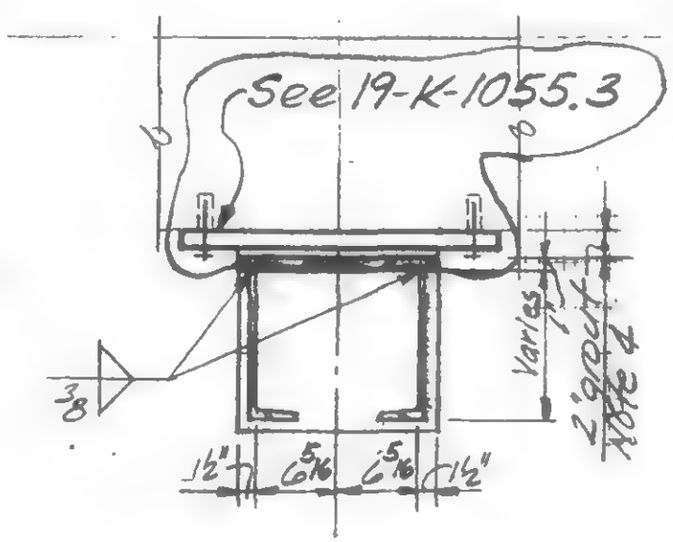


Section e-e

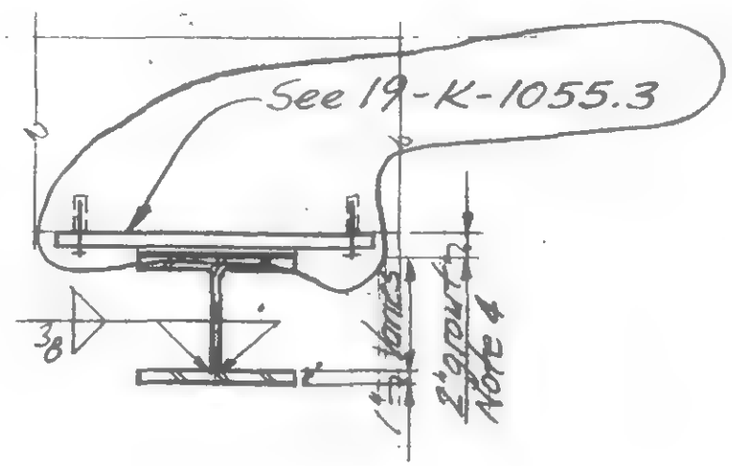


Section f-f

DESIGNED

DRAWN

REVIEWED

19-K-1055.2

SKILLING, HELLE, CHRISTIANSEN, ROBERTSON — Structural & Civil Engineers

PROJECT: THE WORLD TRADE CENTER | TITLE: DETAIL FOR SHEAR HEAD REPAIR | DATE: 12-23-71

REVISIONS

1-15-72 Gen. Rev.

6-30-72

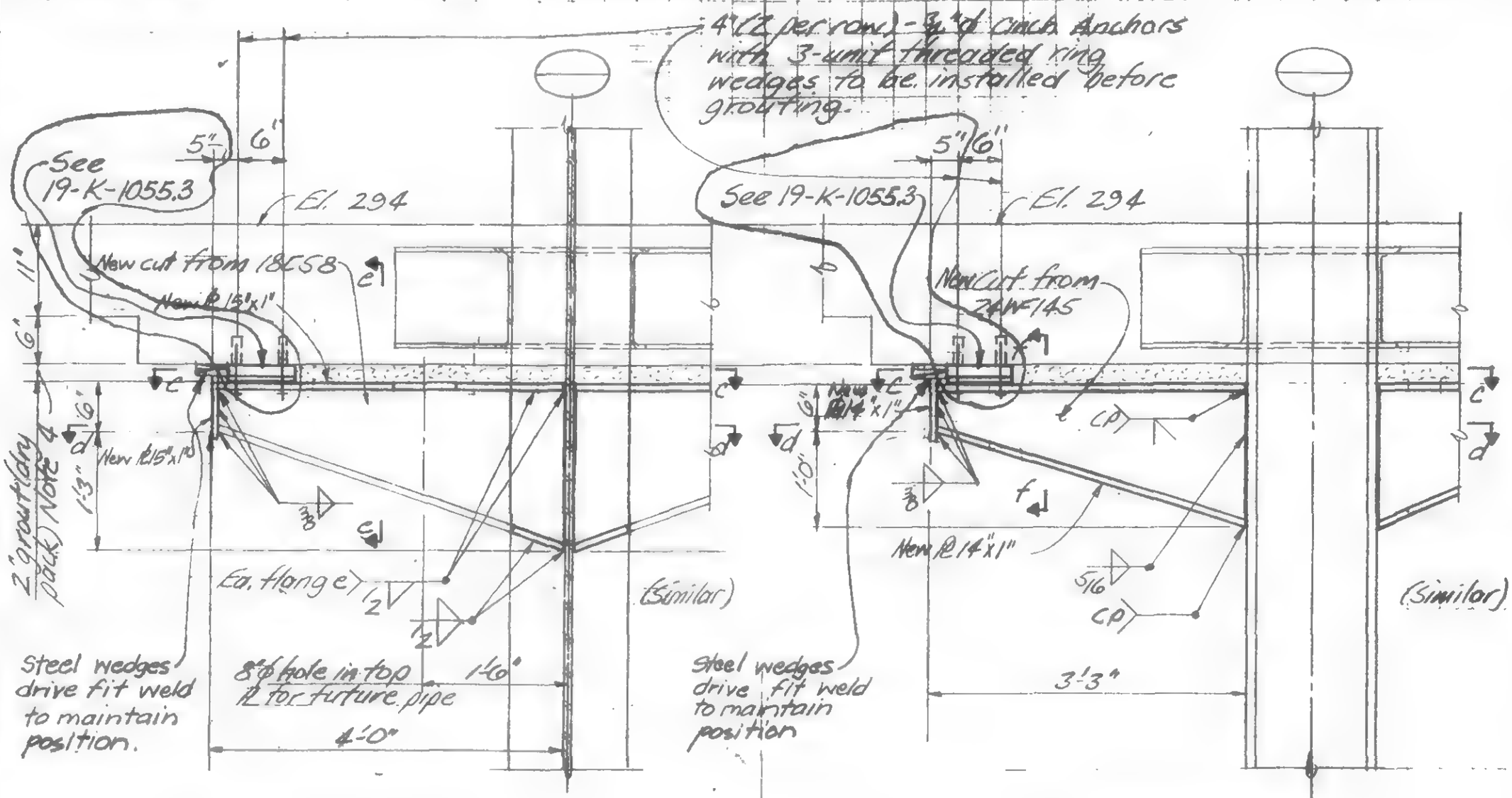


Section a-a

Section b-b

Notes:

1. All material to be fabricated from field measured dimensions.
2. All new steel to be Fy36
3. All electrodes to be E70XX
4. Grout to achieve 100% contact between plates and existing drop panel. Grout to be premixed Embeco grout mixed to flowable consistency and placed in conformance with manufactures written directions
5. Provide erection aides as required

DESIGNED

DRAWN

REVIEWED

19-K-1055.1

SKILLING, HELLE, CHRISTIANSEN, ROBERTSON — Structural & Civil Engineers

PROJECT: THE WORLD TRADE CENTER | TITLE: DETAIL FOR SHEAR HEAD REPAIR K43/7 & K43/8 | DATE: 12-23-71

REVISIONS

1-14-72 Gen. Rev.

6-30-72

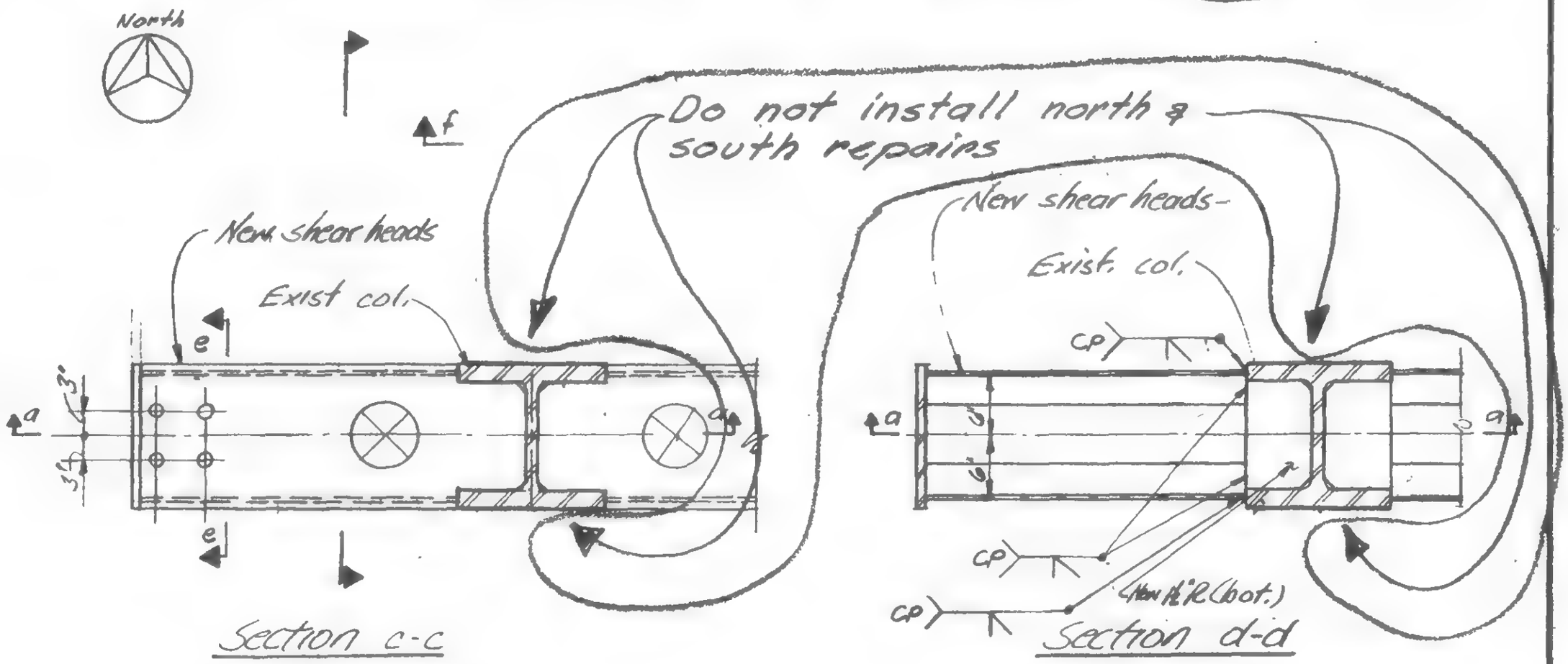


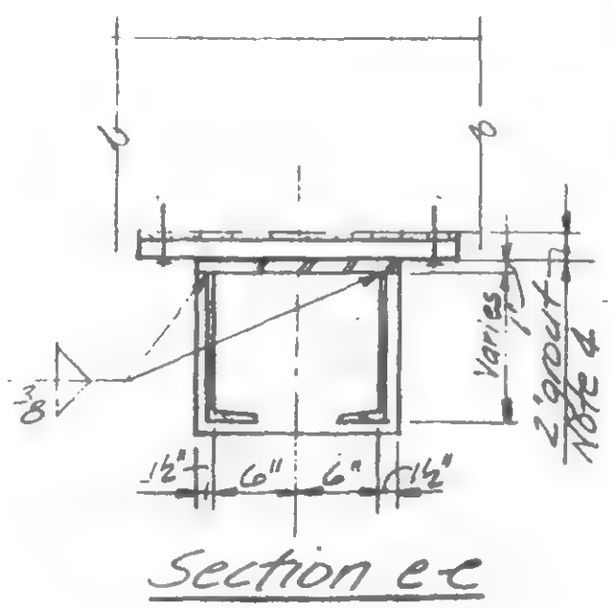

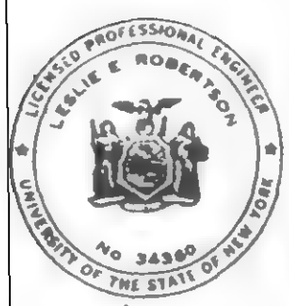


SIGNED

DRAWN

REVIEWED

K43/7 & K43/8

19-K-1056.2

SKILLING, HELLE, CHRISTIANSEN, ROBERTSON · Structural & Civil Engineers

PROJECT: THE WORLD TRADE CENTER | TITLE: DETAIL FOR SHEAR HEAD REPAIR K43/7 & K43/8 | DATE: 12-23-71

REVISIONS

1-15-72 Gen. Rev.

6-30-72

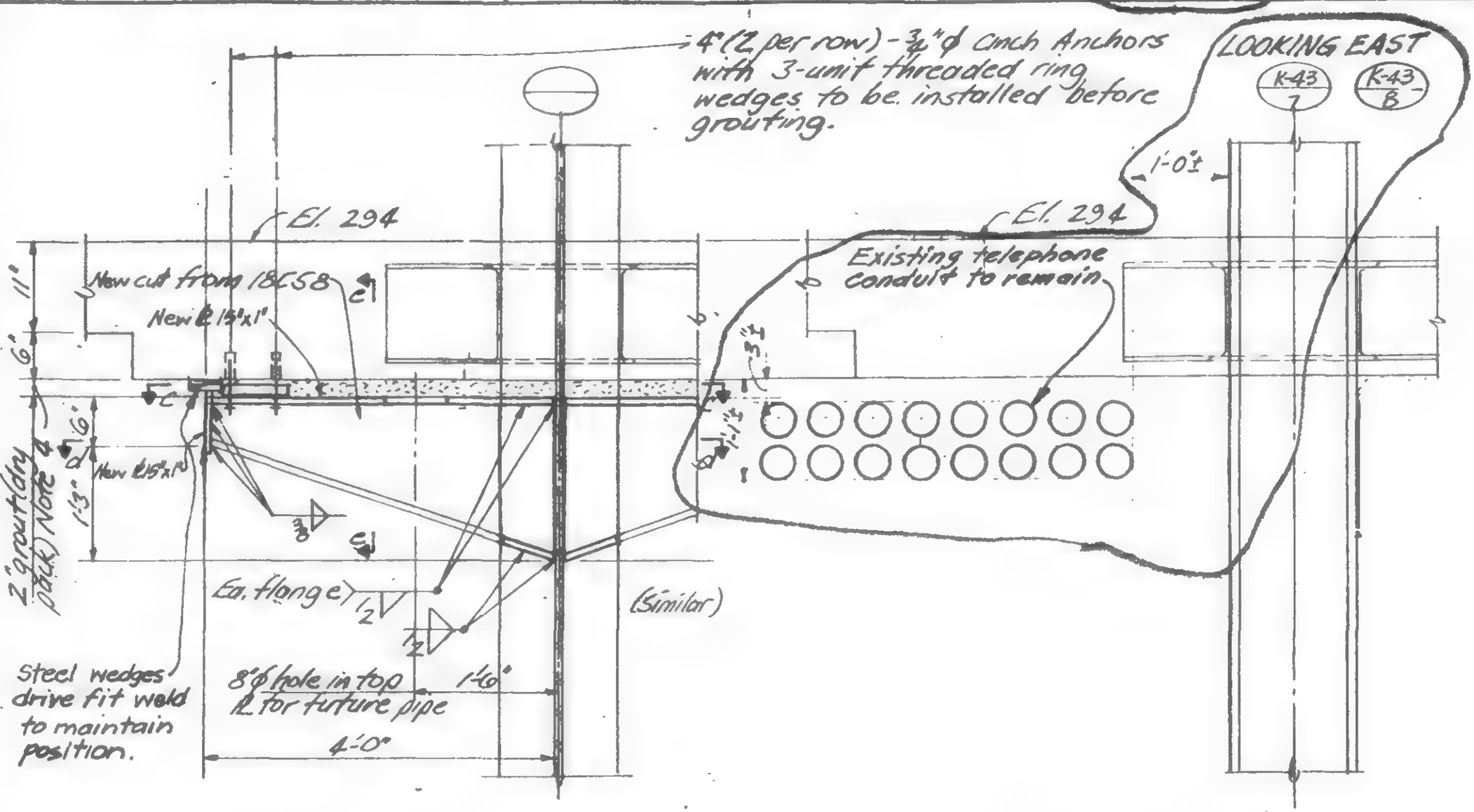


Section a-a

Section b-b

Notes:

1. All material to be fabricated from field measured dimensions.
2. All new steel to be Fy36
3. All electrodes to be E70XX
4. Grout to achieve 100% contact between plates and existing drop panel. Grout to be premixed Embeco grout mixed to flowable consistency and placed in conformance with manufactures written directions
5. Provide erection aides as required.

LICENSED PROFESSIONAL ENGINEER · LESLIE E. ROBERTSON · No. 34360 · UNIVERSITY OF THE STATE OF NEW YORK

DESIGNED

DRAWN

REVIEWED

K43/7 & K43/8

19-K-1055.1

SKILLING, HELLE, CHRISTIANSEN, ROBERTSON — Structural & Civil Engineers

PROJECT: THE WORLD TRADE CENTER | TITLE: DETAIL FOR SHEAR HEAD REPAIR K41/8 | DATE: 12-23-71

REVISIONS
1-15-72 Gen. Rev.
6-30-72

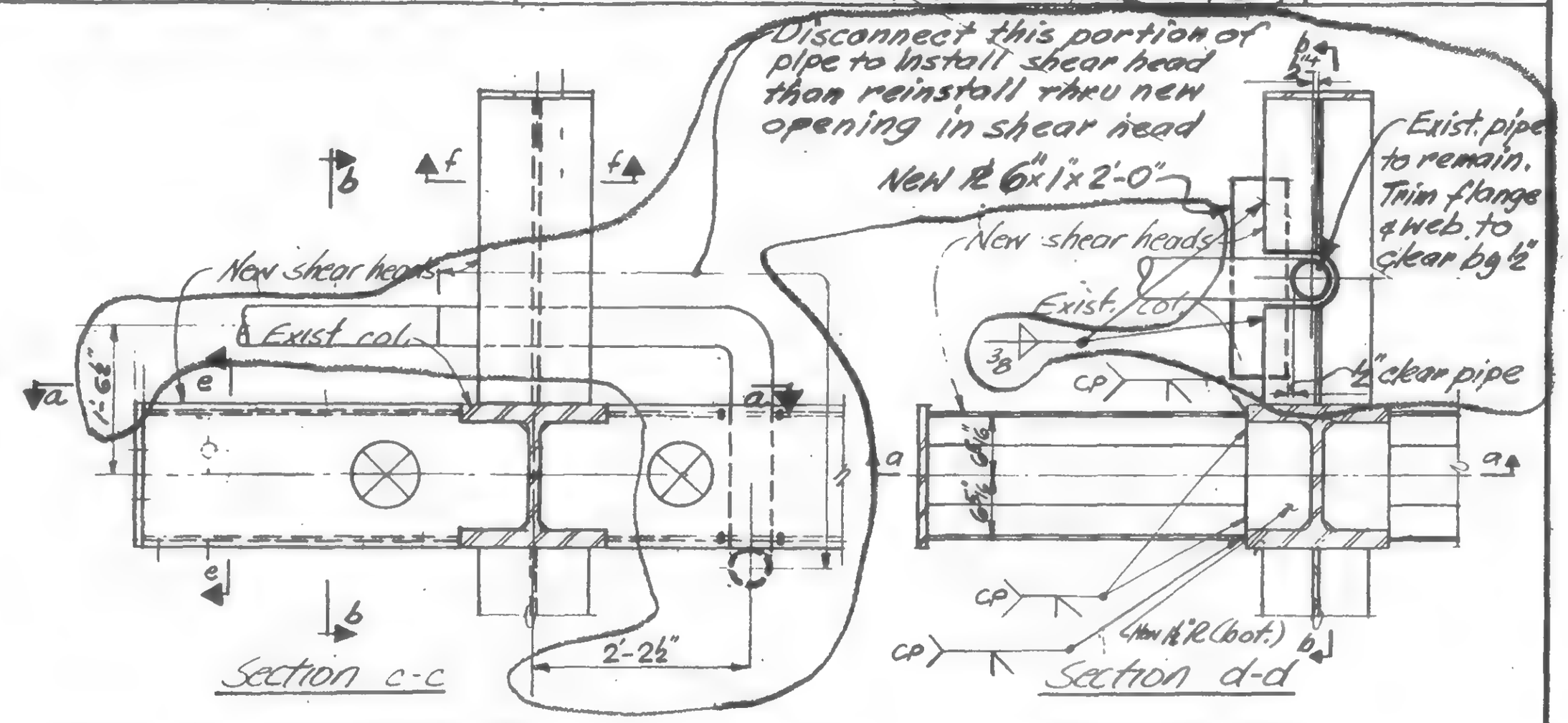


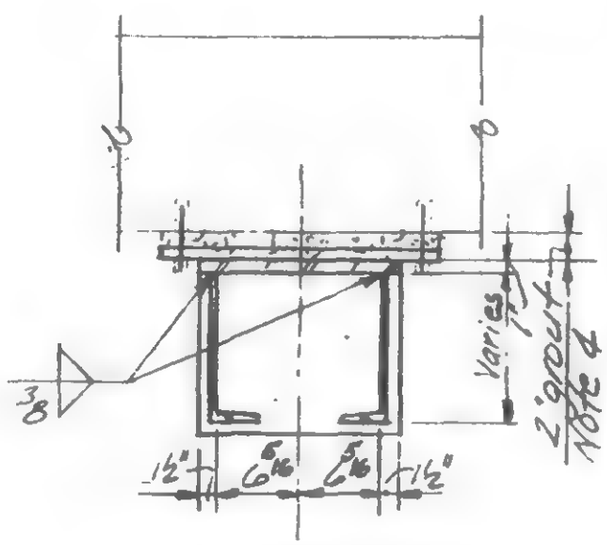


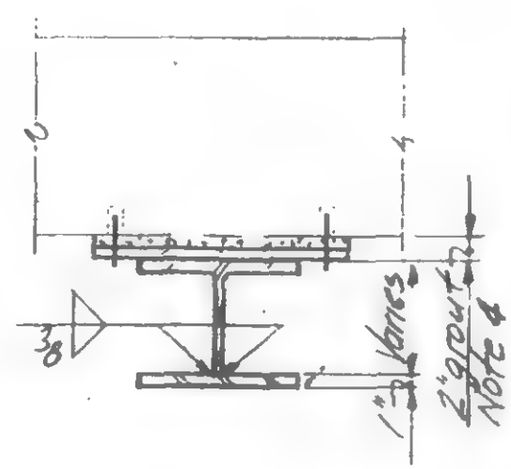


LICENSED PROFESSIONAL ENGINEER — LESLIE E. ROBERTSON — No 34380 — UNIVERSITY OF THE STATE OF NEW YORK

DESIGNED
DRAWN
REVIEWED

K41/8
19-K-1055.2

SKILLING, HELLE, CHRISTIANSEN, ROBERTSON · Structural & Civil Engineers

PROJECT: THE WORLD TRADE CENTER | TITLE: DETAIL FOR SHEAR HEAD REPAIR K41/8 | DATE: 12-23-71

REVISIONS

1-15-72 Gen. Rev.

6-30-72 R

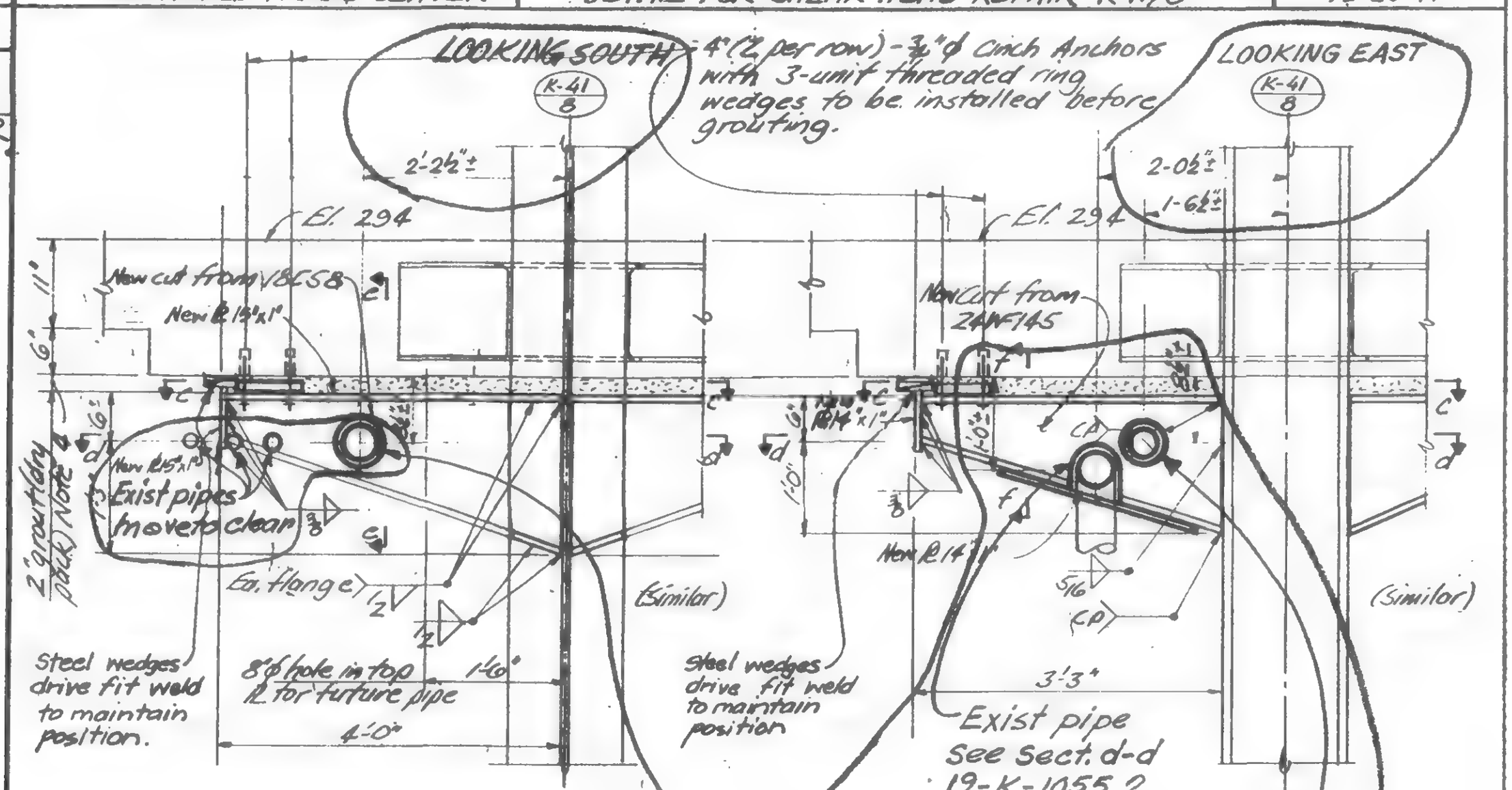


Notes:

1. All material to be fabricated from field measured dimensions.
2. All new steel to be Fy36
3. All electrodes to be E70XX
4. Grout to achieve 100% contact between plates and existing drop panel. Grout to be premixed Embeco grout mixed to flowable consistency and placed in conformance with manufactures written directions
5. Provide erection aides as required

LICENSED PROFESSIONAL ENGINEER LESLIE E. ROBERTSON No 24360 UNIVERSITY OF THE STATE OF NEW YORK

SIGNED

DRAWN

REVIEWED

K41/8

19-K-1055.1

SKILLING, HELLE, CHRISTIANSEN, ROBERTSON — Structural & Civil Engineers

PROJECT: THE WORLD TRADE CENTER | TITLE: DETAIL FOR SHEAR HEAD REPAIR K37/9 & K41/9 | DATE: 12-23-71

REVISIONS

1-15-72 Gen. Rev.

6-30-72

8-31-72

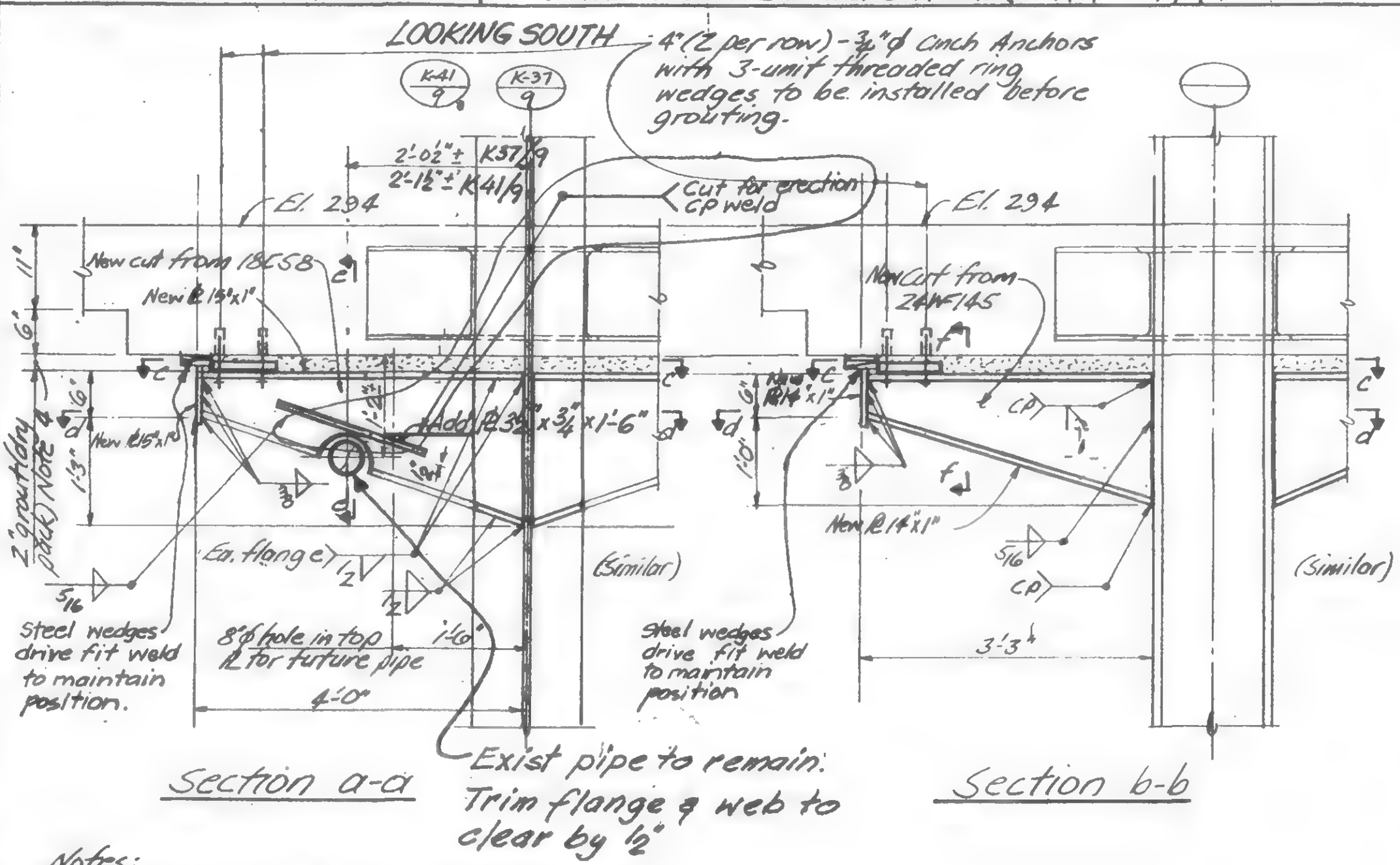


Notes:

1. All material to be fabricated from field measured dimensions.
2. All new steel to be Fy36.
3. All electrodes to be E70XX
4. Grout to achieve 100% contact between plates and existing drop panel. Grout to be premixed Embeco grout mixed to flowable consistency and placed in conformance with manufactures written directions
5. Provide erection aides as required

LICENSED PROFESSIONAL ENGINEER — LESLIE E. ROBERTSON — No 34380 — UNIVERSITY OF THE STATE OF NEW YORK

DESIGNED

DRAWN

REVIEWED

∴ K37/9 & K41/9

19-K-1055.1

SKILLING, HELLE, CHRISTIANSEN, ROBERTSON — Structural & Civil Engineers

PROJECT: THE WORLD TRADE CENTER | TITLE: DETAIL FOR SHEAR HEAD REPAIR - K37/2 | DATE: 12-23-71

REVISIONS

1-15-72 Gen. Rev.

6-30-72

5-4-73

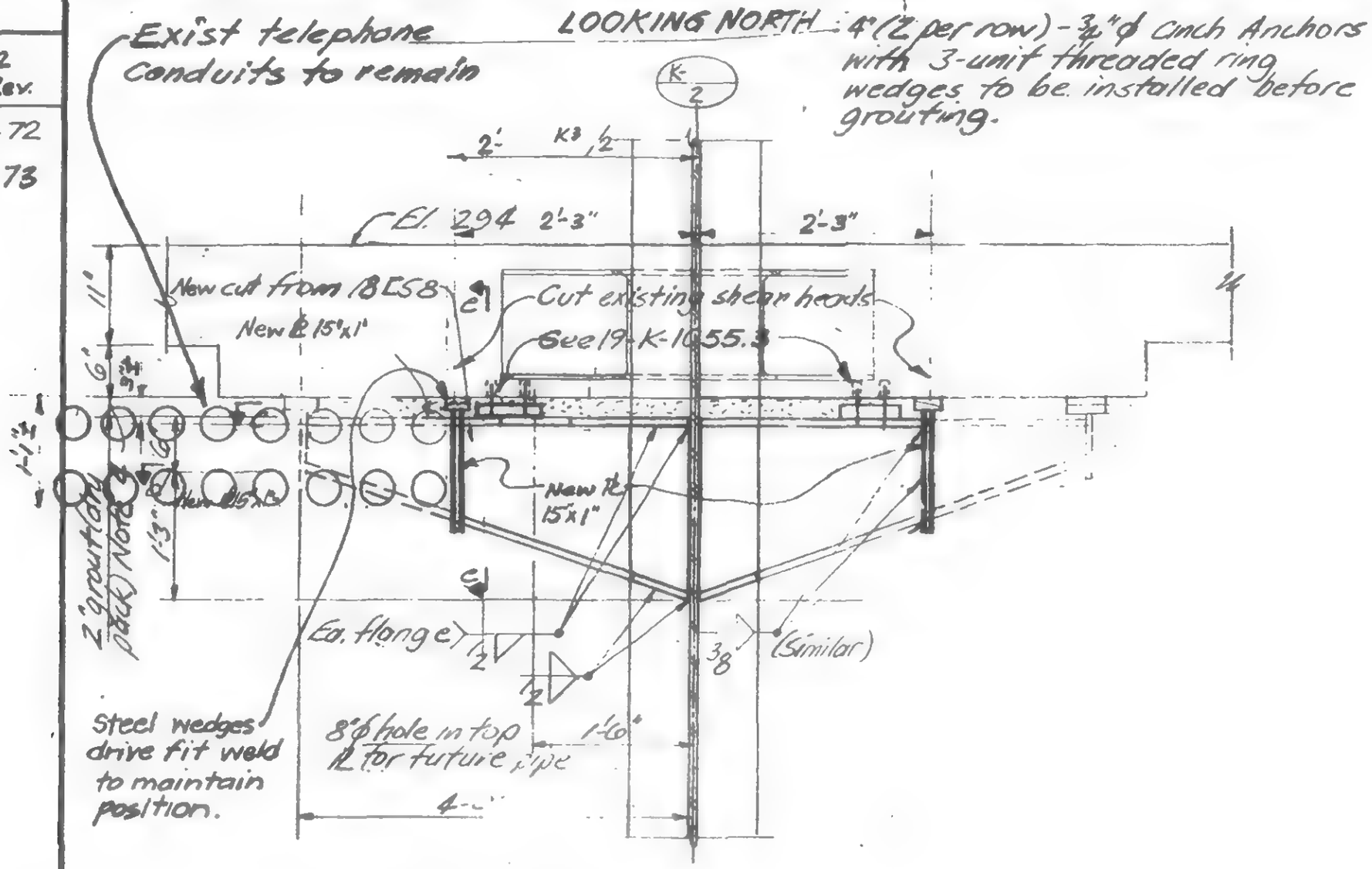


Section a-a

Notes:

1. All material to be fabricated from field measured dimensions.
2. All new steel to be Fy36
3. All electrodes to be E70XX
4. Grout to achieve 100% contact between plates and existing drop panel. Grout to be premixed Embeco grout mixed to flowable consistency and placed in conformance with manufactures written directions
5. Provide erection aides as required

LICENSED PROFESSIONAL ENGINEER — LESLIE E. ROBERTSON — No. 34390 — UNIVERSITY OF THE STATE OF NEW YORK

DESIGNED

DRAWN

REVIEWED

K37/2

19-K-1055.1

SKILLING, HELLE, CHRISTIANSEN, ROBERTSON — Structural & Civil Engineers

PROJECT: THE WORLD TRADE CENTER | TITLE: DETAIL FOR SHEAR HEAD REPAIR K35/10 | DATE: 12-23-71

REVISIONS
1-15-72 Gen. Rev.
6-30-72
8-31-72

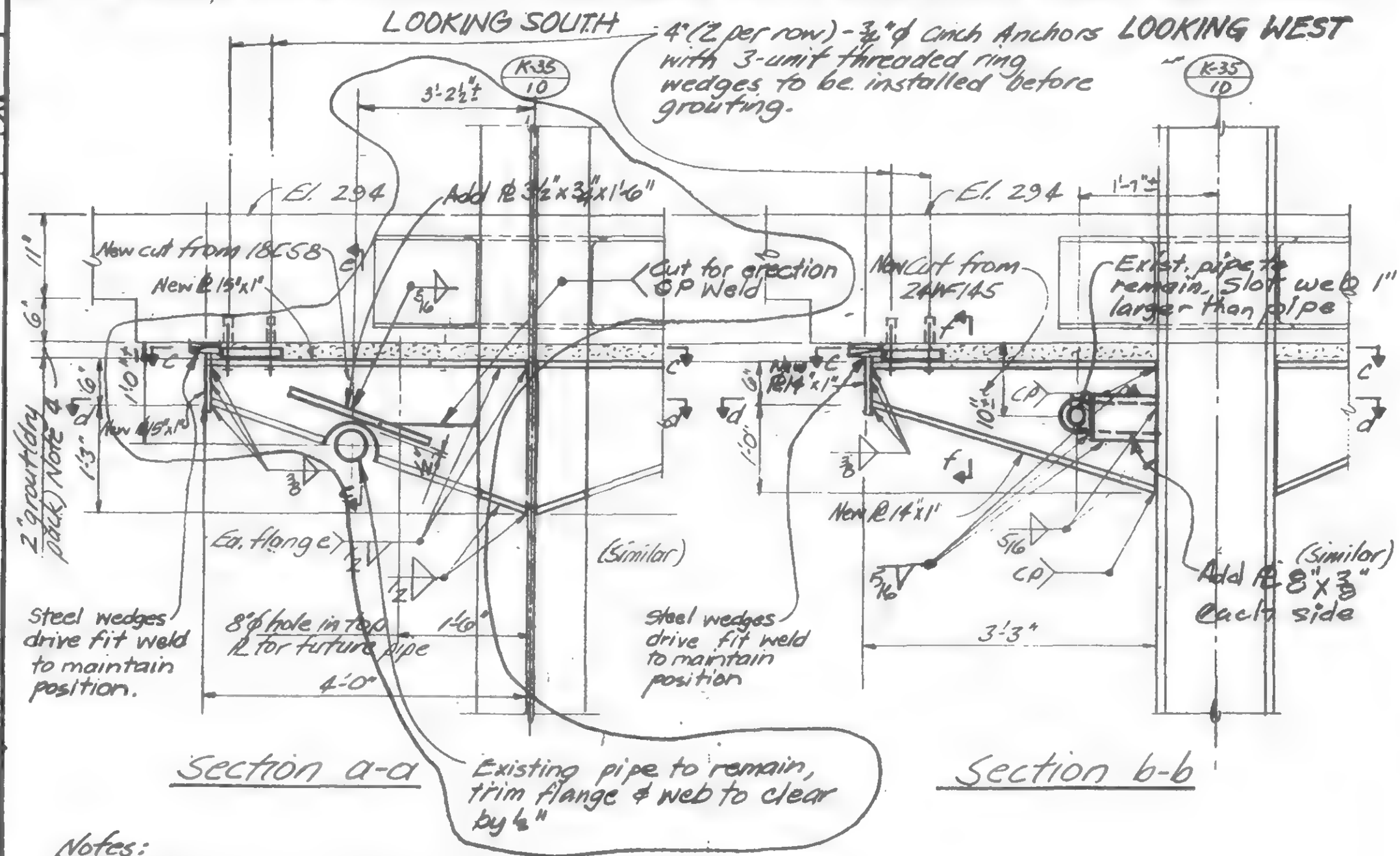


Notes:
1. All material to be fabricated from field measured dimensions.
2. All new steel to be Fy36
3. All electrodes to be E70XX
4. Grout to achieve 100% contact between plates and existing drop panel. Grout to be premixed Embeco grout mixed to flowable consistency and placed in conformance with manufactures written directions
5. Provide erection aides as required

LICENSED PROFESSIONAL ENGINEER — LESLIE E. ROBERTSON — No 34360 — UNIVERSITY OF THE STATE OF NEW YORK

DESIGNED
DRAWN
REVIEWED

K35/10
19-K-1055.1

SKILLING, HELLE, CHRISTIANSEN, ROBERTSON — Structural & Civil Engineers

PROJECT: THE WORLD TRADE CENTER | TITLE: DETAIL FOR SHEAR HEAD REPAIR K35/9 | DATE: 12-23-71

REVISIONS
1-13-72 Gen. Rev.
6-30-72
8-31-72

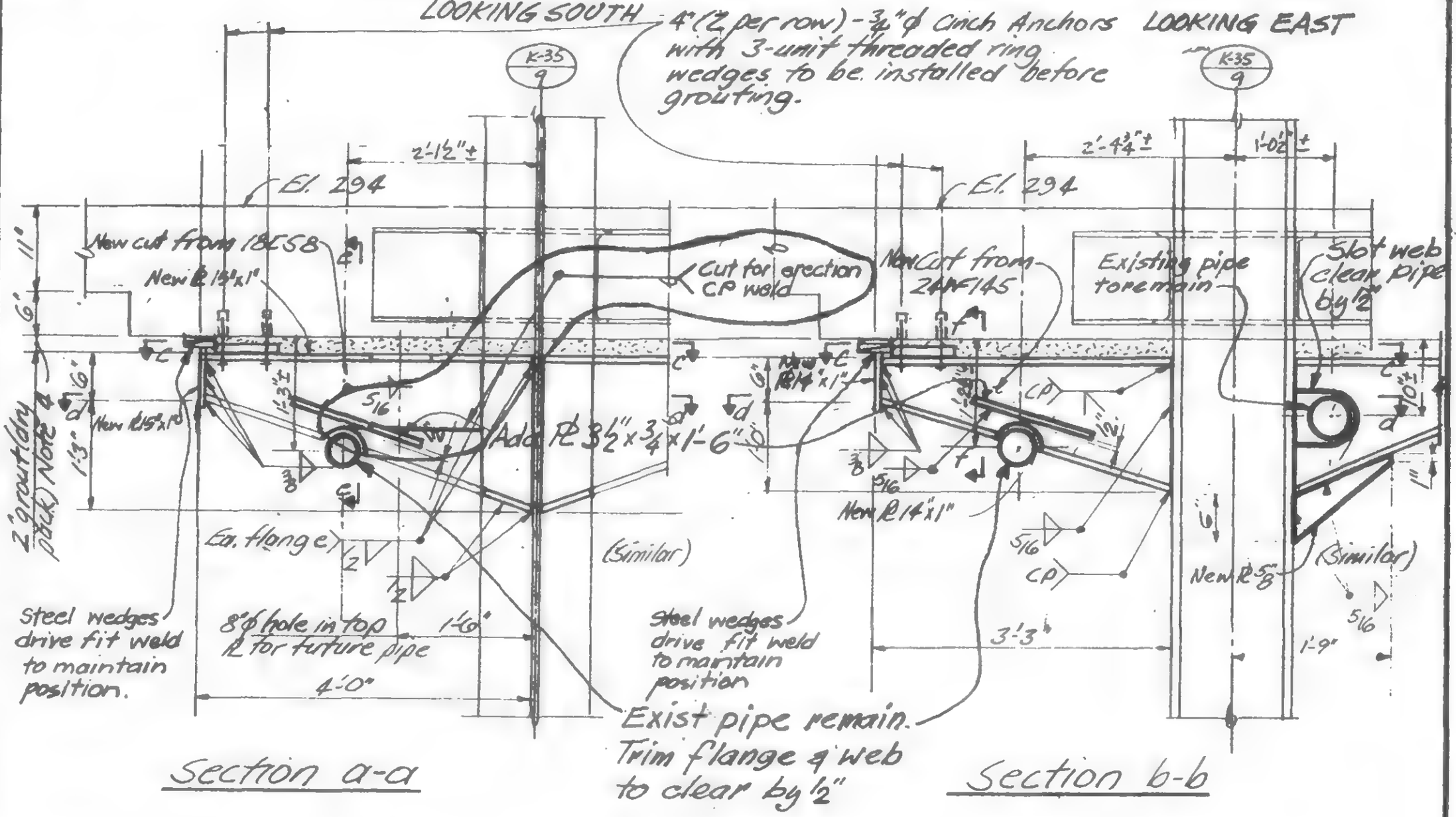


Notes:
1. All material to be fabricated from field measured dimensions.
2. All new steel to be Fy36
3. All electrodes to be E70XX
4. Grout to achieve 100% contact between plates and existing drop panel. Grout to be premixed Embeco grout mixed to flowable consistency and placed in conformance with manufactures written directions
5. Provide erection aides as required

LICENSED PROFESSIONAL ENGINEER — LESLIE E. ROBERTSON — No 34960 — UNIVERSITY OF THE STATE OF NEW YORK

SIGNED
DRAWN
REVIEWED

K 35/9
19-K-1055.1

SKILLING, HELLE, CHRISTIANSEN, ROBERTSON — Structural & Civil Engineers

PROJECT: THE WORLD TRADE CENTER | TITLE: DETAIL FOR SHEAR HEAD REPAIR K-35/8 | DATE: 8-31-72

REVISIONS

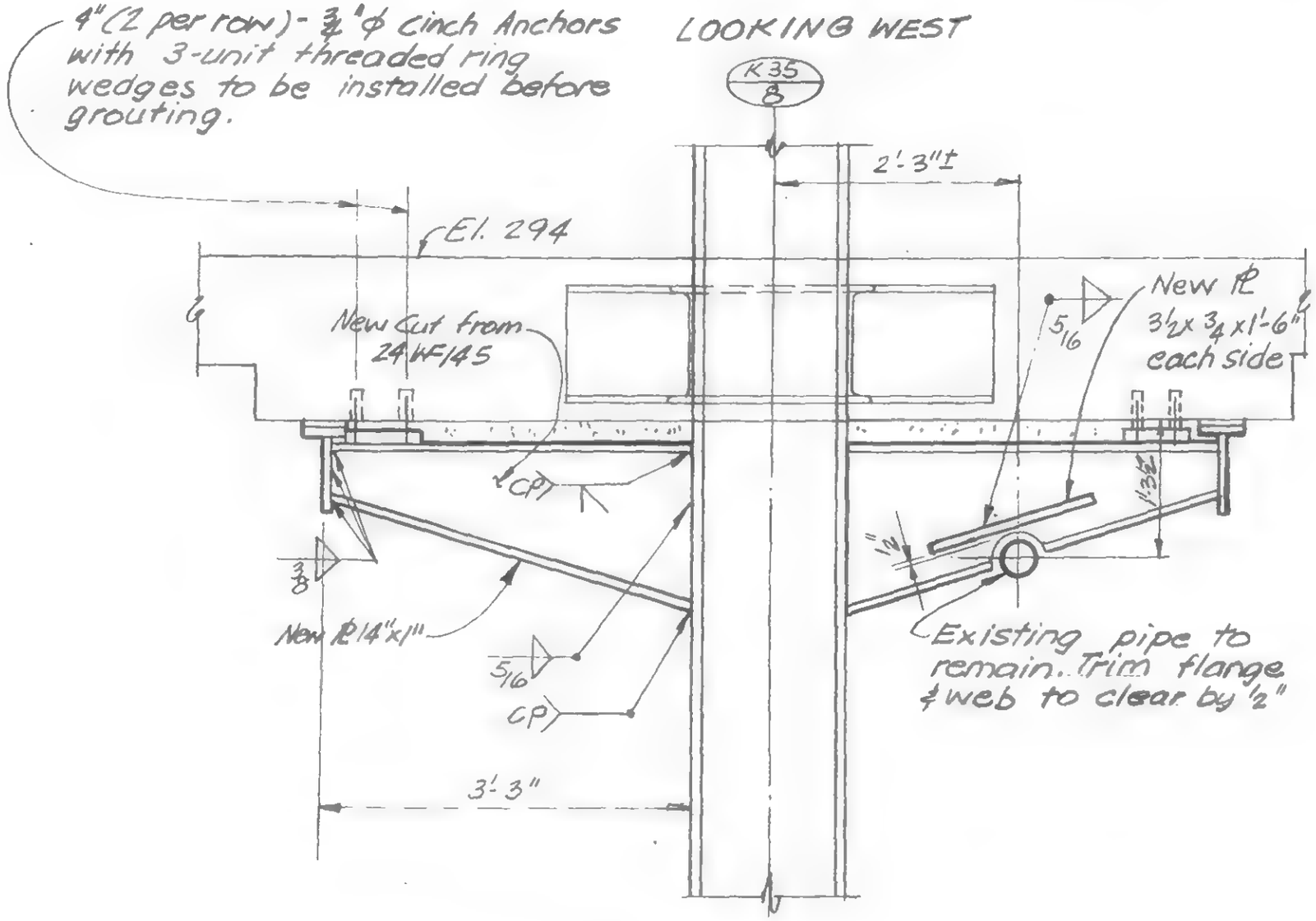


Section b-b

Notes:

1. All material to be fabricated from field measured dimensions.
2. All new steel to be Fy36.
3. All electrodes to be E70XX
4. Grout to achieve 100% contact between plates and existing drop panel. Grout to be premixed Embeco grout mixed to flowable consistency and placed in conformance with manufacturer's written directions.
5. Provide erection aides as required.

LICENSED PROFESSIONAL ENGINEER LESLIE E. ROBERTSON No. 34360 UNIVERSITY OF THE STATE OF NEW YORK

SIGNED

DRAWN

REVIEWED

K-35/8

19-K-1055.1

SKILLING, HELLE, CHRISTIANSEN, ROBERTSON — Structural & Civil Engineers

| PROJECT | TITLE | DATE |
|---|---|---|
| THE WORLD TRADE CENTER | DETAIL FOR SHEAR HEAD REPAIR K35/6 & K35/7 | 12-23-71 |

| Revisions |
|---|
| 1-5-72 |
| 6-30-72 |
| 5-4-73 |

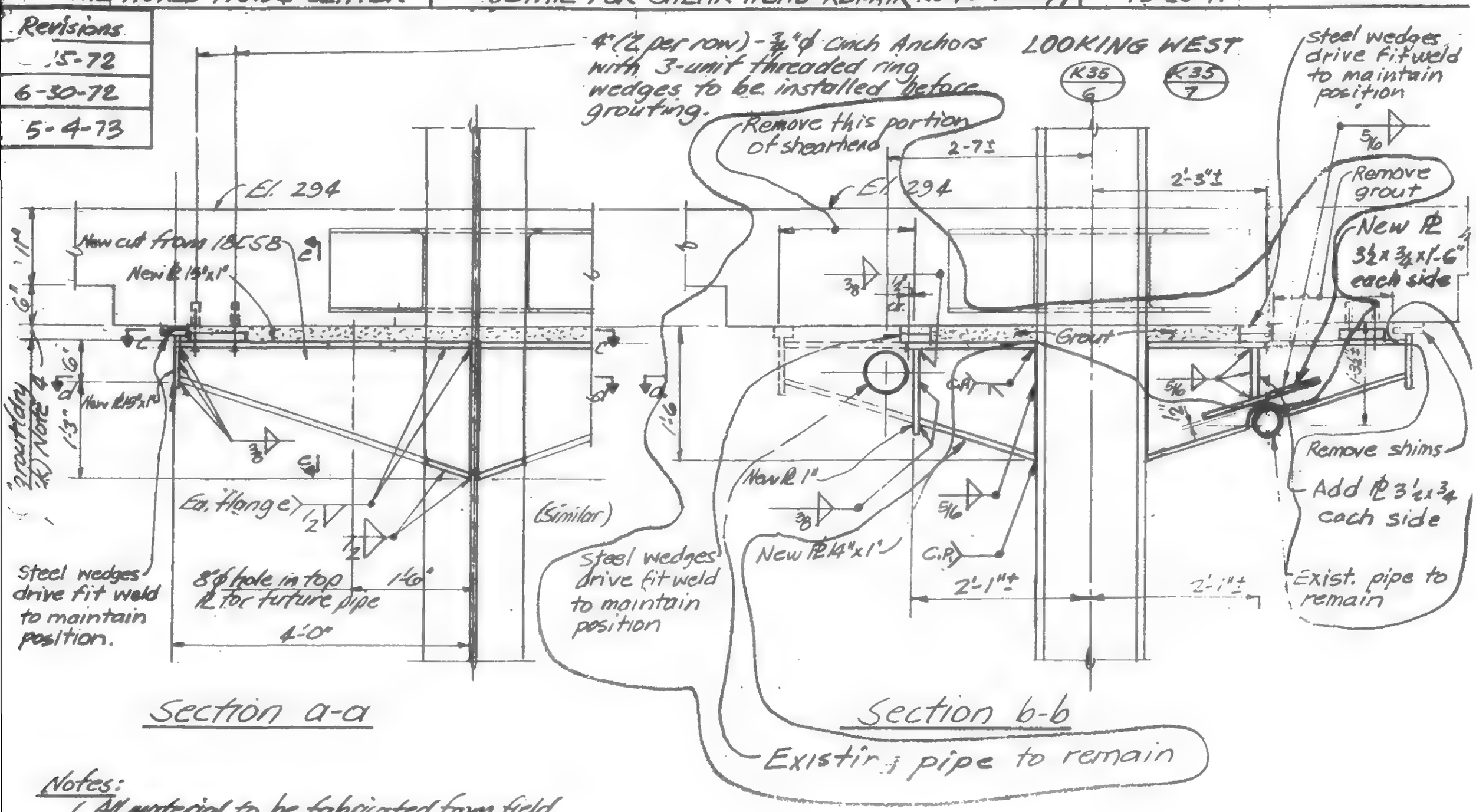


Section a-a

Section b-b

Notes:

1. All material to be fabricated from field measured dimensions.
2. All new steel to be Fy36
3. All electrodes to be E70XX
4. Grout to achieve 100% contact between plates and existing drop panel. Grout to be premixed Embeco grout mixed to flowable consistency and placed in conformance with manufactures written directions
5. Provide erection aides as required

K35/6 & K35/7

19-K-1055.1

SKILLING, HELLE, CHRISTIANSEN, ROBERTSON · Structural & Civil Engineers

PROJECT: THE WORLD TRADE CENTER | TITLE: DETAIL FOR SHEAR HEAD REPAIR K35/5 | DATE: 12-23-71

| Revisions |
|---|
| 15-72 |
| 6-30-72 |
| 5-4-73 |

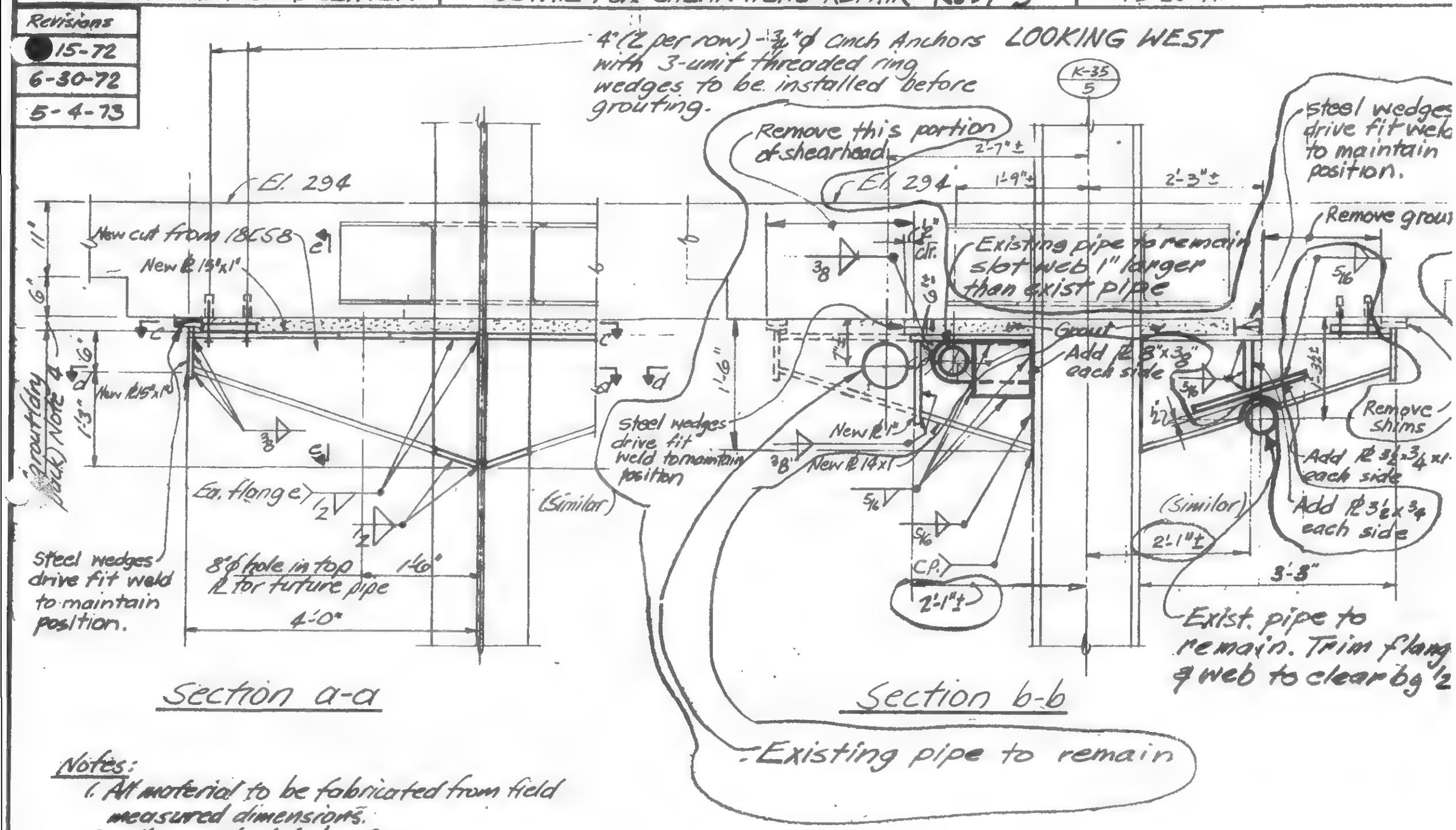


Notes:

1. All material to be fabricated from field measured dimensions.
2. All new steel to be Fy36
3. All electrodes to be E70XX.
4. Grout to achieve 100% contact between plates and existing drop panel. Grout to be premixed Embeco grout mixed to flowable consistency and placed in conformance with manufactures written directions
5. Provide erection aides as required

K35/5

19-K-1053.1

SKILLING, HELLE, CHRISTIANSEN, ROBERTSON — Structural & Civil Engineers

PROJECT: THE WORLD TRADE CENTER | TITLE: DETAIL FOR SHEAR HEAD REPAIR K35/4 | DATE: 12-23-71

| REVISIONS |
|---|
| 12 |
| 6-30-72 |
| 8-31-72 |
| 5-4-73 |

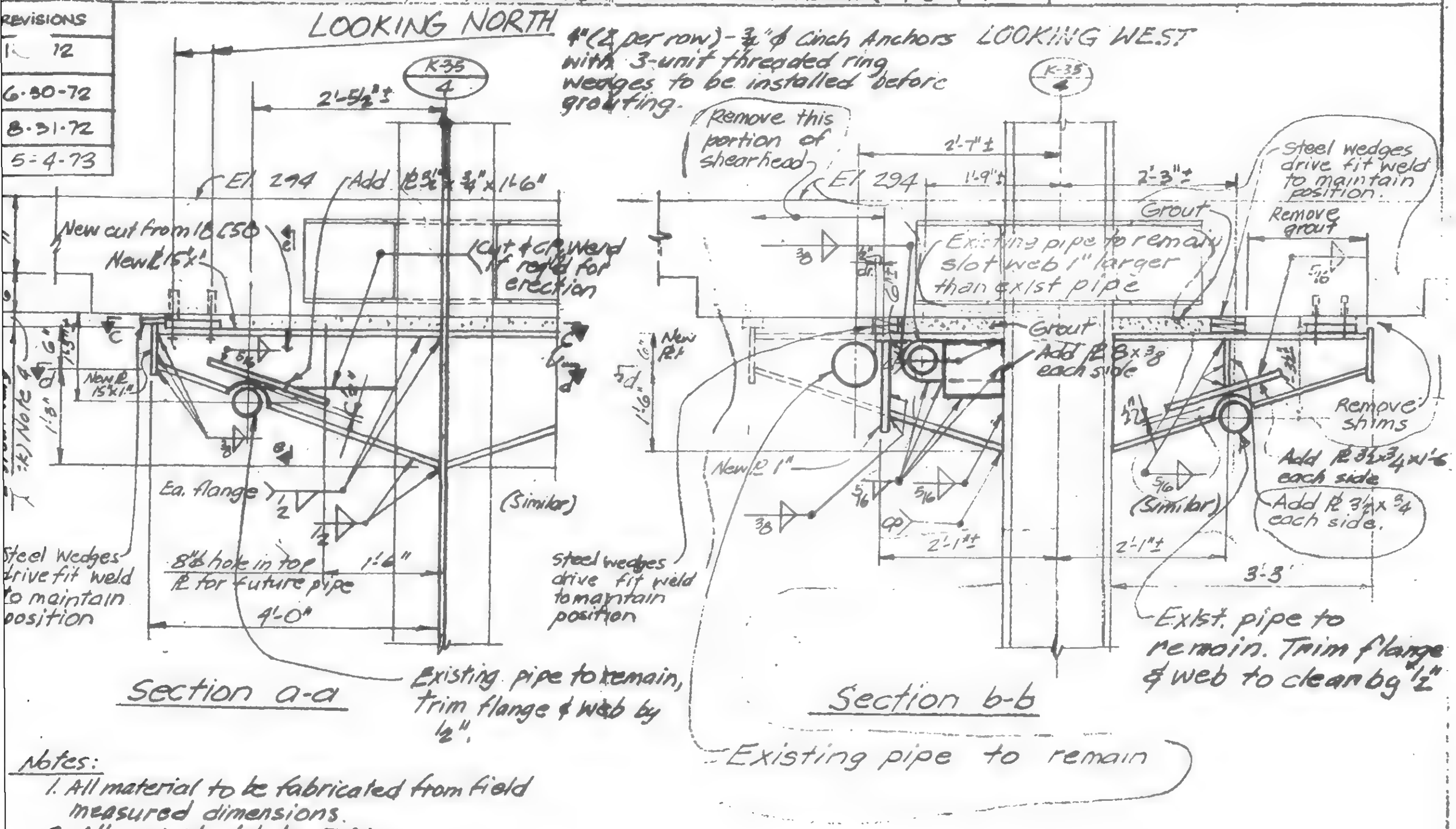


Notes:

1. All material to be fabricated from field measured dimensions.
2. All new steel to be Fy36
3. All electrodes to be E70xx
4. Grout to achieve 100% contact between plates and existing drop panel. Grout to be premixed Embeco grout mixed to flowable consistency and placed in conformance with manufacturers written directions
5. Provide erection aides as required.

K 35/4

19-K-1055.1

SKILLING, HELLE, CHRISTIANSEN, ROBERTSON — Structural & Civil Engineers

PROJECT: THE WORLD TRADE CENTER | TITLE: DETAIL FOR SHEAR HEAD REPAIR - K35/2 | DATE: 12-23-71

REVISIONS

1-15-72 Gen. Rev.

6-30-72

5-4-73

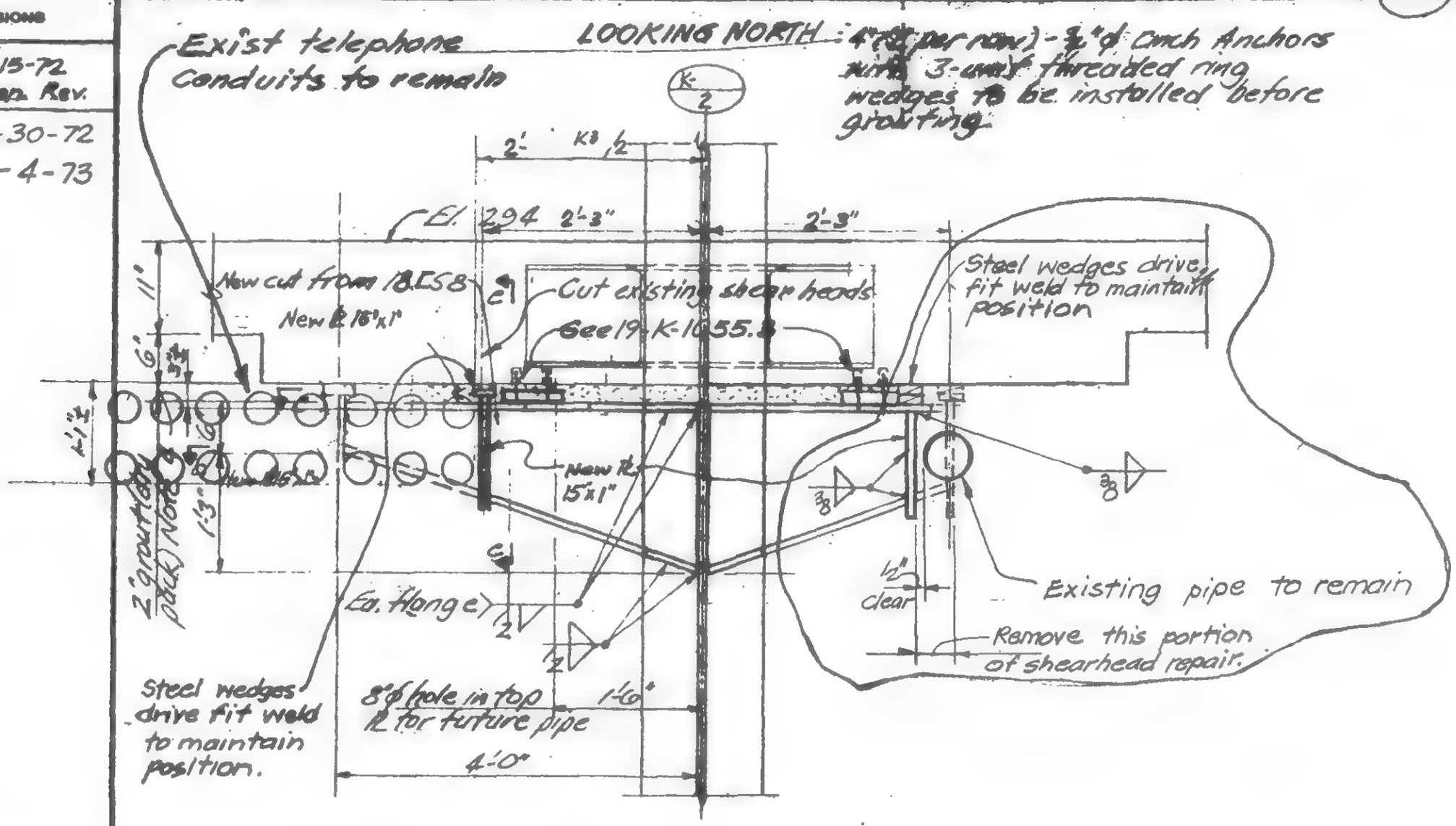


Section a-a

Notes:

1. All material to be fabricated from field measured dimensions.
2. All new steel to be Fy36
3. All electrodes to be E70XX
4. Grout to achieve 100% contact between plates and existing drop panel. Grout to be premixed Embeco grout mixed to flowable consistency and placed in conformance with manufactures written directions
5. Provide erection aides as required

K35/2

19-K-1055.1

SKILLING, HELLE, CHRISTIANSEN, ROBERTSON — Structural & Civil Engineers

PROJECT: THE WORLD TRADE CENTER | TITLE: DETAIL FOR SHEAR HEAD REPAIR - K31/6 | DATE: 12-23-71

REVISIONS

1-14-72 Gen. Rev.

6-30-72 R

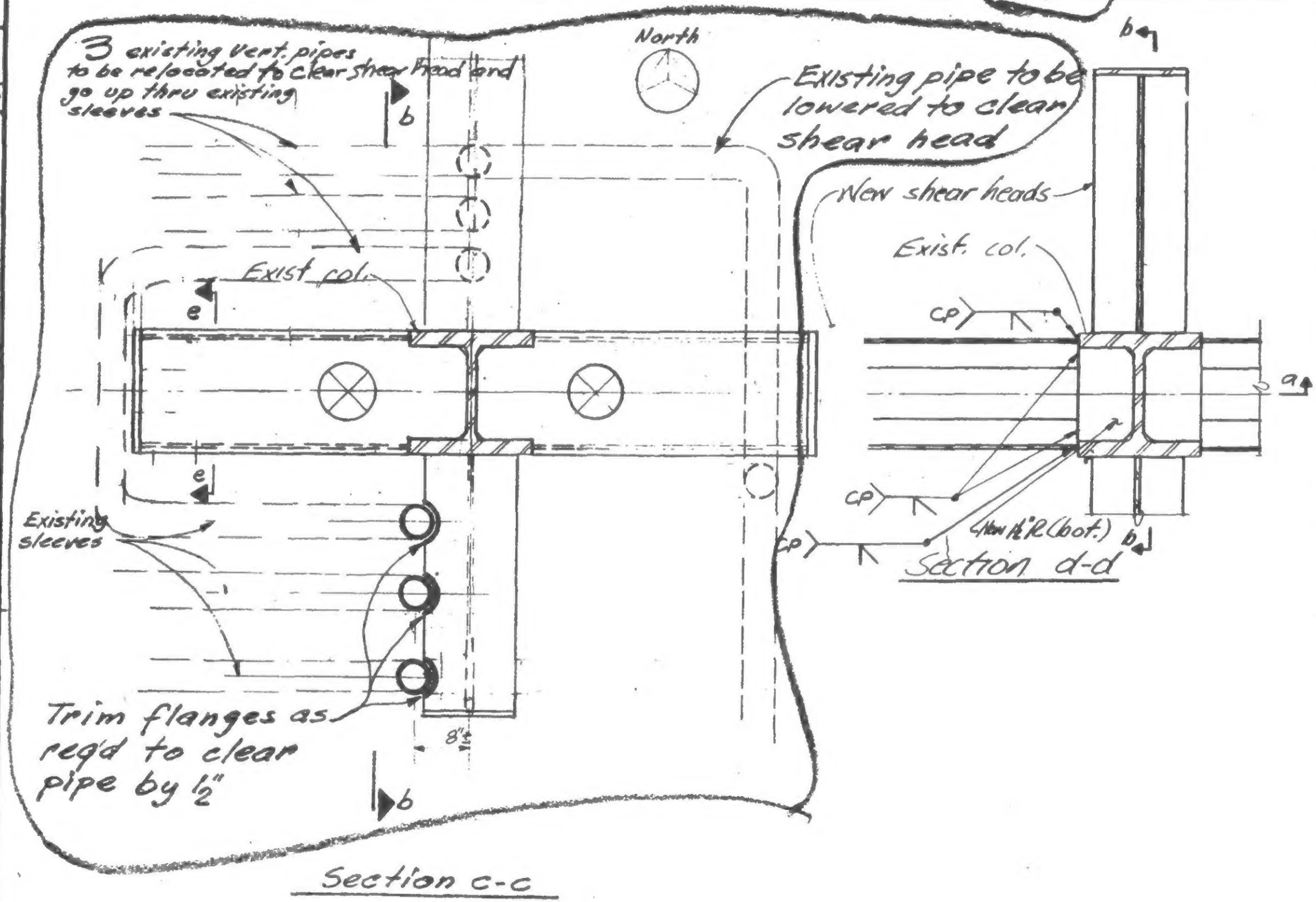


LICENSED PROFESSIONAL ENGINEER — LESLIE E. ROBERTSON — No 34360 — UNIVERSITY OF THE STATE OF NEW YORK

ISSUED

DRAWN

REVIEWED

K31/6

19-K-1055.2

SKILLING, HELLE, CHRISTIANSEN, ROBERTSON — Structural & Civil Engineers

| PROJECT | TITLE | DATE |
|---|---|---|
| THE WORLD TRADE CENTER | DETAIL FOR SHEAR HEAD REPAIR - K31/6 | 12-23-71 |

| Revisions |
|---|
| 1-7-72 |
| 6-30-72 R |

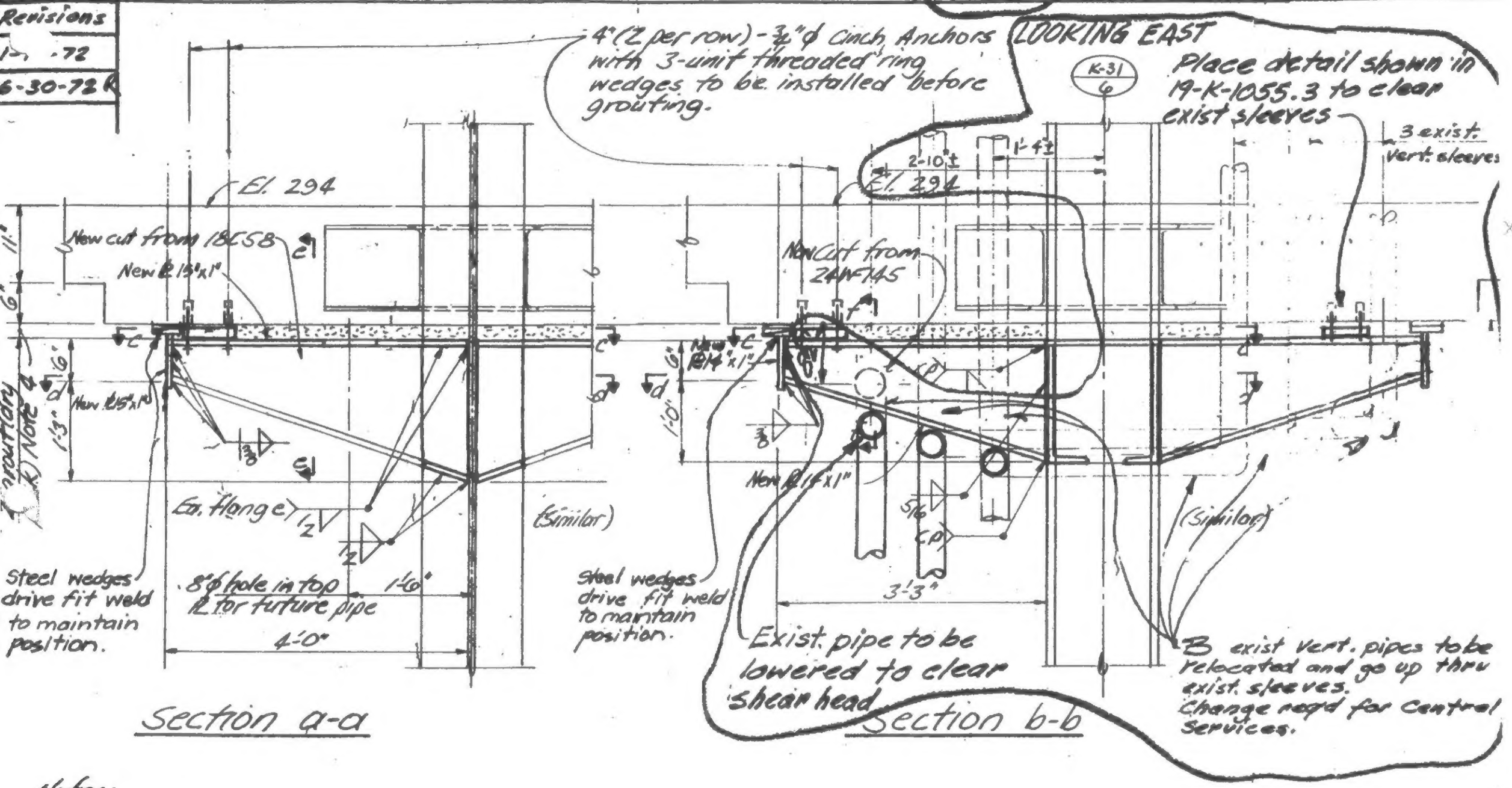


Notes:

1. All material to be fabricated from field measured dimensions.
2. All new steel to be Fy36
3. All electrodes to be E70XX
4. Grout to achieve 100% contact between plates and existing drop panel. Grout to be premixed Embeco grout mixed to flowable consistency and placed in conformance with manufactures written directions
5. Provide erection aides as required

| |
|---|
| K 31/6 |
| 19-K-1055.1 |

SKILLING, HELLE, CHRISTIANSEN, ROBERTSON — Structural & Civil Engineers

PROJECT: THE WORLD TRADE CENTER | TITLE: DETAIL FOR SHEAR HEAD REPAIR K31/3 | DATE: 12-23-71

REVISIONS

1-15-72 Gen. Rev.

6-30-72

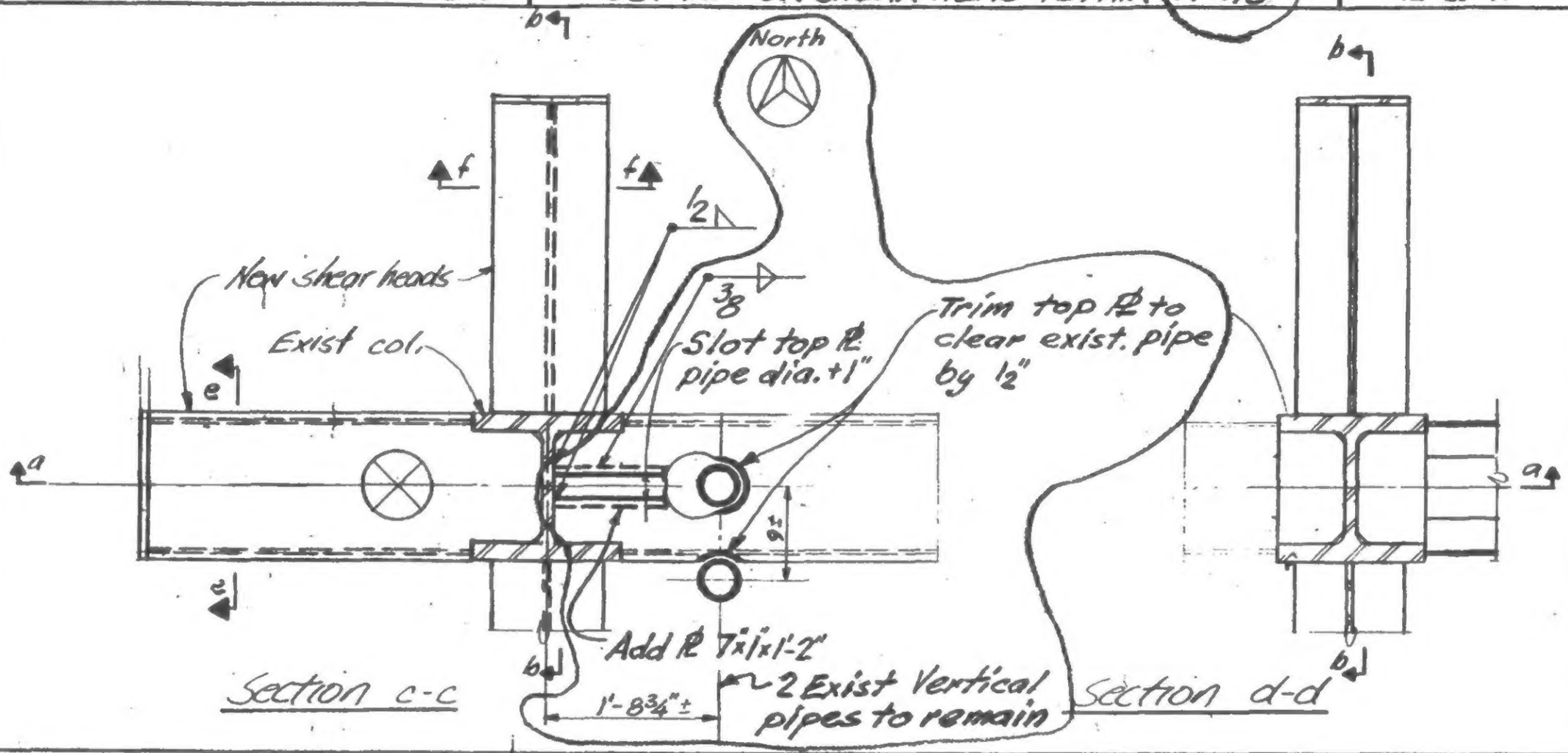


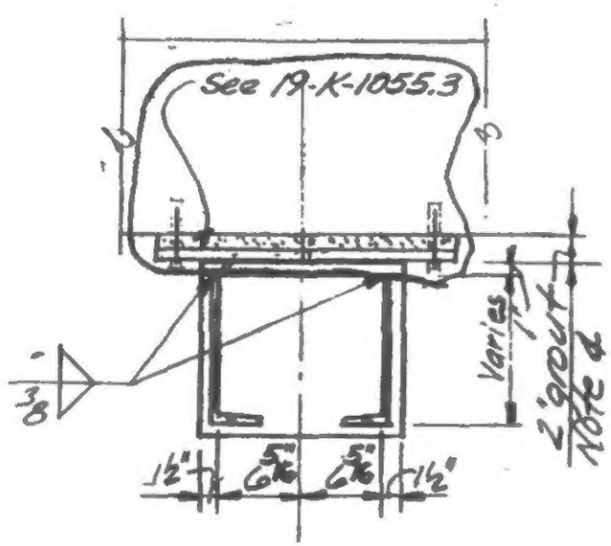


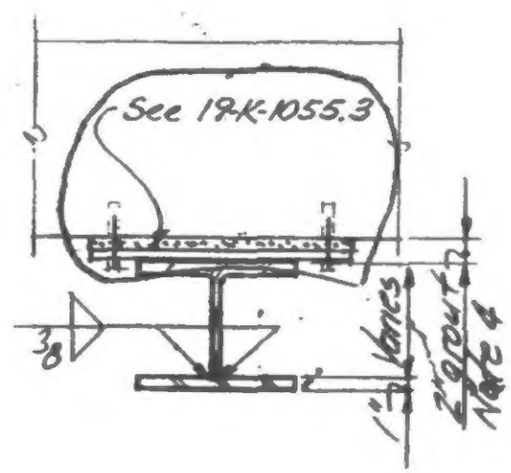


LICENSED PROFESSIONAL ENGINEER — LESLIE E. ROBERTSON — No 34360 — UNIVERSITY OF THE STATE OF NEW YORK

ASSIGNED

DRAWN

REVIEWED

K31/3

19-K-1055.2

SKILLING, HELLE, CHRISTIANSEN, ROBERTSON — Structural & Civil Engineers

| PROJECT | TITLE | DATE |
|---|---|---|
| THE WORLD TRADE CENTER | DETAIL FOR SHEAR HEAD REPAIR K31/5 | 12-23-71 |

| REVISIONS |
|---|
| 1-15-72 Gen. Rev. |
| 6-30-72 |
| 8-31-72 |

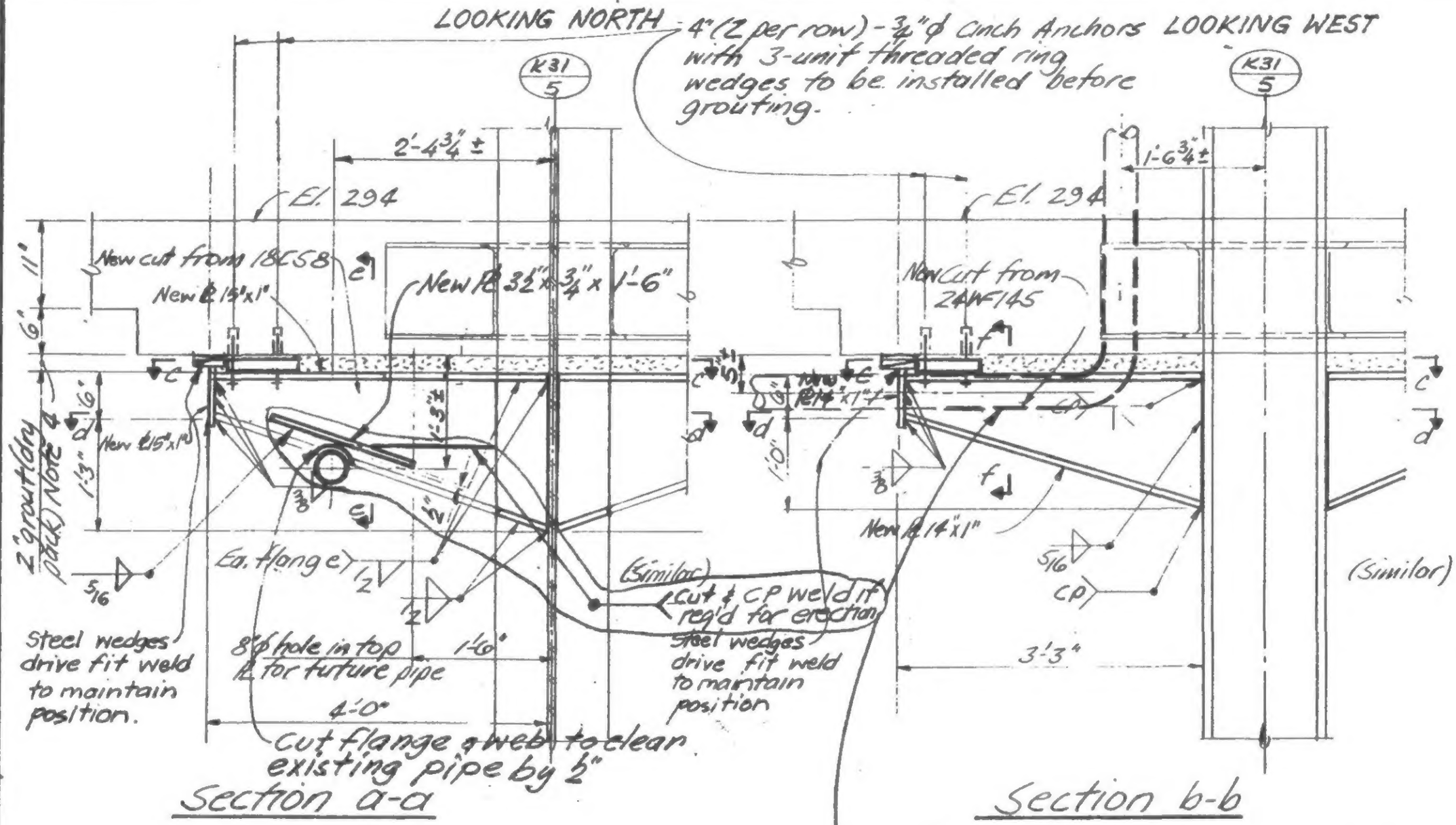


Notes:

1. All material to be fabricated from field measured dimensions.
2. All new steel to be Fy36
3. All electrodes to be E70XX
4. Grout to achieve 100% contact between plates and existing drop panel. Grout to be premixed Embeco grout mixed to flowable consistency and placed in conformance with manufactures written directions
5. Provide erection aides as required

LICENSED PROFESSIONAL ENGINEER — LESLIE E. ROBERTSON — No. 34360 — UNIVERSITY OF THE STATE OF NEW YORK

DESIGNED

DRAWN

REVIEWED

K 31/5

19-K-1055.1